August 2021

A New Connection Type for Use in Intermediate or Special Steel Moment Frames

Michael Kempfert
University of Wisconsin-Milwaukee

A NEW CONNECTION TYPE FOR USE IN INTERMEDIATE OR SPECIAL STEEL MOMENT FRAMES

by

Michael Kempfert

A Dissertation Submitted in

Partial Fulfillment of the

Requirements for the Degree of

Doctor of Philosophy

in Engineering

at

The University of Wisconsin – Milwaukee

August 2021

ABSTRACT

A NEW CONNECTION TYPE FOR USE IN INTERMEDIATE OR SPECIAL STEEL MOMENT FRAMES

by

Michael Kempfert

The University of Wisconsin – Milwaukee, 2021
Under the Supervision of Professor Habib Tabatabai

Moment frames are one way to provide lateral stability to a building structure. For building structures that are located in high seismic regions, specific requirements are presented in applicable building codes pertaining to the moment connections used within these moment frames. The main factor required for these moment connections is their ability to resist cyclic moments at a relatively high drift specified within the applicable building code.

This dissertation investigates the potential development of a new moment connection which would be appropriate for use in Intermediate Moment Frames (IMF) and Special Moment Frames (SMF). Two goals were set for this new moment connection. First, the moment connection would contain yielding elements that are easily replaceable after a seismic event while protecting the elements that are not replaceable. This goal is important as most (9 of 10) of the prequalified moment connections available for use in IMF and SMF systems sacrifice the beam during a major seismic event which could lead to the demolition of the structure. Second, the moment connection would not be a proprietary system. This goal is important as many (5 of 10) of the prequalified moment connections are proprietary systems that require payment for use. Also, proprietary systems tend to lead to less understanding by the engineer

of record of the building structure as calculations for the moment connection are performed by a third party.

The new proposed moment connection will be called the Yielding Threaded Rod, or YTR, moment connection. This connection contains a beam splice located a short distance away from the column to which it is connected. This beam splice has two components. First, a web connection is used to resist the beam shear. This web connection is a standard approved shear connection and is intended to resist shear only. Second, a flange connection is used to resist the beam moment as well as any axial load present in the beam. This flange connection is made with threaded rods connected to the two beam flanges. The threaded rods are sized to resist the forces present in the beam flange while also accommodating the deformations necessary to provide the specified seismic drifts without fracture.

Both physical testing and an analytical model of the new proposed moment connection were carried out. Good correlation was found between the physical specimen and analytical model. Both indicated that the connection would be able to resist the required moments past the specified drifts. Therefore, the new proposed YTR moment connection may be a viable additional moment connection available to engineers for use in IMF and SMF systems.

DEDICATON

Michael Kempfert, P.E.

University of Wisconsin – Milwaukee, 2021

This dissertation is the culmination of years of work and could not have been completed without the help, guidance, and support of many people. I'd like to thank several individuals and companies who were instrumental in helping me complete this dissertation.

I would like to thank my dissertation advisor, Dr. Habib Tabatabai, for his guidance and support during the writing of this dissertation. Dr. Tabatabai's encouragement during this process was essential to its completion.

I would like to thank the members of my dissertation committee, Al Ghorbanpoor, Istvan Lauko, Jian Zhao, and Robert Tremblay. I appreciate the time they took out of their lives to read my dissertation, provide valuable feedback, and attend both my preliminary examination and dissertation defense.

I would like to thank several individuals who helped during the physical testing stage of this project. Rahim Reshadi, Dustin Fester, and Brian Mullen were all instrumental in being able to perform the physical testing including welding and instrumentation of the specimen.

I would also like to thank both Merrill Steel and Germantown Iron for donating materials used during the physical testing. Without their donations, being able to carry out the physical testing would have been unlikely.

Finally, I would like to thank my wife, Becca; my daughter, Natalie, and my son, Will for their support and patience throughout this process. Without them, reaching my goal would not have been possible.

TABLE OF CONTENTS

LIST OF FIGURES

LIST OF TABLES

NOMENCLATURE

A_g Gross cross-sectional area, in.^{2}

A_{gv} Gross area subject to shear, in.^{2}

A_{nt} Net area subject to tension, in.^{2}

A_{nv} Net area subject to shear, in.^{2}

A_{tr} Area of threaded rod, in.^{2}

$B1_V$ Vertical component of the force in the first row of bolts of web connection, kips

$B2_V$ Vertical component of the force in the second row of bolts of web connection, kips

BB_H Horizontal component of the force in the bottom bolts of web connection, kips

BT_H Horizontal component of the force in the top bolts of web connection, kips

C Factor for seismic design

C_a Factor for slenderness determination

C_b Lateral-torsional buckling modification factor for nonuniform moment diagrams when both ends of the segment are braced

C_d Deflection Amplification Factor

C_e Exposure factor

C_f Compressive force in flange, kips

C_p External pressure coefficient

C_{pr} Factor to account for peak connection strength

C_s Seismic Response Coefficient

C_t Approximate period parameter

C_t Thermal factor

C_u Bolt coefficient

C_{vx} Vertical Distribution Factor

D Dead load, kips

D_S Drift of structure from design forces, in.

D_E Drift of structure from elastic response, in.

E Modulus of Elasticity, ksi

(E) Effective weld throat of partial joint penetration weld, in.

E_{mh} Horizontal seismic load effect including Overstrength Factor, kips

E_h Horizontal seismic load, kips

E_v Vertical seismic load, kips

F Iterative bolt group resultant force, kips

F_a Short-period site coefficient

F_f Flange force, kips

F_u Specified minimum tensile strength, ksi

F_v Long-period site coefficient

F_x Lateral seismic force induced at level x

F_{xx} Iterative bolt group resultant force in x direction, kips

F_y Specified minimum yield strength, ksi

F_{yb} Fy of beam, ksi

F_{yc} Fy of column, ksi

F_{yy} Iterative bolt group resultant force in y direction, kips

G Gust effect factor

GC_{pi} Internal Pressure Coefficient

H Story height, in.

I_e Occupancy Importance Factor

J Polar moment of inertia of bolt group, in.^{2}

K Factor for seismic design

K_d Wind directionality factor

K_e Ground elevation factor

K_h Velocity pressure exposure coefficient at eave height

K_z Velocity pressure exposure coefficient

K_{zt} Topographic factor

L Length, in.

L Live load, kips

L_b Maximum spacing between beam bracing, in.

L_{cf} Clear length of beam, in.

L_h Distance between plastic hinge locations, in.

L_r Roof live load, kips

M_a Required flexural strength using ASD load combinations, k-in.

M_{av} Additional moment due to shear amplification from the location of the plastic hinge to the column centerline based on ASD load combinations, k-in.

M_f Probable maximum moment at face of column, k-in.

M_n Nominal moment capacity, k-in.

M_{NS} Required moment capacity due to non-seismic load combinations, k-in.

M_o Moment about the centroid of bolt group, k-in.

M_p Iterative moment in bolt group about instantaneous center, k-in.

M_p Plastic moment capacity, k-in.

M_{pb} Mp of beam, k-in.

M_{pc} Mp of column, k-in.

M_{pe} Plastic moment of beam base on the expected yield stress, k-in.

M_{pr} Probable maximum moment at plastic hinge, k-in.

M_r Required flexural strength, k-in.

M_u Required flexural strength using LRFD load combinations, k-in.

M_{uv} Additional moment due to shear amplification from the location of the plastic hinge to the column centerline based on LRFD load combinations, k-in.

N_{tr} Number of threaded rods

P_a Required axial strength using ASD load combinations, kips

P_{ac} Pa of column, kips

P_c Available axial strength of column, kips

P_n Nominal axial strength, kips

P_{rc} Required compressive strength of column using ASD or LRFD load combinations, kips

P_u Required axial strength using LRFD load combinations, kips

P_{uc} Pu of column, kips

P_x Force in x direction, kips

P_y Force in y direction, kips

P_y Nominal axial yield strength, kips

R Force in bolt, kips

R Radius of cut, in.

R Response Modification Factor

R_n Nominal strength, kips

R_{ult} Ultimate shear strength of one bolt, kips

R_x Force in bolt in x direction, kips

R_y Force in bolt in y direction, kips

R_y Ratio of expected yield stress to specified minimum yield stress

R_{yb} Ry for beam

R_{yc} Ry for column

S Snow load, kips

S_1 Distance from the column face to the first row of bolts, in.

S_1 Mapped spectral response acceleration parameter at 1s period, g

S_{D1} Design spectral response acceleration parameter at 1s period, g

S_{DS} Design spectral acceleration parameter at short periods, g

S_h Distance from the column face to the plastic hinge, in.

S_{M1} Spectral response acceleration parameter at 1s period, g

S_{MS} Spectral response acceleration parameter at short periods, g

S_s Mapped spectral response acceleration parameter at short periods, g

T Fundamental building period, sec.

T_a Approximate fundamental building period, sec.

T_a Required tension strength using ASD load combinations, kips

T_L Long-period transition period, sec.

T_{pt} Total pretension load applied to threaded rods, kips

T_r Total tension force in threaded rods, kips

T_u Required tension strength using LRFD load combinations, kips

U_{bs} Tension uniformity factor

V Basic wind speed, mph

V Seismic base shear, kips

V_E Seismic base shear based on elastic response, kips

V_a Required shear strength using ASD load combinations, kips

$V_{gravity}$ Beam shear force resulting from the 1.2D+f_1L+0.2S load combination, kips

V_h Beam shear force at plastic hinge location, kips

V_n Nominal shear strength, kips

V_{RBS} Shear force at the center of the reduced beam section, kips

V_S Seismic base shear used for design, kips

V_u Required shear strength using LRFD load combinations, kips

V_Y Seismic base shear of fully yielded structure, kips

W Effective seismic weight of the structure, kips

W Wind load, kips

Z Gross plastic section modulus, in.^{3}

Z_b Z of beam, in.^{3}

Z_c Z of column, in.^{3}

Z_n Net plastic section modulus, in.^{3}

Z_{RBS} Z of reduced beam section, in.^{3}

a Distance from face of column to start of reduced beam section cut, in.

a_x Iterative distance to instantaneous center of bolt group from centroid along the x-axis, in.

a_y Iterative distance to instantaneous center of bolt group from centroid along the y-axis, in.

b Distance measured along width of plate element from one edge of connected element to the farthest support, in.

b Length of reduced beam section cut, in.

b_{bf} Flange width of beam, in.

b_{cf} Flange width of column, in.

b_f Flange width, in.

c Depth of cut at center of reduced beam section, in.

d Depth of member, in.

d Distance from bolt to instantaneous center, in.

d Bolt diameter, in.

d_b Depth of beam, in.

d_i *Deformation of ith bolt, in.*

d_{max} Maximum deformation of bolt, in.

d_x Distance from bolt to instantaneous center in x direction, in.

d_y Distance from bolt to instantaneous center in y direction, in.

d_z $d-2t_f$ of deeper beam at the connection, in.

e_{rod} Distance from center of threaded rod to face of beam flange, in.

f_1 *Live load reduction factor*

f_r Resultant force per linear inch of weld due to applied forces, k/in.

f_t Pretension force applied to threaded rod, kips

f_t Tension per linear inch of weld due to applied force, k/in.

f_v Shear per linear inch of weld due to the applied force, k/in.

h Clear distance between flanges less the fillet, in.

h_i Height from the base of the structure to level i, in.

h_o Distance between flange centroids, in.

h_x Height from the base of the structure to level x, in.

k Distance from outer face of flange to the web toe of fillet, in.

k Exponent Based on the Structure's Period

l_c Clear distance, in the direction of the force, between the edge of the hole and the edge of the adjacent hoe or edge of material, in.

l_e Distance between center of threaded rod and center of opposite beam flange, in.

l_p Plate length, in.

$l_{rod,min}$ Minimum required length of threaded rod, in.

l_s Slot length, in.

l_w Weld length, in.

n Number of bolts in bolt group

p Wind pressure, psf

p_f Flat roof snow load, psf

p_m Minimum snow load, psf

p_g Ground snow load, psf

q_h Velocity pressure at roof eave height, psf

q_z Velocity pressure, psf

r_y Radius of gyration about the y-axis, in.

s Spacing of bolt rows, in.

t_{bf} Thickness of beam flange, in.

t_{cf} Minimum required thickness of column flange when no continuity plates are provided, in.

t_f Flange thickness, in.

t_w Web thickness, in.

w Fillet weld leg size, in.

w_{eff} Effective width, in.

w_i Portion of the effective seismic weight at level i, kips

w_x Portion of the effective seismic weight at level x, kips

w_z Width of panel zone between column flanges, in.

x_o	Centroid of bolt group along x-axis, in.
y_o	Centroid of bolt group along y-axis, in.
Δ	Deformation of bolt, in.
Ω_c	Safety factor for compression
Ω_o	Overstrength Factor
θ	Story drift angle, radians
δ	Deformation, in.
ϵ	Strain
ϕ	Resistance factor
ϕ_c	Resistance factor for compression
ϕ_d	Resistance factor for ductile limit states
ρ	Redundancy factor

CHAPTER 1

INTRODUCTION, OBJECTIVES, AND SCOPE

1.1. Introduction

Building structures must be designed with due consideration to the loads imposed on them, including gravity, wind, and seismic loads, among others. The minimum loads for which a building structure is to be designed is prescribed in the applicable building code. A building structure that is correctly designed per the applicable building code will be expected to maintain life safety during its service life. As stated in Section 101.3 of the 2018 International Building Code (International Code Council, 2017), "The purpose of this code is to establish the minimum requirements to provide a reasonable level of safety, public health, and general welfare through structural strength…" In addition to ensuring life safety, the building structure should also experience no appreciable damage or permanent deformations when subjected to service-level gravity and wind loads. To accomplish this, the building structure is generally designed in such a way that it will exhibit an elastic response to the imposed service-level gravity and wind loads. Contrary to this elastic design approach, economic concerns make it impractical to design most building structures to accommodate potential seismic forces without damage.

In recognition of this, standard practice has been to design building structures on the presumption that some level of damage, without collapse, is acceptable when the building

structure is subject to a design level earthquake. The overall goals then are to prevent collapse of the building structure and to preserve life safety. The resulting non-linear analysis to account for inelastic behavior in a structure can be complex. Therefore, a simplified design approach (applicable to non-complex structures) included in most current building codes in the United States is to use a linear elastic building model to determine the seismic base shear and corresponding forces on the building structure. These forces are then adjusted (reduced) using a Response Modification Factor (*R* factor). The magnitude of this factor varies with the inherent overstrength of the building structure and the level of ductility in that structure. Systems with higher levels of inherent overstrength and ductility are intended to have higher *R* values. In addition to the *R* factor, there are two additional factors that are used in this design approach. The first is the deflection amplification factor (C_d) which is used to estimate the maximum lateral drift in the structure due to the expected inelastic behavior. Lateral seismic drifts calculated from an elastic model based on the *R* factor-adjusted seismic forces are multiplied by this factor to determine the total expected lateral drift due to a design level earthquake. The second additional factor is the system overstrength factor (Ω_o). This factor is essentially the ratio of collapse load to design load for a given structure. This ensures that force-controlled members are designed for realistic seismic forces even when analyzed with a linear elastic model.

These seismic performance factors (R, C_d, Ω_o) are tabulated in the 2016 edition of Minimum Design Loads for Buildings and Other Structures (American Society of Civil Engineers, 2017) (ASCE 7-16). Currently, ASCE 7-16 contains 85 different building system types; each having differing combinations of the R, C_d, and Ω_o factors. Along with these factors, ASCE 7-16

specifies height limits and detailing requirements that must be applied to the building systems listed. Each of the building systems listed in ASCE 7-16 have reasonably predictable behavior when subjected to ground motion. Because of this, specific members in the building system can reliably be designated as yielding members. These members are intended to dissipate most of the energy associated with an earthquake by experiencing inelastic deformations in specific locations. In order to ensure that the system behaves as intended, special detailing requirements are specified for the designated yielding member and its connection to the surrounding structure. Also, the surrounding members in the structure are designed at force levels consistent with the capacity of the designated yielding member.

1.2. Motivation and Objectives for Research

One commonly used type of building system designated in ASCE 7-16 is the steel moment frame. In this type of system, moment connections are made between the steel beams and supporting steel columns. These moment connections provide the lateral stability required to prevent collapse of the framing system. There are currently three separate types of steel moment frame systems designated in ASCE 7-16. These are the Steel Ordinary Moment Frame, Steel Intermediate Moment Frame, and Steel Special Moment Frame. These three types of moment frames all have different R, C_d, and Ω_o values as well as associated detailing requirements, and will be discussed in greater detail later.

The detailing requirements that moment connections must adhere to in order to be used in the moment frame systems mentioned above are prescribed in the American Institute of Steel Construction's (AISC) Seismic Provisions for Structural Steel Buildings (AISC, 2016b)

(AISC 341-16). While the requirements for moment connections to be used in a Steel Ordinary Moment Frame are minimal, the requirements for use in either a Steel Intermediate Moment Frame or Steel Special Moment Frame are quite stringent. One way to meet the requirements specified in this provision is to utilize a prequalified connection. A prequalified connection is a connection type that has been shown through testing to meet the requirements set forth in this provision. These prequalified connections, and their associated requirements, are found in AISC's Prequalified Connections for Special and Intermediate Steel Moment Frames for Seismic Applications (AISC, 2016a) (AISC 358-16). Currently, the options for moment connection types found in this document are limited to 10 connection types; these moment connection types will be discussed in greater detail below. Unfortunately, these available moment connection types have several drawbacks associated with their use. First, although several of the connection types are common in the construction industry, and are thus fairly easy to fabricate and install, these connection types are not easily replaceable after a major seismic event. Therefore, a large effort is required to make the building safe and operational after a seismic event. Second, although several of the remaining connection types may be replaceable after a seismic event, they are proprietary connections which require special fabrication practices to implement their use. These also require payment to a third party for their use.

The purpose of this research then is to develop a new type of moment connection that can be used in the three types of steel moment frames mentioned above. This new connection type is intended to meet or exceed all the seismic requirements currently in place for these systems. It is also intended to not only be easily fabricated and installed, but to also be easily

replaceable (renewable) after a seismic event. The combination of these characteristics provides a key benefit over the currently available moment connection types.

1.3. Scope of Research

The research consisted of several tasks. Frist, an extensive literature review was performed. This literature review not only explored the general history and current state of seismic design within the United States but also covered the existing prequalified moment connections which can be used in Intermediate and Special Moment Frame systems.

Second, a new proposed type of moment connection has been developed. A design procedure is outlined for this new moment connection type. This design procedure follows the basic outline used in other prequalified moment connections.

Third, a physical specimen was designed based on the design procedure mentioned above. This specimen was then tested at the Structural Engineering Laboratory of the University of Wisconsin – Milwaukee. Experimental data was collected and analyzed based on this test.

Finally, an analytical model was created representing the physical test specimen. Data collected from this analytical model was analyzed and compared to the physical test results. All of these tasks are discussed in greater detail in Chapters 2 through 7.

CHAPTER 2

LITERATURE REVIEW

2.1. Literature Review

This literature review is intended to provide an accurate picture of current practices in the structural engineering community in regard to seismic design of steel moment frames. In addition, literature relating to the development of the current design practices is included. Also, literature specific to moment connection design and testing as it relates to seismic design is presented.

2.1.1. General History of Seismic Design in the United States

The paper MODERN EARTHQUAKE CODES, History and Development, A Historical Review from an Eye Witness (McClure, 2006) provides an in-depth look at the development of current seismic design practices in the United States. A summary of this paper and the important events that contributed to current seismic design methodologies is included below.

The San Francisco earthquake of April 18, 1906 perhaps triggered the beginning for the inclusion of seismic forces in the design of building structures; in fact, there were no formal recorded building regulations that included any earthquake provisions until after this earthquake. When seismic provisions started appearing in codes, they initially prescribed that a minimum horizontal uniform load, similar to wind loading, be applied to the building to account for the forces resulting from a seismic event. This approach was altered after a 1923

earthquake in Japan. After this earthquake, it was noticed that buildings designed for a percentage of gravity load performed better than buildings designed by the previous approach. The first United States codes to use this newer approach were the Palo Alto Code and the 1927 Uniform Building Code.

The next major change in how building codes prescribed lateral loads for seismic forces came about in 1960. In this year, the Structural Engineers Association of California (SEAOC) released a report that was adopted by the Uniform Building Code in 1961 as well as several municipalities throughout California. Included in this report was an evaluation of the period of the building (T); a new factor, C, was also introduced as a function of T. Another new factor, K, was also introduced which considered the arrangement and type of lateral force resisting elements. The base shear, V, was then calculated as $V=KCW$ with W being equal to the dead load of the building structure. Another distinction to this report was that the base shear was distributed over the height of the building as prescribed by a formula.

Later revisions to the SEAOC report clearly spelled out the intent of the design provisions in the commentary to the report which stated, "…structures designed in conformance with the provisions and principles set forth therein should be able to:

1. Resist minor earthquakes without damage.
2. Resist moderate earthquakes without structural damage, but with some non-structural damage.

3. Resist major earthquakes of the intensity or severity of the strongest experienced in California, without collapse, but with some structural, as well as non-structural damage."

The *K* factor introduced in this SEAOC report mentioned above has evolved into the current *R* factor discussed previously and was first introduced in Tentative Provisions for the Development of Seismic Regulations for Buildings (Applied Technology Council, 1978) (ATC-3-06). These *R* factors have been modified and refined throughout the years and are now presented in ASCE 7-16 as currently prescribed. The Structural Response Modification Factors (Applied Technology Council, 1995) (ATC 19) report summarized the basis of the *R* factors presented in the ATC-3-06 report as well as presenting newer information pertaining to the *R* factors. Per this report:

> The *R* factors for the various framing systems included in the ATC-3-06 report were selected through committee consensus on the basis of (a) the general observed performance of like buildings during past earthquakes, (b) estimates of general system toughness, and (c) estimates of the amount of damping present during inelastic response. (p. 1)

2.1.2. Current Code Provisions for Seismic Design in the United States

The current (2021) building code prevalent throughout the United States is the 2018 edition of the International Building Code (IBC). Per this code, building structures "…shall be designed and constructed to resist the effects of earthquake motions in accordance with…ASCE 7." Per ASCE 7-16, there are three methods that can be used as analytical procedures to

determine the seismic forces used in the design of a building structure. These are the 1) Equivalent Lateral Force Procedure, 2) Modal Response Spectrum Analysis Procedure, and 3) Seismic Response History Procedure. There are certain criteria that must be met to use these procedures; however, the most widely used is the Equivalent Lateral Force Procedure. Therefore, this procedure will be discussed further below.

Per the Equivalent Lateral Force Procedure, the seismic base shear, *V*, is calculated per ASCE 7-16 Equation 12.8-1.

$$V = (C_s)(W)$$

Where *W* is the effective seismic weight and C_s is the seismic response coefficient per ASCE 7-16 Equation 12.8-2.

$$C_S = \frac{S_{DS}}{R/_{I_e}}$$

In this equation, S_{DS} is the design spectral response acceleration parameter for short periods, *R* is the response modification factor discussed previously, and I_e is the occupancy importance factor. All three of these variables can be found is ASCE 7-16. There are also minimum and maximum values of C_s as outlined in ASCE 7-16. These are shown below per ASCE 7-16 Equations 12.8-3, 12.8-4, and 12.8-5.

$$C_S \geq 0.044(S_{DS})(I_e)$$

$$C_S \leq \frac{S_{D1}}{T\left(R/_{I_e}\right)} \; when\; T \leq T_L$$

$$C_S \leq \frac{(S_{D1})(T_L)}{T^2\left(R/_{I_e}\right)} \; when\; T > T_L$$

In these equations, S_{D1} is the design spectral response acceleration parameter at a period of 1 second, T is the fundamental period of the building, and T_L is the long-period transition period.

Once the seismic base shear has been found, it is then distributed vertically over the height of the building by using ASCE 7-16 Equation 12.8-11.

$$F_x = (C_{vx})(V)$$

Where F_x is the lateral seismic force induced at any level (x) of the building structure and C_{vx} is the vertical distribution factor. The vertical distribution factor is calculated per ASCE 7-16 Equation 12.8-12.

$$C_{vx} = \frac{(w_x)(h_x^k)}{\sum_{i=1}^{n}(w_i)(h_i^k)}$$

Where w_i and w_x are the portion of the total effective seismic weight of the structure (W) located or assigned to Level i or x, h_i and h_x are the height from the base to Level i or x, and k is an exponent related to the structure period. k is equal to 1 for structures having periods of 0.5 seconds or less and equal to 2 for structures having periods of 2.5 seconds or greater; k shall either be equal to 2 or found by linear interpolation for structures having periods between 0.5 and 2.5 seconds.

2.1.3. Basis for the Use of Building Seismic Performance Factors

The reason for the use of building seismic performance factors for design purposes is to allow the use of an elastic analysis of a building structure although the structure is, in reality, in the inelastic region. This is intended to allow an engineer to safely design a building structure without performing a much more complex and rigorous nonlinear analysis. This will result, as stated previously, in a building structure that will experience damage and permanent deformations when subjected to a design level earthquake. However, the introduction of the building seismic performance factors (R, C_d, and Ω_o) allows the desired use of an elastic analysis while providing a level of life safety that is deemed acceptable if the building structure were to experience a design level earthquake.

Figure 2.1, which is a reproduction of Figure C4.2-1 from NEHRP Recommended Provisions for Seismic Regulations for New Buildings and Other Structures (Federal Emergency Management Agency, 2004), illustrates the concept and components for the building seismic performance factors. In this figure, V_E represents the base shear that would develop in a building structure from a design level earthquake if the building were to remain elastic throughout the event. If the structure were designed to accommodate this base shear, the structure would experience minimal damage and no appreciable permanent deformations after a design level earthquake. However, this would, in most cases, result in an extremely expensive structure. Therefore, the R factor is introduced into the design of the structure. The building structure is then designed for a base shear of V_S which is equal to V_E/R. Thus, the R factor can be defined as the ratio between the base shear that would develop for an entirely elastic

structure versus the base shear used for design. It should be noted that this figure is representative for a typical frame building structure; the actual configuration of the figure may be different for different building system types; however, the concepts are identical.

During a design seismic event, the structure would be expected to experience yielding; following the force versus deformation curve as defined by the "successive yield hinges" shown in Figure 2.1. This response can be determined from either physical testing or from a pushover analysis and is often called a "backbone curve." The deformation experienced by the building structure during a design seismic event is defined as the "design drift" in Figure 2.1. This amount of drift can be approximated by multiplying the drift predicted by the elastic analysis carried out at the design force level by the deflection amplification factor, C_d. The overstrength factor, Ω_o, is then the ratio of the fully yielded strength of the structure to the design base shear, V_S. Overstrength in the system is associated with design efficiency, material overstrength, and redundancy in the structure.

An appropriate value for the *R* factor is of utmost importance for this procedure to result in a safe building structure. A value for the *R* factor which is too large will result in small design base shears; as a result, the structure may not be able to withstand the resulting deformations before the onset of fracture. This would be an undesirable occurrence as members in the structure not associated with the resistance to the lateral force would be forced to participate; possibly leading to more fractures and an eventual building structure collapse. Conversely, a value for the *R* factor which is too small will result in larger design base

shears. This will possibly lead to an overly conservative design which in turn will lead to a heavier and more expensive structure.

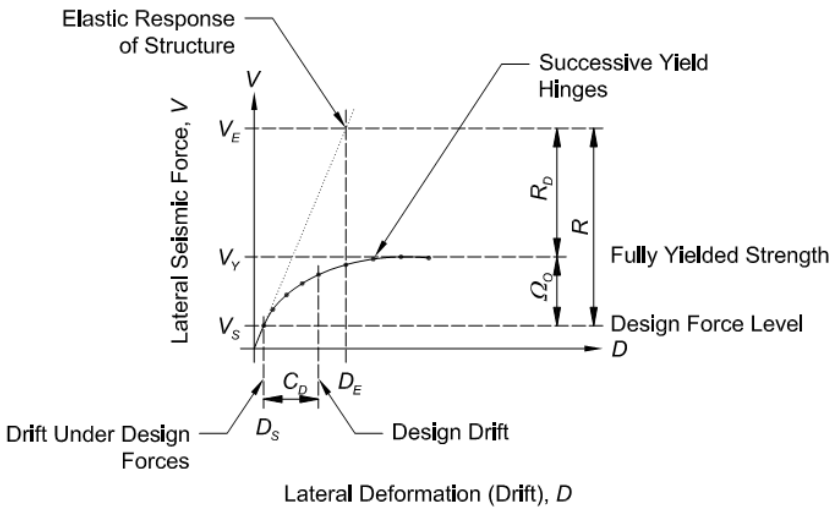

Figure 2.1 – Inelastic Force-Deformation Curve

2.1.4. Current Examples of Seismic Performance Factors

As stated previously, there are currently 85 different building systems contained in ASCE 7-16; each of these systems has a different combination of seismic performance factors as well as detailing requirements and construction limits. Since the focus of this research is on a new steel moment connection type, the three types of steel moment-framed buildings will be discussed in depth. These will be discussed in order of detailing requirements with the least stringent presented first.

2.1.4.1 Ordinary Steel Moment Frame

The first type of steel moment-framed building is the Ordinary Steel Moment Frame (OMF). Per ASCE 7-16, this type of moment frame system has R = 3 ½, C_d = 3, and Ω_o = 3. Also,

ASCE 7-16 does not allow the use of this type of moment frame in Seismic Design Categories D, E, and F. There are several exceptions to this restriction as outlined in ASCE 7-16. Specifically, Ordinary Steel Moment Fames are allowed to be used in Seismic Design Categories D or E when the moment frame is a single-story frame with a height of 65 feet or less and where the roof dead load does not exceed 20 psf. Also, the dead load of the exterior walls more than 35 feet above the base shall not exceed 20 psf. Similarly, Ordinary Steel Moment Frames are allowed to be used in Seismic Design Category F with these same limitations except that the dead load over the entire height of the wall shall not exceed 20 psf.

In addition to these limits outlined in ASCE 7-16, AISC 341-16 also has several requirements that must be followed when utilizing an Ordinary Steel Moment Frame as outlined in Section E1. The first requirement is that all complete-joint-penetration (CJP) welds of beam flanges to columns shall be demand critical welds per Section E1.6a. A weld designated as demand critical signifies that the weld metal used in the weld meet special requirements for toughness as outlined in D1.8/D1.8M:2016 Structural Welding Code – Seismic Supplement (American Welding Society, 2016) clause 6.3. Another requirement of this provision is that the required strength of the moment connection used must meet one of three requirements as outlined in Section E1.6b. These are:

1) The moment connections shall be designed for a required flexural strength, M_r, per AISC 341-16 Section E1.6.b(a).

$$M_r = 1.1(R_y)(M_p)\ for\ LRFD$$

$$M_r = \left(\frac{1.1}{1.5}\right)(R_y)(M_p)\ for\ ASD$$

Also, the required shear strength of the connections shall be based on the capacity-limited seismic load effect. The capacity-limited horizontal load effect, E_{cl}, is found per AISC 341-16 Equation E1-1.

$$E_{cl} = \frac{2[1.1(R_y)(M_p)]}{L_{cf}}$$

In the equations above, R_y is the ratio of expected yield stress to the specified minimum yield stress, M_p is the plastic moment capacity (F_yZ), and L_{cf} is the clear length of the beam.

2) The moment connections shall be designed for moment and shear based upon the maximum moment and corresponding shear that can be transferred to the connection by the system. This should include the effects of material overstrength and strain hardening.
3) The moment connections shall be designed to satisfy the connection requirements of either Intermediate Moment Frames or Special Moment Frames (as discussed below). Alternatively, the moment connections shall meet the following additional requirements:
    a. All welds at the beam-to-column connection shall meet the requirements of AISC 358-16 Chapter 3 (which will be discussed later).
    b. Beam flange to column flange connections shall be made with CJP welds.

c. Weld access holes shall meet the geometry requirements of AWS D1.8 subclause 6.11.1.2. Weld access holes shall also meet the quality requirements of AWS D1.8 subclause 6.11.2.

d. Continuity plate (where required) thicknesses shall be at least one-half of the beam flange thickness when utilized in a one-sided connection; when utilized in a two-sided connection, the continuity plate thickness shall be at least three quarters of the thicker of the two beam flanges connecting to the column. However, the minimum continuity plate thickness shall be equal to its width divided by 16. The width of the continuity plate shall extend to the width of the wider beam as a minimum. Also, the plates shall be welded to the column flanges to develop the available strength of the contact area of the plates with the column flange. The weld of the plates to the column web shall be designed for the smallest of the following:

    i. The sum of the design strengths, in tension, of the contact areas of the plates to the column flanges that are opposed by beam flanges.

    ii. The design strength in shear of the contact area of the plates with the column web.

    iii. The available shear strength of the column web.

e. The beam web shall be connected to the column flange with either a CJP weld or a bolted single plate shear connection which shall be designed for the required shear strength noted above (utilizing E_{cl}).

2.1.4.2 Intermediate Steel Moment Frame

The second type of steel moment-framed building is the Intermediate Steel Moment Frame (IMF). Per ASCE 7-16, this type of moment frame system has R = 4 ½, C_d = 4, and Ω_o = 3. Also, per ASCE 7-16, the height of an Intermediate Steel Moment Frame is limited to 35 feet when used in a Seismic Design Category D and is not allowed to be used in Seismic Design Categories E and F. Similar to the Ordinary Moment Frame system, there are several exceptions to these limits as outlined in ASCE 7-16. Intermediate Steel Moment Frames are allowed to be used in Seismic Design Categories D or E when the moment frame is a single-story frame with a height of 65 feet or less and where the roof dead load does not exceed 20 psf. Also, the dead load of the exterior walls more than 35 feet above the base shall not exceed 20 psf. Furthermore, Intermediate Steel Moment Frames are allowed to be used in Seismic Design Category E with a height less than 35 feet when neither the dead load at the roof nor at any floor level exceeds 35 psf and the dead load of the exterior walls does not exceed 20 psf. Finally, Intermediate Steel Moment Frames are allowed to be used in Seismic Design Category F with the same limitations as when used in Seismic Design Category E except that the dead load of the exterior wall shall not exceed 20 psf.

Again, in addition to these limits outlined in ASCE 7-16, AISC 341-16 also has several requirements that must be followed when utilizing an Intermediate Steel Moment Frame as outlined in Section E2. These requirements are more stringent than those presented for Ordinary Moment Frames as an Intermediate Steel Moment Frame is intended to provide limited inelastic deformation capacity. In order to provide this deformation capacity, the beam-

to-column moment connections are required to be capable of accommodating a story drift angle of at least 0.02 radians. The connection itself should also be capable of developing $0.80M_p$ of the beam at this story drift angle. In order to verify that connections which are to be used in an Intermediate Steel Moment Frame system meet these requirements, two options are presented:

1. An already prequalified moment connection can be used in accordance with AISC 358-16. These connection types will be discussed later.
2. A moment connection can be prequalified following the requirements of Sections K1 and K2 of AISC 341-16. These sections will also be discussed later.

In addition to these specific requirements which relate to the moment connections' performance, there are several other requirements prescribed in AISC 341-16. The first set of requirements concerns stability bracing of the beams in the moment frame. These beams shall be braced as follows:

1. Either both flanges of the beam(s) shall be laterally braced, or the beam cross section shall be torsionally braced.
2. The beam bracing shall meet the requirements of Appendix 6 of the AISC's <u>Specification for Structural Steel Buildings</u> (American Institute of Steel Construction, 2016c) (AISC 360-16). The required flexural strength used for these requirements shall be per AISC 341-16 Equation D1-1.

$$M_r = (R_y)(F_y)(Z)\ for\ LRFD$$

$$M_r = \frac{(R_y)(F_y)(Z)}{1.5}\ for\ ASD$$

3. The maximum spacing between beam bracing, L_b, shall be per AISC 341-16 Equation D1-2.

$$L_b = \frac{0.19(r_y)(E)}{R_y F_y}$$

4. Beam bracing shall also be placed near concentrated forces, changes in cross section, and at other locations where analysis indicates that a plastic hinge will form during inelastic deformations of the Intermediate Steel Moment Frame. The placement of this bracing shall also be consistent with what is prescribed by the prequalified connection used per AISC 358-16.
5. At plastic hinges, the required strength of this stability bracing shall be:
    a. Per AISC 341-16 Equation D1-4 when lateral bracing is used.

    $$P_u = \frac{0.06(R_y)(F_y)(Z)}{h_o} \; for\ LRFD$$

    $$P_a = \frac{(0.06)(R_y)(F_y)(Z)}{1.5h_o} \; for\ ASD$$

    b. Per AISC 341-16 Equation D1-5 when torsional bracing is used.

    $$M_u = 0.06(R_y)(F_y)(Z)\ for\ LRFD$$

    $$M_a = \left(\frac{0.06}{1.5}\right)(R_y)(F_y)(Z)\ for\ ASD$$

The second set of requirements concerns the members used in the moment frame. The beams and columns used in the moment frame must have width-to-thickness ratios which classify the section as moderately ductile. For wide-flange sections, these ratios are presented in AISC 341-16 Table D1.1 as summarized below.

$$b/t_f \leq 0.40\sqrt{\frac{E}{R_y F_y}}\ for\ flanges$$

$$h/t_w \leq 3.96\sqrt{\frac{E}{R_y F_y}}(1 - 3.04C_a)\ for\ webs\ when\ C_a \leq 0.114$$

$$h/t_w \leq 1.29\sqrt{\frac{E}{R_y F_y}}(2.12 - C_a) \geq 1.57\sqrt{\frac{E}{R_y F_y}}\ for\ webs\ when\ C_a > 0.114$$

where

$$C_a = \frac{P_u}{\phi_c P_y}\ for\ LRFD$$

$$C_a = \frac{\Omega_c P_a}{P_y}\ for\ ASD$$

where

$$P_y = R_y F_y A_g$$

Also, abrupt changes in the beam flange area are not allowed in the plastic hinge area. This includes drilling of holes or trimming of the beam flange width unless testing or prequalification indicates that these are acceptable. Finally, the locations at each end of the beam that experience inelastic straining shall be considered a protected zone. A protected zone is an area in which the following requirements must be met:

1. Holes, tack welds, erection aids, air-arc gouging, and unspecified thermal cutting from fabrication or erection operations shall be repaired.
2. Steel headed stud anchors and decking attachments shall not be placed on beam flanges.

3. Welded, bolted, screwed, or shot-in attachments for perimeter edge angles, exterior facades, partitions, duct work, piping, or other construction are not allowed.

The third and final set of requirements concern the connections used in the moment frame. First, demand critical welds shall be used at groove welds at column splices, welds at column to base plate connections, and complete joint penetration groove welds at beam flanges and webs to columns unless designated by the prequalified connection utilized from AISC 358-16. Also, demand critical welds are not required at the column to base plate connections if column hinging is not present at or near the base and if there is no net tension under the load combinations including the overstrength seismic load. In addition, the required shear strength of the beam-to-column connection shall be based on the capacity-limited seismic load effect. The capacity-limited horizontal seismic load effect, E_{cl}, can be found per AISC 341-16 Equation E2-1.

$$E_{cl} = \frac{2(1.1)(R_y)(M_p)}{L_h}$$

This is the same requirement as for ordinary moment frames except that instead of the clear distance of the beam used previously, L_h is the distance between the plastic hinge locations as defined within AISC 358-16.

Similar to the requirements for an OMF moment connection, continuity plate (where required) thicknesses shall be at least one-half of the beam flange thickness when utilized in a one-sided connection; when utilized in a two-sided connection, the continuity plate thickness shall be at least three quarters of the thicker of the two beam flanges connecting to the

column. However, the minimum continuity plate thickness shall be equal to its width divided by 16. The width of the continuity plate shall extend to the width of the wider beam as a minimum. Also, the plates shall be welded to the column flanges to develop the available strength of the contact area of the plates with the column flange. The weld of the plates to the column web shall be designed for the smallest of the following:

1. The sum of the design strengths, in tension, of the contact areas of the plates to the column flanges that are opposed by beam flanges.
2. The design strength in shear of the contact area of the plates with the column web.
3. The available shear strength of the column web.

Requirements for the column splices are also presented. First, per AISC 341-16 Section D.5b(1), the required strength of the column splices that are part of the Seismic Force-Resisting System shall be determined using the overstrength seismic load. Second, per Section D.5b(2), if any portion of a column is subjected to net tension from the overstrength seismic load, and utilizes a welded column splice, the column splice shall meet the following requirements:

1. Where partial-joint-penetration (PJP) welds are used, the weld strength shall be at least equal to 200% of the required strength.
2. The strength of each flange splice shall be equal to:

$$0.5R_yF_yb_ft_f \ for\ LRFD$$

$$0.5R_yF_yb_ft_f/1.5 \ for\ ASD$$

3. Where complete-joint-penetration (CJP) welds are used and when the tension stress in the smaller flange exceeds $0.30F_y$ for LRFD or $0.3F_y/1.5$ for ASD, tapered transitions are required between the two column flange widths and/or thicknesses. These transitions shall be in accordance with AWS D1.8/D1.8M clause 4.2.

In addition to the above requirements, AISC 341-16 Section D.5c stipulates a minimum shear strength requirement for all building columns, not just those that are part of the Seismic Force-Resisting System. The required shear strength, for both axes of the column, is:

$$M_{pc}/H \;\; for\ LRFD$$

$$Mpc/1.5H \;\; for\ ASD$$

Where M_{pc} is the plastic flexural strength of the smaller column for the direction in question and H is the story height. In this case, H can be taken as the distance between centerline of the floor framing or between top of the floor slabs.

AISC 341-16 Section E3.6g also has column splice requirements in addition to those outlined above which are specific to column splices in moment frames. When welded, the column flanges shall either utilize CJP or PJP welds. However, PJP welds are only allowed to be used if the columns do not have a specified yield stress greater than 60 ksi and the thicker flange is at least 5% thicker than the thinner flange. If PJP welds are used, they must meet the following requirements:

1. The PJP weld must provide a minimum total effective throat equal to at least 85% of the thinner flange.

2. A smooth transition shall be made in the weld from the outside of the thinner flange to the outside of the thicker flange.
3. If a double-bevel weld is provided:
    a. The root face shall be centered within the middle half of the thinner flange, and
    b. Weld access holes shall satisfy the requirements of the AISC *Specification*.
4. If the thinner flange is not greater than 2 ½" and the weld is a single-bevel weld, weld access holes shall not be required.

When welded, the web splice may be either CJP or PJP welds. However, in order for PJP welds to be used, the thicker web must be at least 5% thicker than the thinner web. If a PJP weld is used, it must meet the following requirements:

1. The PJP weld must provide a minimum total effective throat equal to at least 85% of the thickness of the thinner web.
2. A smooth transition shall be made in the weld from the outside of the thinner web to the outside of the thicker web.
3. If the thinner web has a thickness greater than 2 ½", a double-sided weld shall be provided.

A bolted column splice is also allowed per AISC 341-16 per Section E3.6g.5. Per this section, the required flexural strength of the splice shall be at least equal to:

$$R_y F_y Z_x \ for\ LRFD$$

$$R_y F_y Z_x / 1.5 \ \ for\ ASD$$

where Z_x is the plastic section modulus of the smaller column section.

Also for a bolted column splice, the required shear strength of the splice shall be at least equal to:

$$\sum M_{pc}/H_c \;\; for\ LRFD$$

$$\sum M_{pc}/1.5H_c \;\; for\ ASD$$

where ΣM_{pc} is the sum of the plastic flexural strengths at the top and bottom ends of the column.

2.1.4.3 Special Steel Moment Frame

The third and final type of steel moment-framed building is the Special Steel Moment Frame (SMF). Per ASCE 7-16, this type of moment frame system has R = 8, C_d = 5 1/2 , and Ω_o = 3. It should be noted that, unlike Ordinary and Intermediate Steel Moment Frames, Special Steel Moment Frames do not have any height restrictions and can be used in any seismic design category.

The requirements in ASCE 7-16 for Special Steel Moment Frames are not limiting because the requirements in AISC 341-16 are the most severe out of all the moment frame types. These requirements are intended to provide significant inelastic deformation capacity and are outlined in Section E3 of AISC 341-16. In order to provide this deformation capacity, the beam-to-column moment connections are required to be capable of accommodating a story drift angle of at least 0.04 radians. Similar to the Intermediate Steel Moment Frame, the moment connection itself should also be capable of developing 0.80M_p of the beam at this

story drift angle. Connection conformance can be demonstrated in an identical manner to an Intermediate Steel Moment Frame; either:

1. A previously qualified moment connection can be used in accordance with AISC 358-16. These connection types will be discussed later.
2. A moment connection can be prequalified following the requirements of Sections K1 and K2. These sections will also be discussed later.

As discussed for the IMF and SMF systems, AISC 341-16 states that a moment strength equivalent to $0.80M_p$ of the beam be developed at the specified drift. However, the commentary to AISC 341-16 clarifies this requirement further. The commentary to AISC 341-16 Section E3 indicates that degradation of the connection is the main concern, and the 80% limit is based on judgement to account for this concern. Specifically, "the 80% limitation was implemented to provide some assurance that structures would not be pushed "too far" into the strength degrading range, though the definition of "too far" was not quantified." The commentary goes on to describe how the Simpson Strong Tie connection (a proprietary product) only developed roughly 50% of the beam's plastic moment. However, since the connection did not appear to be near the strength-degrading portion of the connection response, the connection was considered acceptable. Therefore, if it can be shown that a connection will not experience degradation at the specified drift limits, the 80% limit need not be met.

In addition to these specific requirements which relate to the moment connections' performance, there are several other requirements prescribed in AISC 341-16. The first set of

requirements concerns the moment ratio between the column and beam(s) connected to it. This requirement is per AISC 341-16 Equation E3-1.

$$\frac{\sum M_{pc}^{*}}{\sum M_{pb}^{*}} > 1.0$$

where $\sum M_{pc}^{*}$ and $\sum M_{pb}^{*}$ are defined by AISC 341-16 Equations E3-2 and E3-3.

$$\sum M_{pc}^{*} = \sum Z_c \left(F_{yc} - P_{uc}/A_g\right) for\ LRFD$$

$$\sum M_{pc}^{*} = \sum Z_c \left(F_{yc} - 1.5\, P_{ac}/A_g\right) for\ ASD$$

$$\sum M_{pb}^{*} = \sum\left(M_{pr} + M_{uv}\right) for\ LRFD$$

$$\sum M_{pb}^{*} = \sum\left(M_{pr} + 1.5 M_{av}\right) for\ ASD$$

In these equations:

A_g = gross area of column

F_{yb} = specified minimum yield stress of the beam (ksi)

F_{yc} = specified minimum yield stress of the column (ksi)

M_{pr} = maximum probable moment at the location of the plastic hinge as found in AISC 358-16

M_{av} or M_{uv} = additional moment due to the shear amplification from the location of the plastic hinge to the column centerline based on ASD or LRFD load combinations respectively (k-in.)

P_{ac} or P_{uc} = required compressive strength using ASD or LRFD load combination respectively (kips)

Z_c = plastic section modulus of the column (in.^{3})

As is typical for these requirements, exceptions are presented for the above requirements. The above requirements need not apply if either of the following conditions are met.

1. Columns with $P_{rc} < 0.3\ P_c$ as determined for all applicable load combinations other than those determined using the overstrength seismic load and which satisfy either of the following.
    a. Columns used in a one-story building or the top story of a multistory building.
    b. Columns where:
        i. The sum of the available shear strengths of all exempted columns in the story is less than 20% of the sum of the available shear strengths of all moment frame columns in the story acting in the same direction, and
        ii. The sum of the available shear strengths of all exempted columns on each moment frame column line within that story is less than 33% of the available shear strength of all moment frame columns on that column line. A column line is a single line of columns or parallel lines of columns located within 10% of the plan dimension perpendicular to the line of columns.

where:

$$P_c = F_{yc}A_g \; for \; LRFD$$

$$P_c = F_{yc}A_g/1.5 \; for \; ASD$$

$$P_{rc} = P_{uc} \; for \; LRFD$$

$$P_{rc} = P_{ac} \; for \; ASD$$

2. Columns in any story that have a ratio of available shear strength to required shear strength that is 50% greater than the story above.

The second set of requirements concerns stability bracing of the beams in the moment frame. These requirements are the same as for Intermediate Moment Frames except that the maximum spacing between bracing shall be per AISC 341-16 Equation D1-3.

$$L_b = \frac{0.19 r_y E}{R_y F_y}$$

Additionally, stability bracing requirements are presented for the beam-to-column connections themselves. In braced connections, where the webs of the beam(s) and column are co-planar, and the column is shown to remain elastic outside of the panel-zone, the column flanges at the beam-to-column connections shall have stability bracing provided at the top flanges of the beam(s). A column is assumed to remain elastic when AISC 341-16 Equation 3-1 (discussed above) is found to be greater than 2.0. If the column is not found to remain elastic, the following requirements shall apply.

1. The column flanges shall be laterally braced at both the top and bottom flanges of the beam(s).
2. Each column-flange member brace shall be designed for a required strength equal to 2% of the available beam flange strength ($F_y b_f t_{bf}$ for LRFD or $F_y b_f t_{bf}/1.5$ for ASD).

For unbraced connections, the column shall be designed using the distance between adjacent member braces as the column height except that:

1. The required column strength shall be determined using the load combinations in the applicable building code including the overstrength seismic load. When determining the overstrength seismic load, the effect of horizontal forces including overstrength, E_{mh} as defined above for Intermediate Moment Frames, need not exceed 125% of the frame's available strength based upon either the beam's available flexural strength or the column's available panel zone shear strength.
2. The slenderness (L/r) for the column shall not exceed 60.
3. The column's required flexural strength transverse to the seismic frame shall include the moment caused by the application of the force specified in item 2 above for braced connections in addition to the second-order moment due to this applied force.

The third set of requirements concerns the members used in the moment frame. The beams and columns used in the moment frame must have width-to-thickness ratios which classify the section as highly ductile. For wide-flange sections, these ratios are presented in AISC 341-16 Table D1.1 as summarized below.

$$b/t_f \leq 0.32\sqrt{E/R_yF_y} \; for\ flanges$$

$$h/t_w \leq 2.57\sqrt{E/R_yF_y}\,(1 - 1.04C_a) \; for\ webs\ when\ C_a \leq 0.114$$

$$h/t_w \leq 0.88\sqrt{E/R_yF_y}\,(2.68 - C_a) \geq 1.57\sqrt{E/R_yF_y} \; for\ webs\ when\ C_a > 0.114$$

where C_a is the same as defined above for Moderately Ductile Members required in Intermediate Moment Frames.

Similar to Intermediate Moment Frames, abrupt changes in the beam flange area are not allowed in the plastic hinge area (including drilling and trimming of beam flanges) unless shown as acceptable through testing or qualification. Also, the locations at each end of the beam that experience inelastic straining shall be considered a protected zone as defined above.

The fourth and final set of requirements concern the connections used in the moment frame. For Special Moment Frames, all of the requirements from Intermediate Moment Frames apply with the following alterations and additions.

1. The required shear strength of the connection shall be determined using the capacity-limited seismic load effect; this load effect, E_{cl}, shall be determined per AISC 341-16 Equation E3-6.

$$E_{cl} = 2M_{pr}/L_h$$

where:

M_{pr} = Maximum probable moment at the plastic hinge location

L_h = Distance between plastic hinge locations

2. The required shear strength of the column's panel zone shall be determined from the summation of the moments at the column faces as determined by projecting the expected moments at the plastic hinge points to the column faces. The design shear strength, ϕR_n (LRFD) or R_n/Ω (ASD), shall be as determined per AISC 360-16 Section J10.6 with ϕ = 1.0 and Ω = 1.5.
3. The individual thicknesses, t, of the column web thickness and doubler plate(s), if used, shall satisfy the requirement of AISC 341-16 Equation E3-7.

   $$t \geq (d_z + w_z)/90$$

   where:

   $d_z = d - 2t_f$ of the deeper beam at the connection

   w_z = width of the panel zone between column flanges

   As an alternate, if plug welds are used to prevent local buckling of the column web and doubler plate(s), this equation can be used to determine the total thickness of the column web plus doubler plate(s). When plug welds are used, a minimum of four shall be provided between the column web and doubler plate. Also, when plug welds are used, this equation shall still be used to verify the individual thicknesses of the column web and web doubler; however, d_z and w_z shall be modified to be the distance between the plug welds.
4. If doubler plates are used, they shall not be less than ¼" thick. The doubler plate(s) may be placed in contact with the web or spaced away from the web. If the doubler plates are spaced away from the web, they shall be provided in pairs on opposite sides of the

web and symmetrically placed. When placed in contact with the web, the doubler plates shall be welded to the column flange utilizing a PJP weld per AWS D1.8/D1.8M clause 4.3 or with fillet welds. When spaced away from the column web, the doubler plates may be welded with CJP, PJP, or fillet welds. PJP and fillet welds shall be sized to develop the shear yield strength of the doubler plate. Doubler plate shall also satisfy the following requirements depending on if continuity plates are used or not.

a. When continuity plates are not present, the doubler plates and their associated welds shall extend at least 6” above and below the deeper moment-connected beam. If both the column web and doubler plate alone satisfy the thickness requirement of AISC 341-16 Equation E3-7 from above, no weld is required along the top and bottom edges of the doubler plates. If not, a minimum size fillet weld, as noted in AISC *Specification* Table J2.4, shall be used at both the top and bottom edges of the doubler plate. These welds shall be terminated 1 ½” from the toe of the column fillet.

b. When continuity plates are present, the doubler plates may either extend above and below the continuity plates or be placed between the continuity plates. If the doubler plates extend above and below the continuity plates, they shall extend at least 6” above and below the deeper moment-connected beam. In this case, the top and bottom edge of the doubler plates are not required to be welded to the column web. If the doulber plates are placed between the continuity plates, the welds between the doubler plates and the column flanges shall stop no more than 1” from the continuity plate. The top and bottom edge

of the doubler plates shall be welded to the continuity plates over the full length of the continuity plates where in contact with the web. This weld, between the doubler plates and continuity plates, shall be sized to develop 75% of the shear yield strength of the doubler plate.

2.1.5. Prequalification and Cyclic Qualification Testing Provisions

Chapter K of AISC 341-16 addresses the requirements used to qualify a connection (or connection type) to be used in a seismic resisting system. This chapter provides the loading sequence which is to be used when testing a new connection type in Section K2.4b. For beam-to-column moment connections, this loading sequence can be seen in Figure 2.2 and is also presented in tabular form in Table 2.1. It should be noted that the test may continue beyond what is shown in the figure and table at interstory drift increments of θ = 0.01 radians with two loading cycles. According to the commentary for Chapter K of AISC 341-16, this loading sequence is not intended to represent any particular ground motion, but rather was based on a series of nonlinear time history analyses.

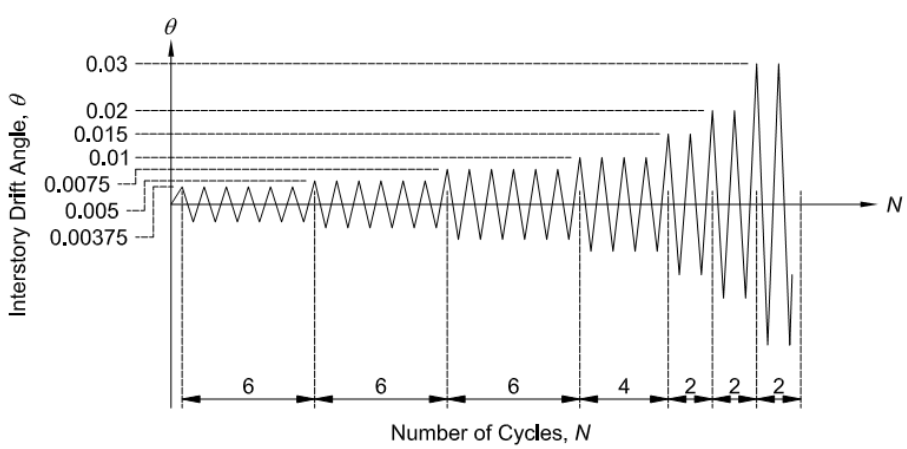

Figure 2.2 – Loading Protocol for Cyclic Tests

Interstory Drift Angle, θ (radians)	Number of Cycles
0.00375	6
0.005	6
0.0075	6
0.01	4
0.015	2
0.02	2
0.03	2

Table 2.1 – Loading Protocol for Cyclic Tests

Other requirements of this AISC chapter include submitting the connection details and testing procedure for review by a connection prequalification review panel approved by the authority having jurisdiction. Also, all variables associated with the connection shall be adequately represented during the testing phase. A design procedure must also be created which addresses all of the applicable limit states of the connection.

This AISC chapter also presents requirements for data that should be collected during testing of the connection. Sufficient data should be collected to provide the following:

1. A plot showing the applied load or displacement history.
2. A plot of the applied load versus the displacement.
3. A plot of beam moment versus story drift angle.

2.1.6. Quantification of Building Seismic Performance Factors: Component Equivalency Methodology (FEMA P-795)

The report Quantification of Building Seismic Performance Factors: Component Equivalency Methodology (FEMA P-795) (Applied Technology Council, 2011) was written as a follow up to the report Quantification of Building Seismic Performance Factors (FEMA P-695)

(Applied Technology Council, 2010). While the FEMA P-695 document presents a methodology for determining seismic performance factors (R, Ω_o, and C_d) for different seismic resisting systems, the FEMA P-795 document focuses on the components which are integral to these systems. The main purpose of the FEMA P-795 document is to provide an approach to show the equivalency of a new component as compared to an existing reference system and its associated components. This report contains eight steps which shall be followed to determine the equivalency of a new component. These steps are:

1. Component Testing Requirements
2. Applicability Criteria
3. Reference Component Test Data Requirements
4. Proposed Component Design Requirements
5. Proposed Component Test Data Requirements
6. Quality Rating Criteria
7. Component Equivalency Acceptance Criteria
8. Documentation and Peer Review Requirements

The component testing requirements contained within the report dictate that the specimen to be tested shall closely resemble the new component. This includes size, boundary conditions, and load application among other criteria. There is also general guidance on the cyclic-load testing procedures to be used during the specimen testing.

The applicability criteria portion of this report discusses several requirements that the component must meet in order to be considered an acceptable component. These include a

clear definition of the component and its boundaries. The structure surrounding the component must be, for the most part, unchanged from the reference system. Also, the new component must have a similar seismic as well as vertical load resistance and capacity.

The report also requires that test data must be collected on the reference component. This data can be compiled from existing sources or obtained from tests conducted specifically for the use in the equivalency evaluation. From this data, performance parameters should be established which can be compared with the parameters determined for the new component.

Next, the report discusses the proposed component design requirements. In this discussion, the report indicates that a method for predicting both the design strength and the design stiffness for the component should be developed. Specific detailing requirements for the component should also be developed in this step. Requirements should also be specified for how the component shall be attached to the surrounding structure, the limitations on the use of the component, the component construction, inspection, and maintenance requirements.

The report then addresses proposed component test data requirements. This step contains information pertaining to the physical testing of the new component. First, the range of configurations for the component should be defined. Then testing should be performed on the selected specimens. The data should be collected and interpreted. The data is then used to summarize the results.

The test data should then be given a quality rating. This quality rating is based on the completeness and robustness of the tests along with the confidence in the test results. This

quality rating is used in later steps to determine the acceptability of the equivalency of the new component.

The next step is to compare the summary statistics found for the new component to those for the reference component. The new component is considered to be equivalent when its summary of statistics complies with the acceptance criteria determined in this step.

The final step from the FEMA P-795 document is to document all of the results and have the results reviewed by a peer review panel. This documentation should include all of the requirements for the component and any limitations imposed on it. Also, all relevant test data should be presented and summarized in this step. This portion of the report also provides guidance as to the makeup of a peer review panel which shall review this information.

2.1.7. Existing Prequalified Connections for Use in Steel Intermediate and Special Moment Frames

Current prequalified connections for use in Steel Intermediate and Special Moment Frames are presented in AISC 358-16 as pointed out previously. The ten current prequalified moment connection types, in the order presented in AISC 358-16, are:

1. Reduced Beam Section (RBS) Moment Connection
2. Bolted Extended End-Plate (Unstiffened and Stiffened) Moment Connection
3. Bolted Flange Plate (BFP) Moment Connection
4. Welded Unreinforced Flange-Welded Web (WUF-W) Moment Connection
5. Kaiser Bolted Bracket (KBB) Moment Connection (proprietary)

6. ConXtech ConXL Moment Connection (proprietary)
7. Sideplate Moment Connection (proprietary)
8. Simpson Strong-Tie® Strong Frame® Moment Connection (proprietary)
9. Double-Tee Moment Connection
10. Slottedweb™ (SW) Moment Connection (proprietary)

A brief description of items 2, 3, 5, 6, 7, 9, and 10 is included below. As these moment connection types are quite different than the proposed connection, a brief description is deemed adequate. However, the WUF-W, RBS, and Simpson Strong-Tie® Strong Frame® moment connection types will be discussed in depth as these connections have features that are relevant to the proposed connection.

2.1.7.1. Bolted Extended End-Plate (Unstiffened and Stiffened) Moment Connection

This type of connection is made by welding the beam to an end plate. This end plate is then bolted to the column flange. There are currently three configurations of this connection type allowed in AISC 358-16. First, a 4-bolt unstiffened end plate; second, a 4-bolt stiffened end plate; and third, an 8-bolt stiffened end plate. These configurations are shown in Figure 2.3. The design of this connection type is outlined in AISC 358-16 and contains a thirteen-step process for the design of the end plates and bolts as well as a seven-step process for the column-side of the connection. This design process ensures that inelastic deformation of the connection is achieved by beam yielding. This is a ductile, and therefore desirable, limit state of the connection.

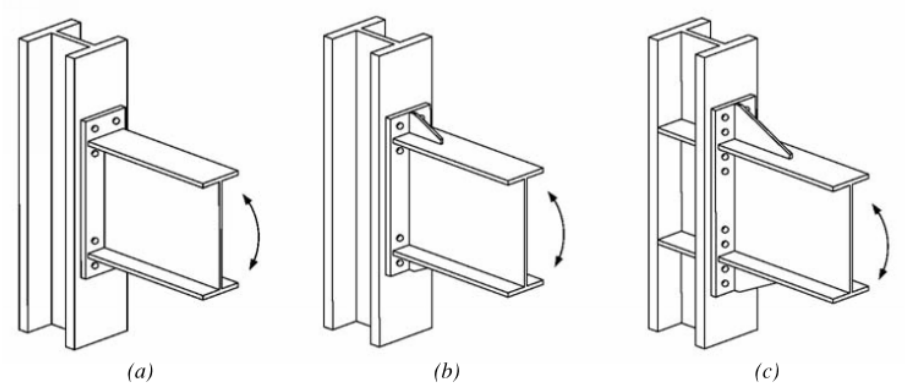

Figure 2.3 – Bolted Extended End-Plate (Unstiffened and Stiffened) Moment Connection

(Figure 6.1 of AISC 358-16)

2.1.7.2. Bolted Flange Plate Moment Connection

This type of connection is made by welding plates to the column flange above and below the beam. These plates are then bolted to the beam flanges. A shear tab connection is used to connect the web of the beam to resist the shear load. This connection type is shown in Figure 2.4. The design procedure for this connection type is a seventeen-step process as dictated in AISC 358-16. For this connection type, inelastic deformation is intended to occur through yielding of the beam near the end of the flange plates.

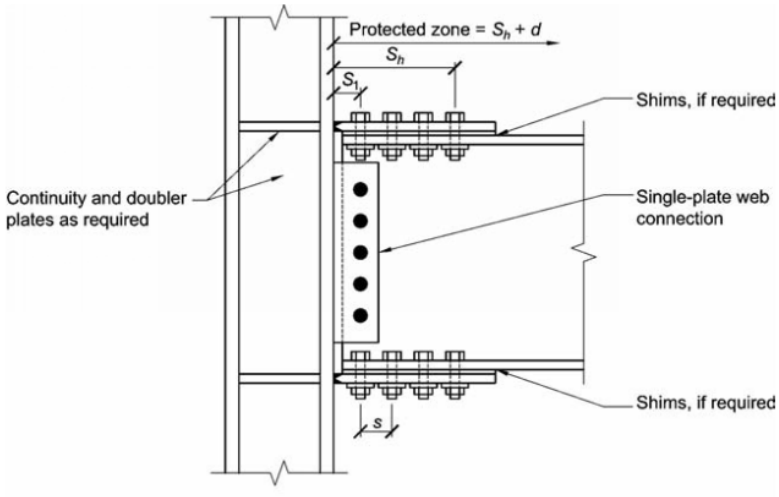

Figure 2.4 – Bolted Flange Plate Moment Connection

(Figure 7.1 of AISC 358-16)

2.1.7.3. Kaiser Bolted Bracket Moment Connection

This type of connection is similar to the bolted flange plate moment connection. However, instead of flange plates connecting the beam flange to column flange, a cast high-strength steel bracket is bolted to the column flange and either bolted or welded to the beam flange. This connection type is shown in Figure 2.5. It should be noted that this connection type is a proprietary system and, therefore, requires a licensing fee for the system to be used. In the Kaiser Bolted Bracket moment connection, inelastic deformation is intended to occur through yielding of the beam near the end of bracket.

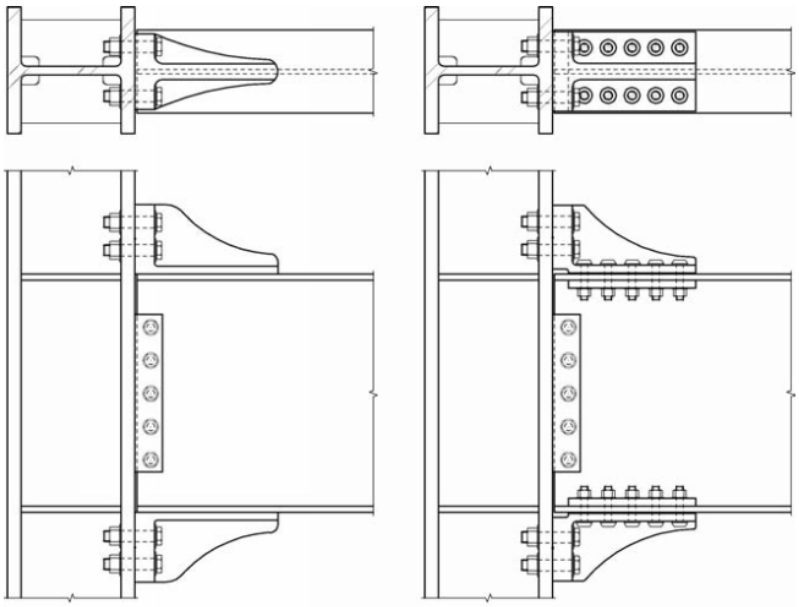

Figure 2.5 – Kaiser Bolted Bracket Moment Connection

(Figure 9.1 of AISC 358-16)

2.1.7.4. ConXtech® ConXL™ Moment Connection

This type of connection was specifically created to be used where wide flange beams are to be attached to HSS columns. In this connection type, the wide flange beams are shop welded to flange and web fittings. Fittings are also shop welded to the HSS column. These fittings are then bolted together in the field. This connection type is shown in Figure 2.6. Similar to the Kaiser Bolted Bracket moment connection, this connection type is a proprietary system and, therefore, requires a licensing fee for the system to be used. In this connection type, inelastic deformation is intended to occur through yielding of the beam adjacent to the beam flange fitting.

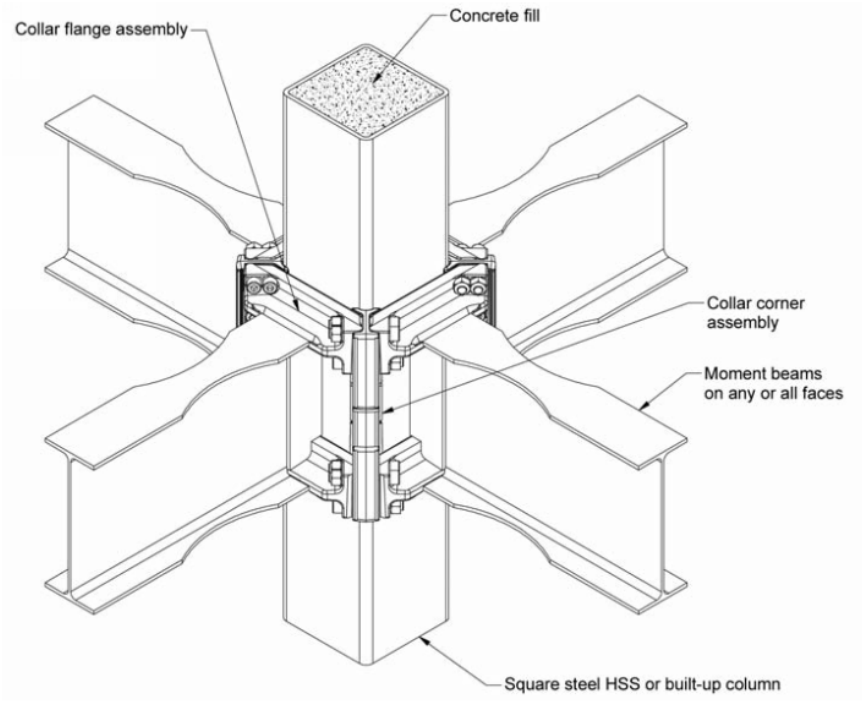

Figure 2.6 – ConXtech ConXL Moment Connection

(Figure 10.1 of AISC 358-16)

2.1.7.5. SidePlate® Moment Connection

In the SidePlate® moment connection, parallel plates are connected to both sides of the beam(s) and column as shown in Figure 2.7. Plates above and below the beam are also utilized as necessary to accommodate columns widths which are wider than the beam flanges. Forces are transferred from the beam to the side plates via welding. The forces are then transferred from the side plates to the column. Inelastic deformation is intended to occur in the beam beyond the end of the side plates (away from the column face). The SidePlate® moment connection is designed following an eight-step design procedure as outlined in Chapter 11 of

AISC 358-16. It should be noted that this system is a proprietary system, and therefore, requires a licensing fee to be used.

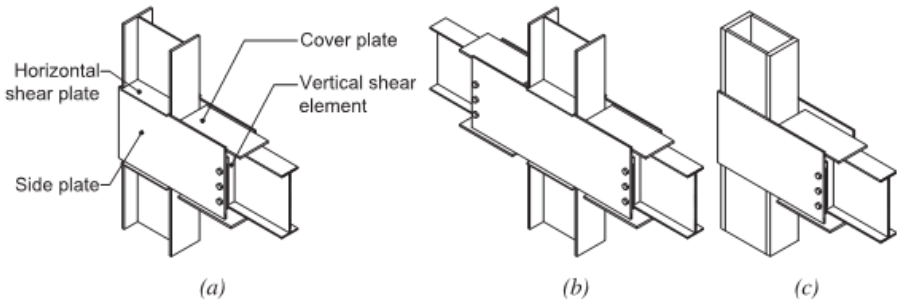

Figure 2.7 – SidePlate® Moment Connection

(Figure 11.1 of AISC 358-16)

2.1.7.6. Double-Tee Moment Connection

A double-tee moment connection consists of the beam flanges connected to WT sections that are then bolted to the column flange as shown in Figure 2.8. A bolted web plate connection is also utilized to resist the beam shear. For this type of moment connection, inelastic deformation is intended to occur in the beam near the ends of the stems of the bolted WT sections. The design procedure, per Chapter 13 of AISC 358-16, consists of 23 steps.

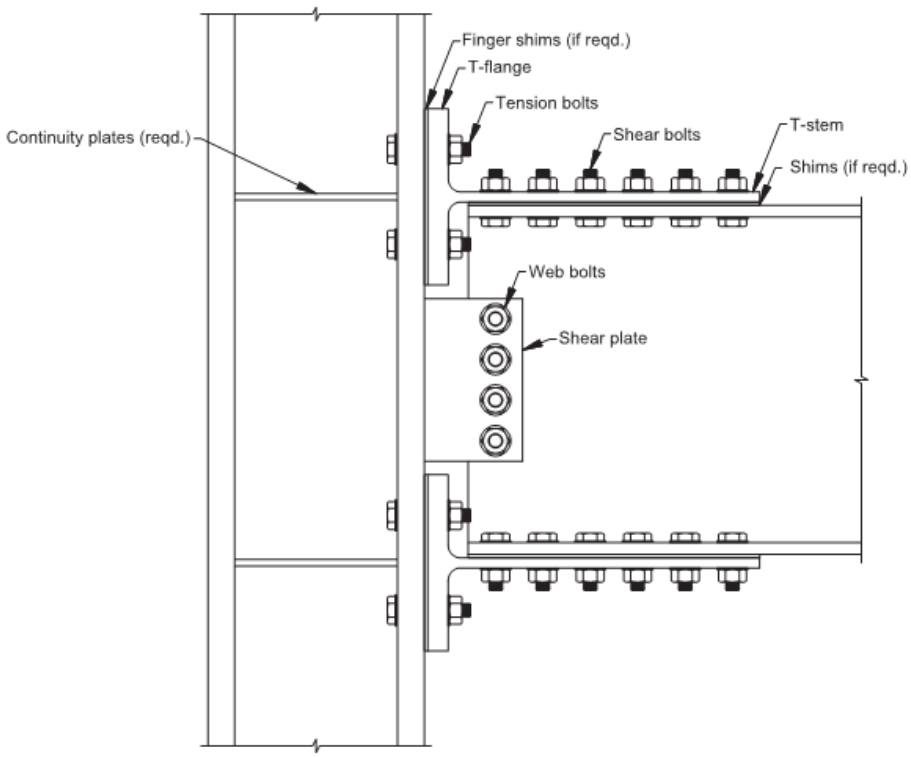

Figure 2.8 – Double-Tee Moment Connection

(Figure 13.1 of AISC 358-16)

2.1.7.7. SlottedwebTM Moment Connection

A SlottedwebTM moment connection consists of a beam to column connection where the flanges are welded via complete joint penetration welds to the column while the web is connected to the column via a welded shear plate. What makes the connection acceptable for use in a SMF system is the addition of a patented cut in the beam web. This cut allows yielding and buckling of the beam flange as well yielding of the web in the area near the end of the shear plate. This connection is shown in Figure 2.9. The design procedure, per Chapter 13 of

AISC 358-16, consists of 10 steps. As the cut is a patented item, this system is a proprietary system which requires a licensing fee to be used.

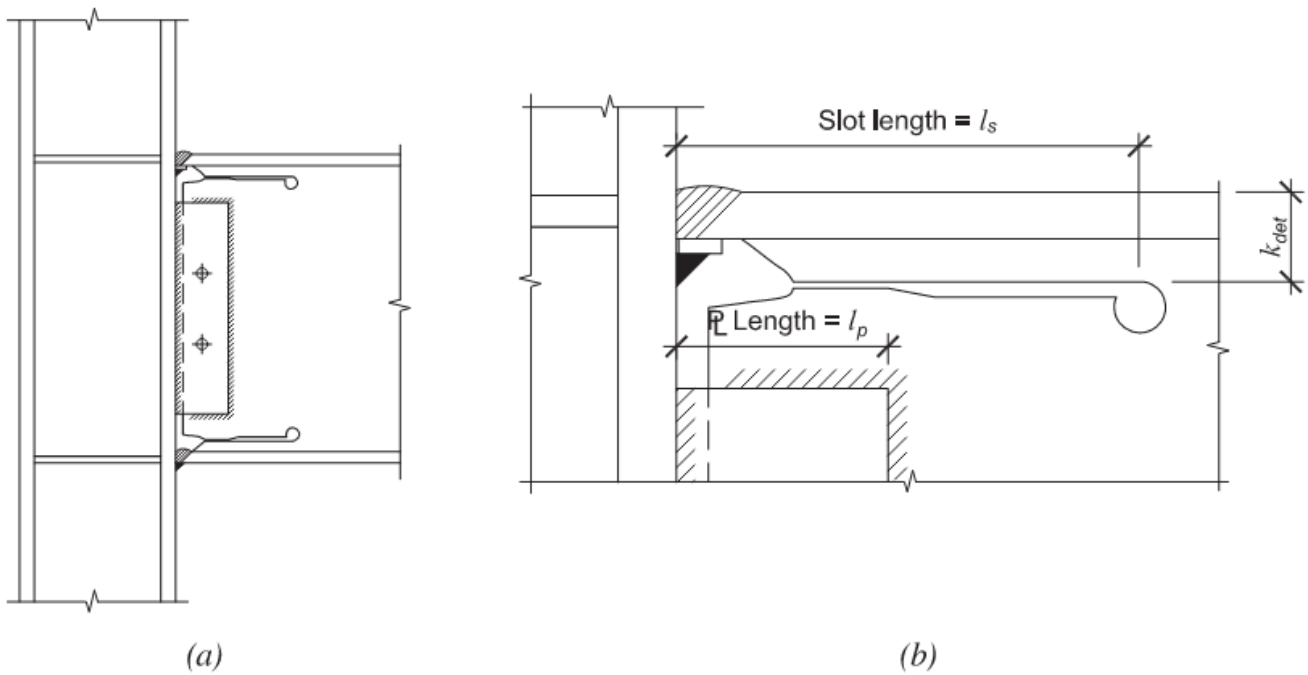

Figure 2.9 – Slottedweb™ Moment Connection

(Figure 14.1 of AISC 358-16)

2.1.7.8. Welded Unreinforced Flange-Welded Web (WUF-W) Moment Connection

In the Welded Unreinforced Flange-Welded Web (WUF-W) moment connection, both the beam flanges and web are field welded to the column with the web being connected to a shear plate off of the column flange. The WUF-W connection type is shown in Figure 2.10. In this connection, inelastic deformation occurs through yielding of the beam adjacent to the column flange. Special detailing requirements are needed to ensure that yielding occurs prior to rupture. There are also beam and column limitations associated with this detail.

The flanges in a WUF-W connection shall be connected to the column flange with CJP welds; the weld access holes for these welds shall conform to the requirements of AWS D1.8 Section 6.10.1.2. The geometric requirements for the web connection are shown in Figure 2.11. Also, when a WUF-W connection is used in a special moment frame, the column-beam moment ratio ($\sum M_{pc}^{*}/\sum M_{pb}^{*}$) must be greater than 1.0.

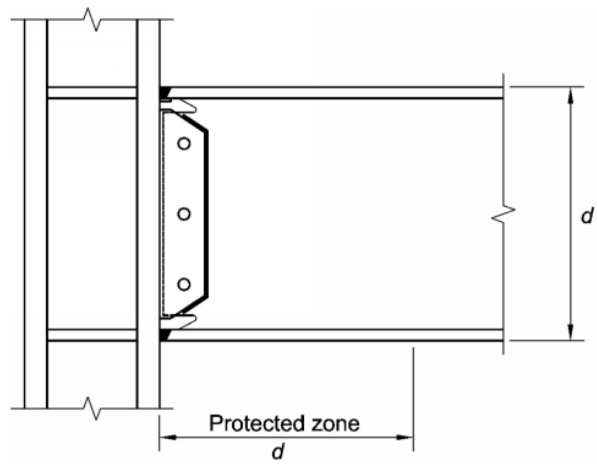

Figure 2.10 – Welded Unreinforced Flange-Welded Web Moment Connection

(Figure 8.1 of AISC 358-16)

A WUF-W connection shall be designed per the following six steps. Step 1; compute the probable maximum moment at the plastic hinge, M_{pr}, per AISC 358-16 Equation 2.4-1 and Section 8.7 as shown below.

$$M_{pr} = 1.4(R_y)(F_y)(Z_x)$$

Step 2; assume the plastic hinge is at the face of the column. Step 3; compute the shear force, V_h, at the plastic hinge location at each end of the beam. This shear shall be determined from a free body diagram of a portion of the beam between the plastic hinge locations. The free body

diagram shall include M_{pr} at each plastic hinge as well as the gravity load based on the load combination $1.2D + f_1L + 0.2S$. In this load combination, f_1 is a live load reduction factor. Step 4; verify the column-beam moment ratio mentioned above is satisfied as well as check the column web panel-zone requirements. Step 5; check the beam design shear strength versus V_h calculated in step 3. Step 6; check the column for stiffener plate requirements.

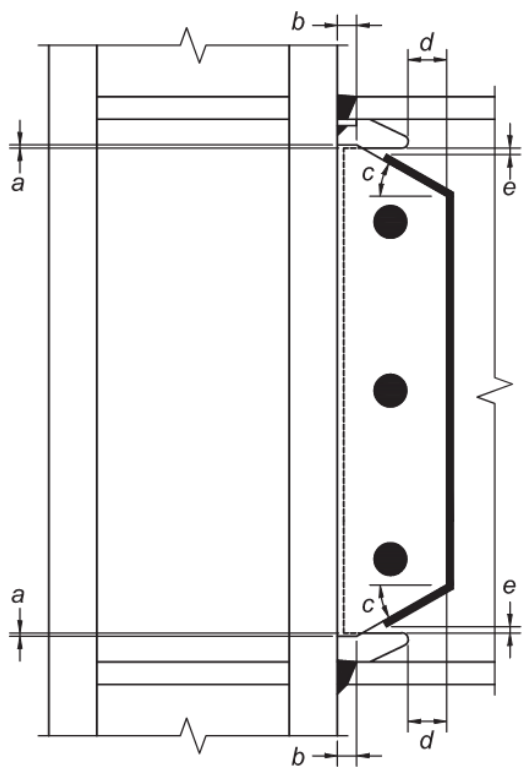

Notes

a = ¼ in. (6 mm) minimum, ½ in. (12 mm) maximum
b = 1 in. (25 mm) minimum
c = 30° (±10°)
d = 2 in. (50 mm) minimum
e = ½ in. (12 mm) minimum distance, 1 in. (25 mm) maximum distance from end of fillet weld to edge of access hole

Figure 2.11 – Welded Unreinforced Flange-Welded Web Connection Geometry

(Figure 8.3 of AISC 358-16)

2.1.7.9. Reduced Beam Section (RBS) Moment Connection

In the Reduced Beam Section (RBS) moment connection, the beam flanges are welded to the column flange. In SMF systems, the beam web is also welded to column flange, while in IMF systems the web is allowed to be bolted to the column if certain requirements (discussed later) are met. The beam flanges are then trimmed in a radial fashion adjacent to the column. This trimming of flange area is intended to force all inelastic deformation to occur through beam yielding at this location. The RBS moment connection is shown in Figure 2.12. There are also beam and column limitations associated with this detail.

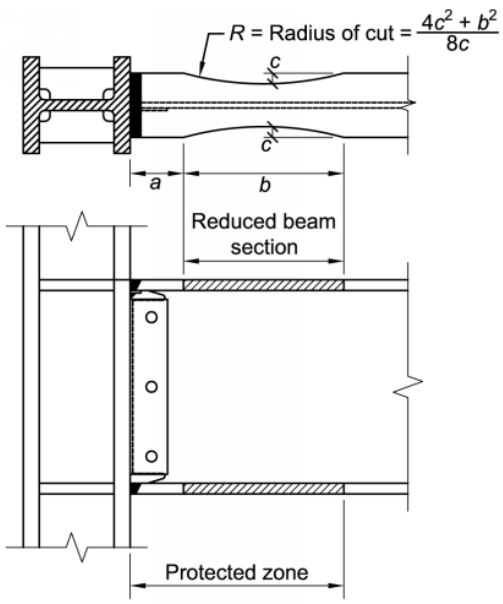

Figure 2.12 – Reduced Beam Section Moment Connection

(Figure 5.1 of AISC 358-16)

Similar to the WUF-W moment connection discussed above, the beam flanges in an RBS moment connection shall be connected to the column flange with CJP welds; the access holes

for these welds shall conform to the requirements of AWS D1.8 Section 6.10.1.2. Also, when a RBS moment connection is used in a Steel Special Moment Frame, the column-beam moment ratio ($\sum M_{pc}^{*}/\sum M_{pb}^{*}$) must be greater than 1.0.

As mentioned previously, the web to column connection requirements are dependent on if the connection is part of an IMF or SMF system. When used in a SMF system, a shear plate is added to aid in erection while also serving as a backer bar for the CJP weld which is required between the beam web and column flange. This shear plate shall be at least 3/8" thick. When used in an IMF system, the shear plate can be used as the final connection, without the addition of the CJP weld between the beam web and column flange. The bolts used in this connection must be designed and installed as slip-critical bolts.

There are also strict requirements to be followed for the fabrication of the flange cuts to be used in an RBS moment connection. First, the cutting process must be made using thermal cutting to produce a smooth curve. Second, all transitions between the reduced beam section and the full flange width shall be rounded to minimize notch effects due to an abrupt transition. Third, the tolerances associated with the thermal cutting process shall be $\pm$ 1/4" from the theoretical cut line. Also, the overall width at the reduced beam section shall have a tolerance of $\pm$ 3/8".

An RBS moment connection shall be designed with the following 11 steps. Step 1; choose trial values for the reduced beam section dimensions *a*, *b*, and *c* per AISC 358-16 Equations 5.8-1, 5.8-2, and 5.8-3 as follows.

$$0.5b_{bf} \leq a \leq 0.75b_{bf}$$

$$0.65d \leq b \leq 0.85d$$

$$0.1b_{bf} \leq c \leq 0.25b_{bf}$$

where b_{bf} is the beam flange width, a is the horizontal distance from the face of the column flange to the start of the RBS cut, b is the length of the RBS cut, c is the depth or the RBS cut at its narrowest point, and d is the depth of the beam. With these trial RBS cut dimensions, the adequacy of the beam and column should be confirmed for applicable building load combinations. This includes drift limits incorporating the effect of the RBS. Step 2; compute the plastic section modulus at the center of the RBS. Step 3; compute the probable maximum moment, M_{pr}, at the center of the RBS per AISC 358-16 Equation 5.8-5 as shown below.

$$M_{pr} = C_{pr}R_yF_yZ_{RBS}$$

where C_{pr} is determined per AISC 358-16 Equation 2.4-2 as follows.

$$C_{pr} = \frac{F_y+F_u}{2F_y} \leq 1.2$$

Step 4; compute the shear force at the center of the RBS. This shear shall be determined from a free body diagram of a portion of the beam between the centers of the reduced beam section at each end of the beam. The free body diagram shall include M_{pr} at each plastic hinge as well as the gravity load based on the load combination $1.2D + f_1L + 0.2S$. Step 5; compute the probable maximum moment at the face of the column per the free body diagram discussed above. This moment, M_f, is calculated per AISC 358-16 Equation 5.8-6 as shown below.

$$M_f = M_{pr} + V_{RBS}\left(a + \frac{b}{2}\right)$$

Step 6; compute the plastic moment of the beam based on the expected yield stress, M_{pe}, per AISC 358-16 Equation 5.8-7 as shown below.

$$M_{pe} = R_y F_y Z_x$$

Step 7; check the flexural strength of the beam at the face of the beam versus probable maximum moment at the face of the column as indicated per AISC 358-16 Equation 5.8-8 as follows.

$$M_f \leq \phi_d M_{pe}$$

If this equation is not satisfied, the RBS dimensions (*a*, *b*, and *c*) or beam section size must be adjusted. Steps 2 through 7 shall then be repeated to check the adequacy of the new dimensions and / or section. Step 8; compute the required shear strength, V_u, of the beam per AISC 358-16 Equation 5.8-9 as shown below.

$$V_u = \frac{2M_{pr}}{L_h} + V_{gravity}$$

Where $V_{gravity}$ is the beam shear force resulting from $1.2D + f_1L + 0.2S$ load combination. The required shear strength should then be checked against the beam shear capacity as calculated per Chapter G of AISC 360-16. Step 9; design the beam web to column connection as discussed above. Step 10; check the column stiffener requirements. Step 11; check the column-beam moment ratio as discussed previously.

2.1.7.10. Simpson Strong-Tie® Strong Frame® Moment Connection

In the Simpson Strong-Tie® Strong Frame® moment connection, both the beam web and flanges are bolted to the column as shown in Figure 2.13. As can be seen in the figure, the beam web is bolted to a shear plate that is then welded to the column flange. The center bolt is placed in a standard hole while the bolts above and below the center bolt are placed in horizontally slotted holes (standard holes in beam web and slotted holes in shear plate). Additional bolts in line with the center bolt can be added to resist axial load. These additional bolts are placed in vertically slotted holes. There are also special coping requirements for the beam web as specified in Figure 12.3(a) of AISC 358-16.

The flange is bolted to a modified "T-sub" or end-plate connection. This T-stub or end-plate is also bolted to the column flange. Similar to the RBS moment connection above, the T-stub or end-plate contains a reduced width to force inelastic behavior to occur within this reduced width. This T-stub or end-plate is therefore called the Yield-Link. Since the Yield-Link stem is not positively attached to the beam along the reduced section length, it is susceptible to buckling under cyclic loading. Therefore, a "buckling restraint plate" is added to the connection. As seen in Figure 2.13, this plate is bolted to the beam flange and clamps the reduced portion of the Yield-Link stem which eliminates buckling. Also similar to the RBS moment connection, there are specific requirements related to the fabrication of the Yield-Link stem. The cuts used to make the reduced section must be made by either laser, plasma, or water-jet methods. The roughness of this cut surface must be less than 250 μ-in. The radius at

the cut shall be ½”, and the tolerance of the reduced section in relation to the theoretical cut line is ± 1/16”.

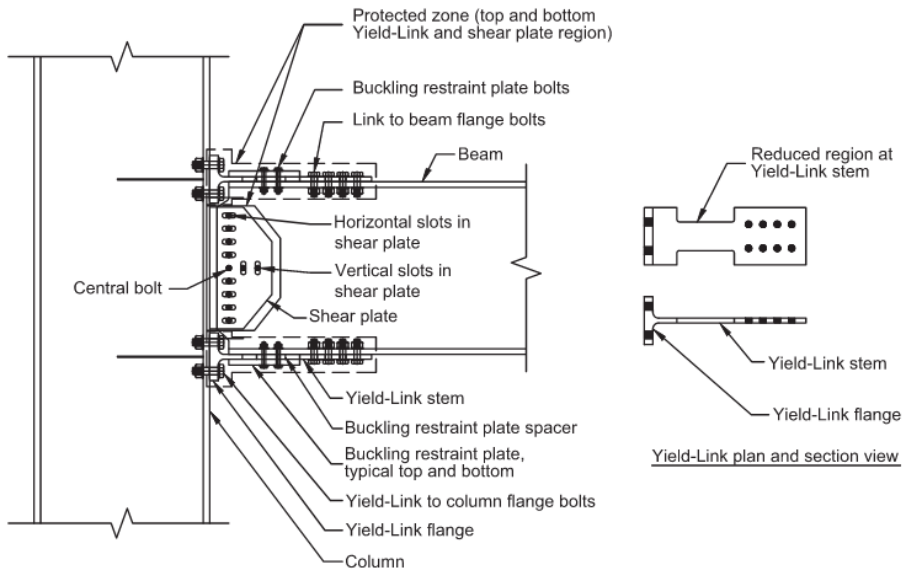

(a) T-stub Yield-Link

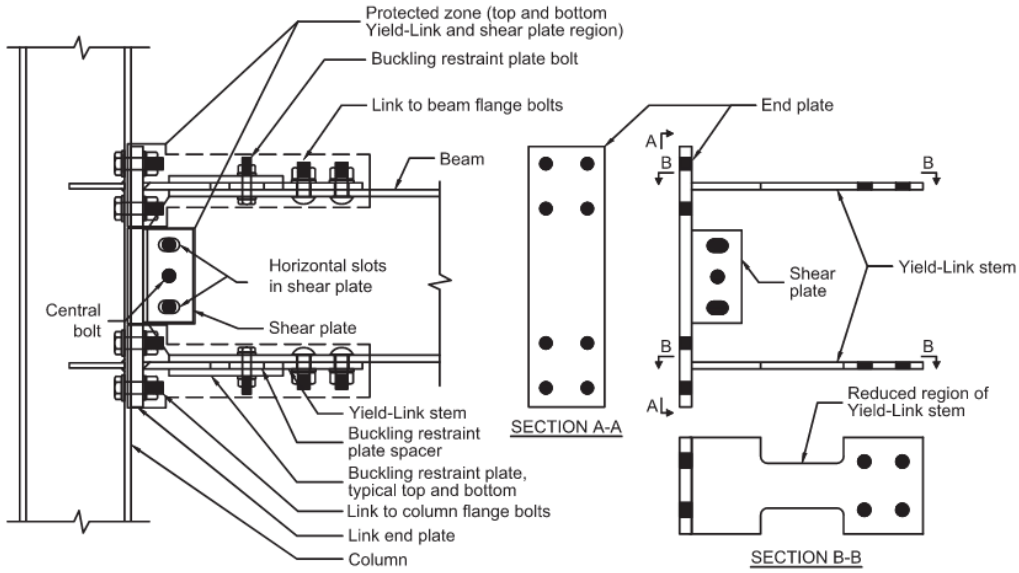

(b) End-plate Yield-Link

Figure 2.13 – Simpson Strong-Tie® Strong Frame® Moment Connection

(Figure 12.1 of AISC 358-16)

2.1.8. Durafuse Frames

The Durafuse moment connection is a new moment connection type that is under consideration to be included in the next cycle of AISC 358 for use in IMF and SMF systems. This connection uses a series of bolted and welded plates to attach the beam to the column as shown in Figure 2.14 from the DuraFuse website (DuraFuse Frames, n.d.). This connection is a proprietary system. This moment connection forces all of the inelastic behavior to occur in the bottom "fuse" plate. This is accomplished by sizing this plate and the holes in this plate (as seen in the figure) to yield prior to other elements. As such, this plate is theoretically the only element which would need to be replaced after a seismic event.

As the Durafuse moment connection is a proprietary element, and is not yet adaopted by AISC, a design procedure is not available to reference. Per Uniform Evaluation Service Report 164 (International Association of Plumbing and Mechanical Officials, 2017), once member sizes have been selected by the engineer of record, their structural analysis model shall be submitted to DuraFuse Frames, LLC. DuraFuse Frames then designs the moment connections and provides drawings and calculations back to the engineer of record for review.

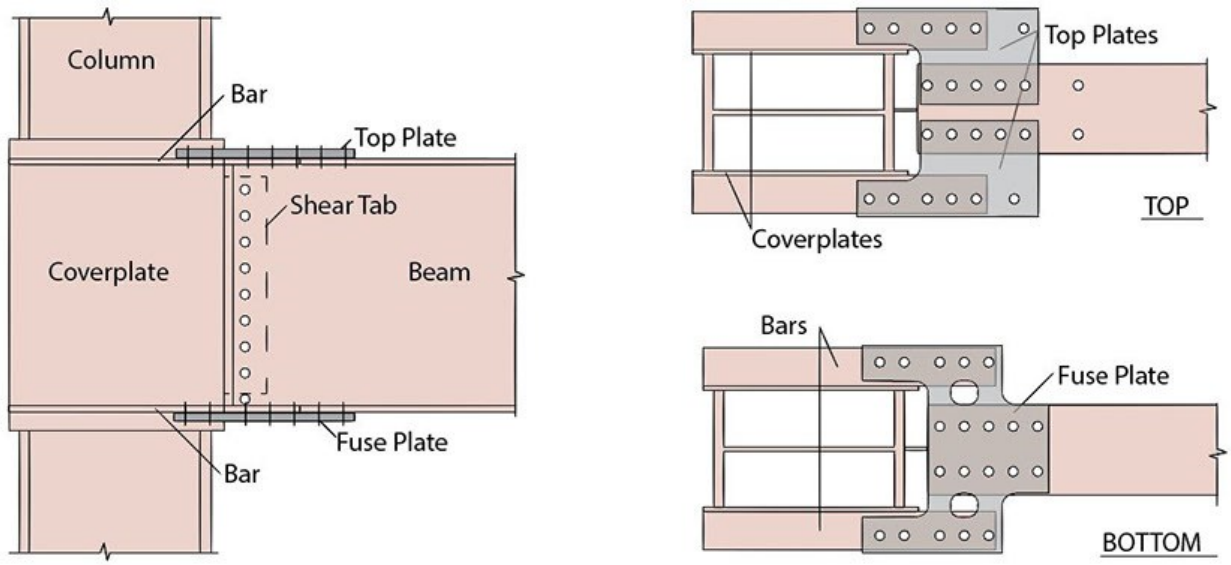

Figure 2.14 – Durafuse Moment Connection

(www.durafuseframes.com)

2.1.9. Performance-Based Seismic Design

Performance-based seismic design is a relatively new design concept being applied to the design of building structures. In this design concept, goals for the performance of the structure are given prior to design of the structure. These goals may be different for different intensities of seismic activity and can include such goals as collapse prevention, immediate occupancy, and life safety (among others). Per Next-Generation Performance-Based Seismic Guidelines (FEMA -445) (Applied Technology Council, 2006):

> The performance-based seismic design process explicitly evaluates how a building is likely to perform, given the potential hazard it is likely to experience, considering uncertainties inherent in the quantification of potential hazard and uncertainties in assessment of the actual building response. (p. 3)

The general design process for performance-based seismic design includes selecting the performance goals, developing a preliminary building design, assessing the performance of the preliminary building design, and finally verifying if the performance of the preliminary building design meets the stated performance goals. If it does, the design is satisfactory, and the design process is complete. If it does not, the preliminary building design must be revised, and its performance assessed again. One critical aspect of performance-based seismic design is an accurate understanding of the performance of the building structure and/or building components during a seismic event. Without this accurate understanding, the stated goals cannot be met with any degree of certainty.

2.1.10. Proposed Moment Connections

In addition to the prequalified, or soon to be prequalified, moment connections discussed in Sections 2.1.7 and 2.1.8, research has also been conducted on numerous different proposed moment connections. Many of these proposed connections contain nontraditional items which are intended to limit the damage sustained by the structure or provide self-centering capabilities to the connection. One such proposed connection is discussed in Damage Avoidance Design Steel Beam-Column Moment Connection Using High-Force-To-Volume Dissipators (Mander et al., 2009). In this paper, the use of high-force-to-volume energy dissipating devices attached to beams are investigated as a potential alternative to the energy dissipation accomplished through beam yielding in most currently prequalified moment connections.

Another proposed moment connection type is discussed in Posttensioned Seismic-Resistant Connections for Steel Frames (Ricles et al., 2001). In this proposed connection, posttensioned strands are added to the connection to provide self-centering capabilities to the moment connection while sacrificial steel angles are attached to the beam flanges to provide energy dissipation.

The use of shape memory alloys (SMA) has also been investigated for use in steel moment frame connections. One paper discussing this proposal is Design Motivation, Mechanical Modeling and Nonlinear Analysis of Composite PR Moment Frames with Smart SMA Connection Systems (Hu, 2013). In this proposal, SMA tension bars are run through the column and connected to the moment-connected beams on either side; these bars provide self-centering capabilities to the connection while the steel components provide energy dissipation similar to the proposed posttensioned connection discussed previously.

CHAPTER 3

DEVELOPMENT OF NEW MOMENT CONNECTION TYPE

3.1. Overview of New Moment Connection Type

The concept of the new moment connection type is based on the goals of providing a moment connection that 1) can be used in both Steel Intermediate and Special Moment Frame systems; 2) can be adjusted to closely match the required loading with minimal overstrength so as to not lead to an uneconomic surrounding structure; and 3) utilizes design features which allow the yielded elements to be easily replaced after a seismic event. To meet these three goals, the concept of the RBS moment connection was used as the basis for the new connection type. However, in lieu of trimming the flanges of the beam in the moment frame to control yielding in the flanges, it was decided that connection material would replicate the effect of having a narrower beam flange. In order to provide connection material that can be adjusted as well as replaceable, threaded rods were chosen as the yielding element. With the use of threaded rods as the yielding element in the connection, the proposed new moment connection type will be called a Yielding Threaded Rod (YTR) moment connection.

This project will utilize ASTM F1554 (ASTM International, 2021) threaded rods for the YTR moment connection. This type of threaded rod was chosen as they are prevalent throughout the construction industry as they are the main type used for anchor rods in column

base plate connections. They are also available in different strength grades which will provide an opportunity to mix strength and size to match the demand most closely.

As mentioned above, the concept of the YTR moment connection is to provide threaded rods as the yielding elements in the moment connection. For this to be achieved, a splice will be introduced into the beam adjacent to the column face. Lugs will then be attached to the beam flanges in which the threaded rods will pass through. The threaded rods will then have nuts installed on the outside of the lugs which will allow the threaded rods to be engaged in tension. The threaded rods will be allowed to yield in tension, but will not be restrained in compression; therefore, no additional steps will need to be taken to prevent buckling of the threaded rods. Instead, the compressive component of the force couple will be taken through bearing of the beam flanges on the opposite side of the beam from where the threaded rods are loaded in tension. This will dictate that the beam be fitted to bear at the splice. A web connection will also be provided to resist the shear force at the splice location. The layout for this concept is shown in Figure 3.1.

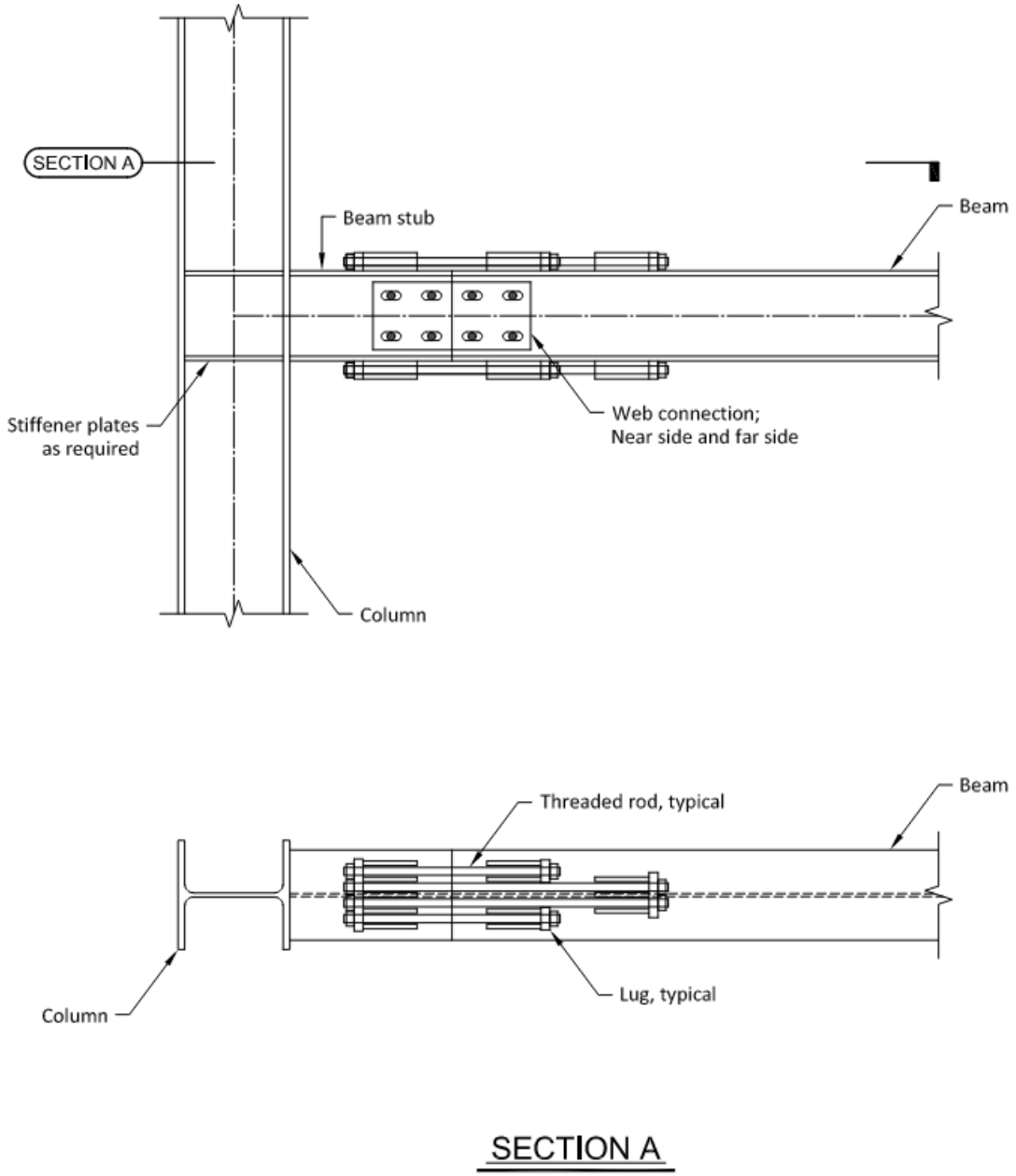

Figure 3.1 – Yielding Threaded Rod (YTR) Moment Connection

3.2. Design Procedure for the Yielding Threaded Rod Moment Connection

Similar to the other prequalified moment connection types discussed above, a design procedure must be developed for the YTR moment connection. This design procedure is described in the following 13 steps.

Step 1 – Determine force couple.

Based on preliminary design information (from appropriate load combinations, trial beam sizes, etc.), determine the force couple between the center of the beam flange and the approximate location of threaded rods adjacent to the opposite flange. With this information, the threaded rod number, size, and grade can be selected in Step 2.

Step 2 – Choose trial threaded rod number, size, and grade.

Based on the force determined in Step 1, select a trial number, size, and grade of the threaded rods. This combination of number, size, and grade must be able to resist the force determined in Step 1. There should be a minimum of two threaded rods at each flange while the maximum number of threaded rods at each flange will be limited by the width of the flange.

Step 3 – Determine the threaded rod lengths.

The specified drift must be accommodated by the connection. This drift is a combination of three aspects; 1) column rotation at the joint due to flexure, 2) beam rotation at the joint due to flexure, and 3) threaded rod elongation at the joint due to axial load in the threaded rods. The column and beam must accommodate the applied forces, including those resulting from a seismic event, without yielding. The threaded rods must accommodate the

axial load present in them resulting from the applied forces without rupture. Yielding in the threaded rods is intended to occur during a seismic event; however, the axial loads in the threaded rods from load combinations without earthquake loads must be resisted without yielding of the threaded rods. A method for determining the required length of the threaded rods will be presented in Chapter 4.

Step 4 – Compute the probable maximum moment, M_{pr}, at the splice location.

$$M_{pr} = N_{tr} C_{pr} R_y F_y A_{tr} l_e \qquad \text{(Eq. 3-1)}$$

In Equation 3-1, N_{tr} is the number of threaded rods, C_{pr} is a factor to account for peak connection strength (including strain hardening). C_{pr} will be determined during physical testing and will be discussed later. R_y the ratio of expected yield stress to specified minimum yield stress of the bars; again, this will be determined during physical testing and will be discussed later. A_{tr} is the cross-sectional area of a single threaded rod, and l_e is the moment arm between the threaded rods and center of the beam flange.

Step 5 – Compute the maximum shear force at the splice location, V_s.

Similar to the established prequalified moment connections discussed in Chapter 2, this should be determined from a free body diagram for the portion of the beam between the two splice locations. This free body diagram shall include M_{pr} and be based on the load combination $1.2D + f_1L + 0.2S$.

Step 6 – Design the bolted web splice to resist V_s.

The web splice shall be designed per AISC 360-16 Chapter J, Design of Connections. Applicable limit states include shear yielding of the splice plates, flexural yielding of the splice plates, interaction of shear and flexural yielding of the splice plates, shear rupture of the splice plates, flexural rupture of the splice plates, interaction shear and flexural rupture of the splice plates, block shear of the splice plates, buckling of the splice plates, bolt shear, bolt bearing on the splice plates, and bolt bearing on the beam web.

Step 7 – Compute the probable maximum moment, M_f, at the face of the column.

$$M_f = M_{pr} + V_s S_h \qquad \text{(Eq. 3-2)}$$

In Equation 3-2, S_h is the distance from the beam splice to the face of the column.

Step 8 – Check the flexural strength at the face of the column.

$$M_f \leq \phi R_y F_y Z_x \qquad \text{(Eq. 3-3)}$$

Step 9 – Check stiffening requirements at column.

This includes stiffeners and web-doubler plates and includes the limit states of flange bending, web local yielding, web local crippling, and web panel zone shear.

Step 10 – Compute the required shear strength at the face of the column.

$$V_u = \frac{2M_{pr}}{L_h} + V_{gravity} \qquad \text{(Eq. 3-4)}$$

Where L_h is equal to the distance between beam splices and $V_{gravity}$ is the beam shear force resulting from $1.2D + f_1L + 0.2S$ load combination.

Step 11 – Design the beam web to column flange weld.

Step 12 – Design threaded rod "lugs."

The lugs shall be designed per AISC 360-16 Chapter J, Design of Connections. Applicable limit states include shear and flexural yielding of the cross plates, bearing between the cross plates and finger plates, welding of the cross plates to finger plates, and welding of the finger plates to the beam flange.

Step 13 – Determine pretension for threaded rods.

Pretention in the threaded rods should be such that the pretension load is greater than or equal to the axial load in the threaded rods for load combinations which do not include seismic components.

CHAPTER 4

RESEARCH WORK PLAN

4.1. Research Work Plan Overview

The work portion of this research included four phases. The first phase included physical testing of a YTR moment connection specimen. The second phase included a finite element analysis model of the YTR moment connection. Phase three includes comparisons between data collected from the physical test specimen and that found from the finite element analysis model. The fourth phase demonstrates the application of the proposed YTR moment connection. These phases are discussed in greater depth within this chapter.

4.2. Physical Testing

The experimental work included two types of physical testing. First, several tension tests were performed on samples obtained from the threaded rods to be used in the connection. Second, one complete connection was tested. These tests will be discussed in depth below.

4.2.1. Threaded Rod Tension Tests

Six tension "dog-bone" specimens were performed prepared using material milled from the threaded rod materials to be used in the subsequent YTR moment connection test. These tests were performed to determine the actual material properties (E, F_y, and F_u) as opposed to

relying on the specified (nominal) material properties. These tension tests were performed using an Instron 3369 Dual Column Universal Testing System in the University of Wisconsin – Milwaukee structural engineering laboratory. An extensometer was used to measure the displacement in the middle region of the specimen in addition to the head movements reported by the test machine. As the specimen approached its yield strength, the extensometer was removed so as not to damage it. In the plastic range, the displacement data was recorded using the machine head movements. Although this data will not be as accurate as that recorded by the extensometer, it would provide sufficient accuracy in the plastic zone.

4.2.2. YTR Moment Connection Test

One test was performed on a complete connection based on the AISC connection test protocol described in Chapter 2. The test setup was comprised of a beam segment attached to a column segment. Per the literature review process (Plumier, 1997), it was found that one of the first RBS moment connection physical tests used a W10x49 beam to W12x79 column. Therefore, it was decided that these sizes would also be used for the physical testing of the YTR moment connection. The length of both the beam and column pieces were set at six feet to match the layout of the tie-down points in the strong floor of the laboratory. To size the connection material within the test specimen, the process described in section 3.2 is used as shown below. This test setup is discussed further in Section 4.2.2.1 and is shown in Figure 4.5.

Step 1 – Determine force couple.

As there are no load combinations to size the beam and determine the required moment in the test specimen, a moment of roughly (2/3)M_p at the face of the column will arbitrarily be used in the design. For a piece of A992 W10x49, this is:

$$(2/3)F_yZ = (2/3)(50ksi)(60.4in.^3) = 2{,}013k - in.$$

The beam splice will be located 1'-6" from the face of the column with the load applied 6'-0" from the centerline of the column segment. The splice location was chosen to allow room for the threaded rods to be connected to the beam flange while still being located relatively close to the column. As mentioned above, the six-foot dimension was chosen to correspond to the strong floor layout in the laboratory. Further clarification of these dimensions can be seen in Figure 4.5. As the test specimen is a cantilever, similar triangles can be used to determine the moment at the splice location. Therefore, the moment at the splice is equal to:

$$(2{,}013k - in.)[72" - (0.5)(12.4") - 18"]/[72" - (0.5)(12.4")] = 1{,}463k - in.$$

Assuming that the threaded rods are located 1" above and below the beam, the moment arm, l_e, is:

$$l_e = 10.0" + 1" - (0.5)(0.560") = 10.72"$$

Therefore, the force couple is:

$$1{,}463k - in./10.72" = 136.4kips$$

Step 2 – Choose trial threaded rod number, size, and grade.

Try (4) 7/8” Dia. F1554 Grade 55 threaded rods at each flange. The yield strength of the four rods is:

$$N_{tr}F_yA_{tr} = (4)(55ksi)(\pi)(0.875")^2/4 = 132.3kips$$

This is within roughly 3% of the target force; therefore, the noted threaded rod diameter and grade will be used for the test specimen.

Step 3 – Determine the threaded rod lengths.

As noted earlier, the rotation at the joint is a combination of column rotation, beam rotation, and threaded rod elongation (rotation at the splice). The target rotation of the joint per the AISC Seismic Provisions is 0.04 radians. As noted above, the minimum yield strength of the threaded rods is 132.3 kips. In combination with the moment arm of 10.72” noted above, the moment which should yield the threaded rods is:

$$(132.2kips)(10.72") = 1{,}417k - in.$$

As noted in the discussion above, the splice is 47.8” from the applied load. For a cantilever arrangement, this will result in an applied load of:

$$1{,}417k - in./47.8" = 29.6kips$$

With this applied load, the moment at the centerline of the column corresponding to the yield condition at the threaded rods is:

$$(29.6kips)(72") = 2{,}135k - in.$$

For a member (the column in the test specimen) which has pinned ends and an applied moment at its midspan (with l = length between pinned ends), the rotation at the location of the applied moment, θ_c, is equal to:

$$\theta_c = M[l^2 - 3(l/2)^2]/6EIl$$

For the W12x79 test specimen, this results in a column rotation of:

$$\theta_c = \frac{(2{,}135k-in.)\left[(72")^2-3(72"/2)^2\right]}{(6)(29{,}000ksi)(662in.^4)(72")} = 0.000334radians$$

Similarly, the rotation of the joint as a result of beam deflection, θ_b, due to this applied load is roughly equal to:

$$\theta_b = \tan^{-1}(Pl^2/3EI)$$

With the applied load of 29.6 kips, this angle is:

$$\theta_b = \tan^{-1}[(29.6kips)(72")^2/(3)(29{,}000ksi)(272in.^4)] = 0.0000901radians$$

Therefore, the amount of elongation that the threaded rods must experience during testing of the joint must accommodate a splice rotation of:

$$\theta_s = 0.04rad. - 0.000334rad. - 0.0000901rad. = 0.0396radians$$

This rotation can be resolved into elongation by assuming an isosceles triangle is formed between the beam flange and threaded rods as shown in Figure 4.1. With this assumption, the angle opposite the threaded rods must be equal to 0.0396 radians. Therefore, the elongation in the threaded rods must be:

$$\delta = (2)(10.72")(\tan 0.0396 radians/2) = 0.425 in.$$

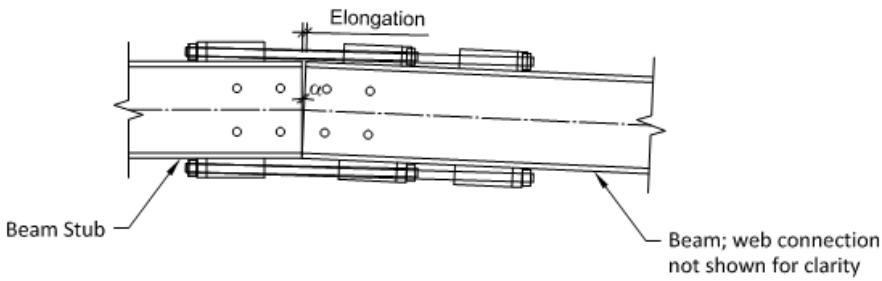

Figure 4.1 – Elongation of Threaded Rods Diagram Due to Splice Rotation

Prior to testing of the threaded rods, the ASTM specification for F1554 rods was used as a basis to determine if the threaded rods can accommodate this elongation without fracture. Per ASTM F1554 (ASTM International, 2021), grade 55 threaded rods are expected to experience a minimum of 18% elongation in 8 inches. This equates to 1.44 inches of elongation in an 8-inch-long threaded rod. This is substantially more than the 0.425 inches required during the test. It was decided to use threaded rods with a length of 24 inches. With bars of this length, accounting for the threading of the nuts on the threaded rod, an effective length of 21 ¾" can be assumed for the engaged length of the threaded rods as the yielding will occur between the nuts (where the full load is present). This effective length is based on the clear distance between the nuts on either end of the threaded rods.

Two of the threaded rods were longer than the length noted above. This is to verify the assumption that, with different lengths of rods, the longer rods would remain in the elastic zone longer than the shorter rods. The expectation, then, is that the threaded rods that remain elastic would be able to self-center the specimen after each cycle. Therefore, two of the threaded rods were 36" long rods; it should be noted that these threaded rods are not centered

on the splice. Similar to above, the engaged length of the threaded rods was less than the total length; in this case an engaged length of 33 ¾" was used.

Step 4 – Compute the probable maximum moment, M_{pr}, at the splice location as shown below.

$$M_{pr} = N_{tr}C_{pr}R_yF_yA_{tr}l_e = (4)(1.2)(1.1)(55)(0.601)(10.72) = 1{,}871\ k - in.$$

As C_{pr} and R_y had not been determined for the connection and threaded rods at the time of the design of this test setup, values of 1.2 and 1.1 (respectively) have been assumed. As noted above, these variables are determined during the physical testing discussed below.

Step 5 – Compute the maximum shear force at the splice location, V_s.

As there are no other forces applied to the test specimen other than the load applied from the actuator, the shear force at the splice is the same as determined above, 29.6 kips. This force will be used in the design of the web splice below.

Step 6 – Design the bolted web splice to resist V_s.

The shear splice was made with two 3/8"x7 1/2" A36 plates on either side of the beam web. There were two rows of two columns of 7/8" diameter A325 bolts on either side of the splice spaced 4 1/2" both vertically and horizontally. The beam web had standard holes while the plates had horizontal short-slotted holes. The bolted shear splice was designed for the following limit states.

a. Shear yielding of the splice plates.
b. Flexural yielding of the splice plates.

c. Interaction of shear and flexural yielding for the splice plates.

d. Shear rupture of the splice plates.

e. Flexural rupture of the splice plates.

f. Interaction of shear and flexural rupture for the splice plates.

g. Plate block shear.

h. Plate buckling.

i. Bolt shear.

j. Bolt bearing on the splice plates.

k. Bolt bearing on the beam web.

<u>Shear yielding of the splice plates (AISC Equation J4-3)</u>

$$V_n = 0.6(36ksi)(2)(3/8\,")(7.5") = 122k \geq 29.6k \therefore ok$$

<u>Flexural yielding of the splice plates (AISC Equation F2-1)</u>

$$V_n = (36ksi)(2)(1/4)(3/8\,")(7.5")^2/2.25" = 169k \geq 29.6k \therefore ok$$

<u>Interaction of shear and flexural yielding for the splice plates</u>

$$CSR = (29.6k/122k)^2 + (29.6k/169\,k)^2 = 0.09 \leq 1.0 \therefore ok$$

<u>Shear rupture of the splice plates (AISC Equation J4-4)</u>

$$V_n = 0.6(58ksi)(2)(3/8\,")[7.5" - 2(1")] = 144k \geq 29.6k \therefore ok$$

<u>Flexural rupture of the splice plates (AISC Equation 9-4)</u>

$$Z_n = 2(1/4)(3/8\,")(7.5")^2 - 2(2)(3/8\,")(1")(2.25") = 7.17in.^3$$

$V_n = (58ksi)(7.17in.^3)/2.25" = 185k \geq 29.6k \therefore ok$

<u>Interaction of shear and flexural rupture for the splice plates</u>

$CSR = (29.6k/144k)^2 + (29.6k/185k)^2 = 0.07 \leq 1.0 \therefore ok$

<u>Plate block shear (AISC Equation J4-5)</u>

$0.6F_yA_{gv} = 0.6(36ksi)(2)(3/8")(6") = 97.2k$

$0.6F_uA_{nv} = 0.6(58ksi)(2)(3/8")[6" - (1.5)(1")] = 117k$

$U_{bs}F_uA_{nt} = 0.5(58ksi)(2)(3/8")[6.5" - (1.5)(2.25")] = 68.0k$

$R_n = 97.2k + 68.0k = 165k \geq 29.6k \therefore ok$

<u>Plate buckling</u>

Plate buckling is checked based upon the procedure in Part 9 of the AISC Manual for a double-coped beam and Section F11 of AISC 360-16 for rectangular bars.

$C_b = [3 + \ln(4.5"/7.5")](1 - 0/7.5") = 2.49 \leq 1.84 \therefore 1.84$

$L_bd/t^2 = (4.5")(7.5")/(0.375")^2 = 240$

$0.08E/F_y = 0.08(29{,}000ksi)/(36ksi) = 64.4$

$1.9E/F_y = 1.9(29{,}000ksi)/(36ksi) = 1{,}531$

Since $0.08E/F_y < L_bd/t^2 \leq 1.9E/F_y$,

$M_n = 1.84[1.52 - 0.274(240)(36ksi/29{,}000ksi)](36ksi)(1/6)(0.375")(7.5")^2$

$M_n = 335k - in. \leq M_p = (36ksi)(1/4)(0.375")(7.5")^2 = 190k - in.$

$V_n = 2(190k - in.)/2.25" = 169k \geq 29.6k \therefore ok$

<u>Bolt Shear</u>

From analysis, the bolt coefficient, C, is equal to 2.032. The calculation of this coefficient can be found in Appendix A.

$V_n = 2.032(0.30)(1.13)(1.0)(39kips)(2) = 53.7k \geq 29.6k \therefore ok$

<u>Bolt bearing on the splice plates (AISC Equation J3-6)</u>

$1.0l_c tF_u = 1.0[2" - (1/2)(2.25")](2)(3/8")(58ksi) = 38.1\, k/bolt$

$1.0l_c tF_u = 1.0[4.5" - (1)(1")](2)(3/8")(58ksi) = 152\, k/bolt$

$2.0dtF_u = 2.0(7/8")(2)(3/8")(58ksi) = 76.1\, k/bolt$

$V_n = 2.032(38.1\, k/bolt) = 77.4k \geq 29.6k \therefore ok$

<u>Bolt bearing on the web (AISC Equation J3-6)</u>

$1.0l_c tF_u = 1.0[2.25" - (1/2)(1")](0.340")(65ksi) = 38.7\, k/bolt$

$1.0l_c tF_u = 1.0[4.5" - (1)(1")](0.340")(65ksi) = 77.4\, k/bolt$

$2.0dtF_u = 2.0(7/8")(0.340")(65ksi) = 38.7\, k/bolt$

$V_n = 2.032(38.7\, k/bolt) = 78.6k \geq 29.6k \therefore ok$

Step 7 – Compute the probable maximum moment, M_f, at the face of the column.

$$M_f = M_{pr} + V_s S_h = 1{,}871k - in. + (29.6kips)(18") = 2{,}404\ k - in.$$

Step 8 – Check the flexural strength of the W10x49 at the face of the column.

$$M_f \leq \phi R_y F_y Z_x = 0.9(1.1)(50ksi)(60.4in.^3) = 2{,}990\ k - in. \geq 2{,}404\ k - in. \therefore ok$$

Step 9 – Check stiffening requirements at column.

Once the flange force is determined from M_f, the column needs to be checked for stiffening requirements. The column strength shall be the least of the following limit states.

a. Flange bending.
b. Web local yielding.
c. Web local crippling.
d. Web panel zone shear.

<u>Flange force</u>

$$F_f = 2{,}404k - in./(10.0" - 0.560") = 255kips$$

<u>Flange bending</u>

$$P_n = (6.25)(50ksi)(0.735")^2 = 169k < 255k$$

<u>Web local yielding</u>

$$P_n = (50ksi)(0.470")[5(1.33") + 0.560"] = 169k < 255k$$

Web local crippling

$$P_n = (0.80)(0.470")^2 \left[1 + 3\left(\frac{0.560"}{12.4"}\right)\left(\frac{0.470"}{0.735"}\right)^{1.5}\right]\sqrt{\frac{(29{,}000ksi)(50)ksi(0.735")}{0.470"}}$$

$$P_n = 285k \geq 255k$$

Therefore, stiffener plates are required per the flange bending and web local yielding checks.

Web panel zone shear

$$P_n = (0.60)(50ksi)(12.4")(0.470")\left[1 + \frac{3(12.1")(0.735")^2}{10.0(12.4")(0.470")}\right] = 234k < 255k$$

Therefore, web-doubler plates are required. However, the addition of a web-doubler plate was not included in this test setup for several reasons. First, the original RBS test specimen referenced earlier did not contain a web-doubler plate. Second, the addition of a web-doubler plate increases both the cost and complexity of the connection. Finally, the capacity listed above is close to the required load. For these reasons, it was decided that a web-doubler plate would not be added for the test specimen.

Step 10 – Compute the required shear strength at the face of the column.

As the beam in the test specimen is a cantilever with a concentrated load at its end, Equation 3-4 above need not be used as the shear at the face of the column is equal to the applied load. Therefore, the shear at the face of the column is equal to 29.6 kips.

Step 11 – Design the beam web to column flange weld.

$$f_v = 29.6kips/7.5" = 3.95\ k/in.$$

$$w \geq (3.95\ k/in.)/(0.6)(70ksi)(0.707)(2) = 0.067" \therefore \text{ Use 5/16" fillet welds}$$

$$t \geq (3.95\ k/in.)/(0.6)(65ksi) = 0.101" \leq 0.340" \therefore ok$$

Step 12 – Design threaded rod lugs.

The shear lugs will be designed for the yield strength of the threaded rods. The yield strength of each rod is:

$$(55ksi)(\pi)(0.875")^2/4 = 33.1kips$$

This load is first transferred from the threaded rod to the nut. As standard nuts are used, they can develop the yield strength of the threaded rod. The nut then transfers the load to a cross plate. This cross plate is designed to bend between the two adjacent finger plates. Due to the differing lengths of threaded rods as seen in Figure 4.2, there are three different layouts for the cross plates. The layout of the lugs is shown in Figure 4.3.

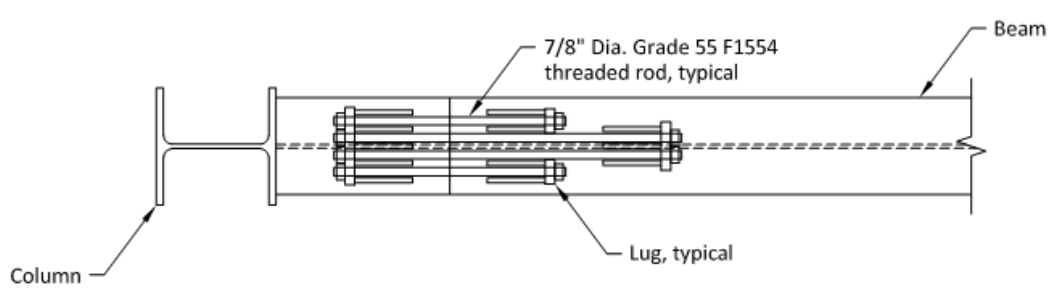

Figure 4.2 – Threaded Rod Layout

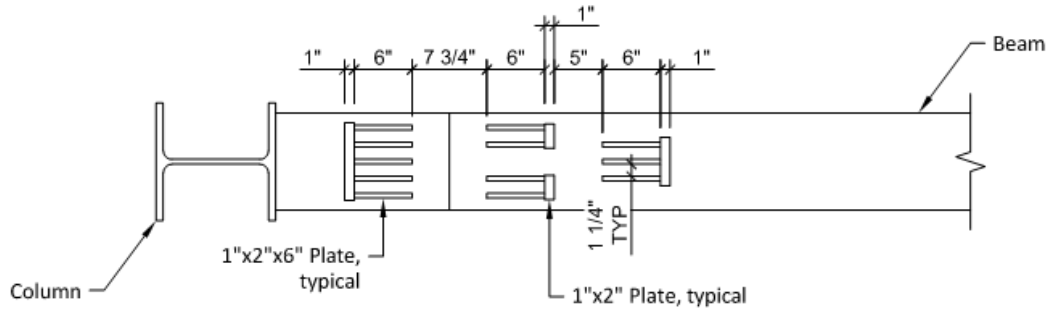

Figure 4.3 – Cross Plate Layouts

Although the nut distributes the load to the cross plate over a finite area, it can be conservatively assumed that the load from the threaded rod acts as a point load centered on the 1 ¼" span of the cross plate. The cross plate then transfers the load to the finger plates; due to the continuous plate behavior, there are both compressive and tensile "reactions" at the finger plates. These reactions are shown in the enlarged view of one of the cross plates in Figure 4.4. The outermost reactions (R_1 in the figure) will be in tension while the inner reactions will be in compression. With this assumption, the forces within the cross plates are as follows:

$$V_{max} = 17.5k \qquad M_{max} = 7.9k - in. \quad R_{max} = 21.5k \qquad R_{min} = -4.9k$$

And the capacities of the cross plate are:

$$V_n = 0.6(50ksi)(2")(1") = 60k \geq 17.5k \therefore ok$$

$$M_n = (50ksi)(2")(1")^2/4 = 25k - in. \geq 7.9k - in. \therefore ok$$

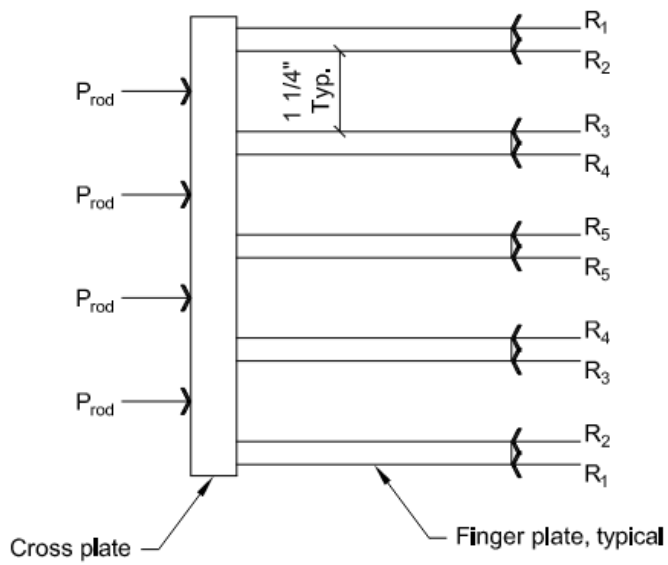

Figure 4.4 – Enlarged View of Lug

The minimum reaction listed above is in tension, and as such, needs to be resisted by the weld between the cross plate and finger plate. It is sized as:

$$f_t = 4.9kips/1.5" = 3.27\,k/in.$$

$$w \geq (3.27\,k/in.)/(0.6)(70ksi)(0.707) = 0.110" \therefore \text{ Use 1/4" fillet weld}$$

$$t \geq (3.27\,k/in.)/(50ksi) = 0.07" \therefore ok$$

The maximum reaction listed above is in compression, and as such, can be resisted by bearing between the cross plate and finger plate. Bearing requires a finite width over which it the pieces are in contact; however, the assumption above uses the full width of the finger plate to determine the reactions. If a sufficiently small width is required to resist this compressive force, the assumption will be assumed to be valid. The required width can be determined as:

$$R_n = 1.8(50ksi)(2)\left(w_{eff}\right) \geq 21.5k \therefore w_{eff} \geq 0.119" \; Say\ ok$$

Again, due to the continuous behavior of the cross plate, the maximum reaction to an individual finger plate is not equal the capacity of the threaded rod; instead, the maximum load taken by an individual finger plate is found to be 35.1k. The threaded rods are located roughly 1" above the beam flange; therefore, the weld between the finger plate and the beam flange will be designed to accommodate this eccentricity. This weld can therefore be designed as follows:

$$f_v = 35.1kips/5.5" = 6.38\,k/in.$$

$$f_t = (35.1kips)(4)/(5.5")^2 = 4.64\,k/in.$$

$$f_r = \sqrt{(6.38\,k/in.)^2 + (4.64\,k/in.)^2} = 7.89\,k/in.$$

$w \geq (7.89\,k/in.)/(0.6)(70ksi)(0.707)(2) = 0.133"$ ∴ Use 5/16" fillet welds

$$t \geq (6.38\,k/in.)/(0.6)(65ksi) = 0.164" \leq 1/2" \therefore ok$$

$$t \geq (4.64\,k/in.)/(50ksi) = 0.093" \leq 1/2" \therefore ok$$

$$t_{CSR} = [(6.38\,k/in.)/(0.6)(50ksi)(0.5")]^2 + [(4.64\,k/in.)/(50ksi)(0.5")]^2$$

$$t_{CSR} = 0.22 \leq 1.0 \therefore ok$$

Step 13 – Determine pretension for threaded rods.

Typically, the threaded rods should be pretensioned so that the moment generated in the member due to load combinations excluding seismic load will not cause a gap to open in the splice connection. This can be accomplished by determining the flange force due to this moment, and then applying a total pretension in the threaded rods equal to this flange force.

The pretension in the threaded rods will place the beam flanges in compression. This compression will need to be overcome before a gap will open at the flanges. For the experimental case, there is no reduced moment to design for; therefore, a pretension of 14 kips (roughly 40% of the specified yield strength) per rod has been arbitrarily chosen.

4.2.2.1 Connection Test Setup

With the information determined above, the physical test specimen can be detailed. The specimen that was tested is shown in Figure 4.5. The test was performed in a horizontal arrangement on the floor of the testing laboratory. As can be seen in this figure, hydraulic rams are located near the end of the beam six feet from the column centerline; these will induce displacement to the beam end. These rams were user controlled and advanced to the specified displacement resulting in the required rotation for each step. The displacements that would produce the required rotations are shown in Table 4.1. These displacements are based on the fact that the LVDT measuring the maximum displacement was located at 79.75 inches from the centerline of the column (see Figure 4.7 for location of LVDT). In lieu of using one hydraulic ram which would both push and pull the end of the beam, it was decided to use two rams on either side of the beam. One ram would be retracted while the other pushes the beam end.

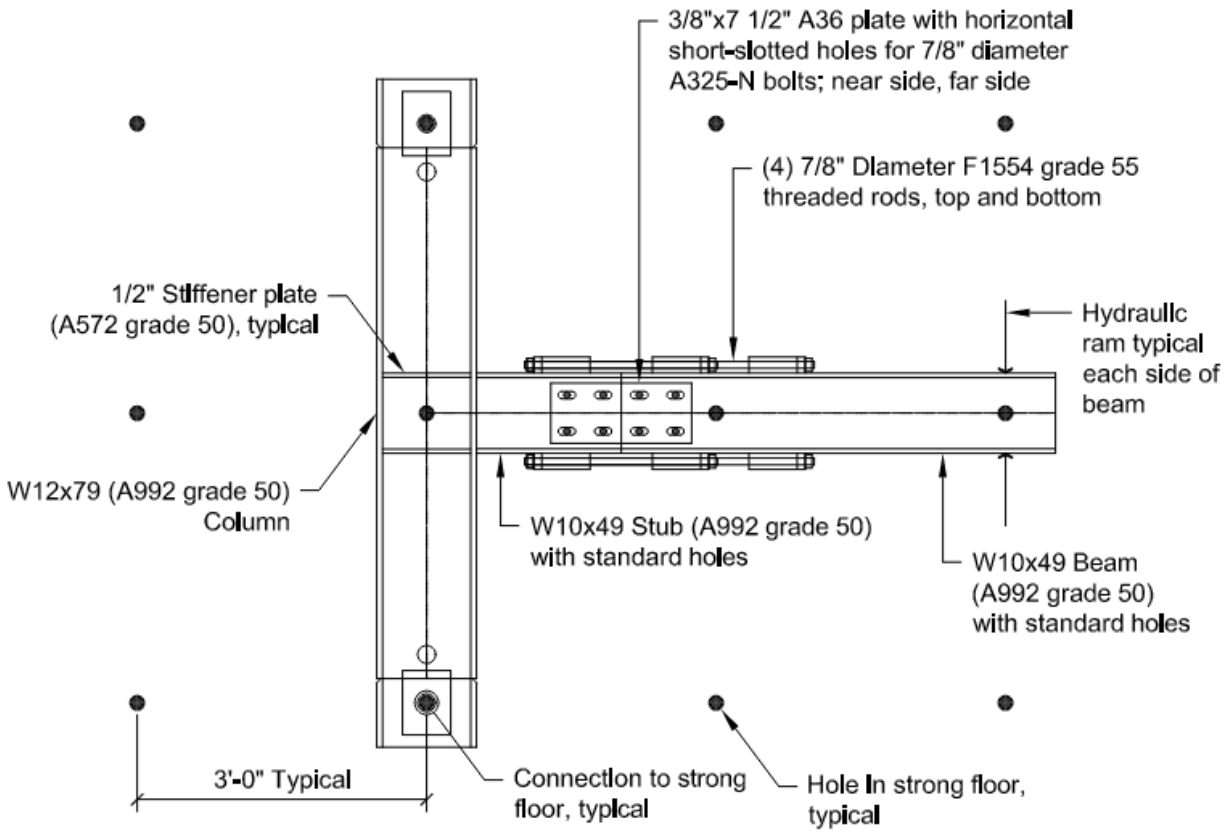

Figure 4.5 – Detail of Test Specimen

Test Step	Target Rotation (*Radians*)	Target Displacement (*In.*)
1	0.00375	0.299
2	0.005	0.399
3	0.0075	0.598
4	0.01	0.798
5	0.015	1.196
6	0.02	1.595
7	0.03	2.393
8	0.04	3.192
9	0.05	3.991
10	0.06	4.791
11	0.07	5.592

Table 4.1 – Target Test Displacements

There are many possible opportunities for data acquisition in this specimen. The most important data to collect, however, includes information regarding the imposed displacements

as well as the required loading for these imposed displacements. With these two pieces of information, the moment versus rotation relationship of the specimen can be determined. Therefore, load cells, strain gages, linear variable displacement transducers (LVDT), and string pots were positioned throughout the specimen to collect pertinent data. Load cells were located at the end of each hydraulic ram as well as the end of each threaded rod. Strain gages were attached to each threaded rod as well as the column, beam, and web plates as shown in Figure 4.6. From the information obtained from these strain gages, one can determine if and when the threaded rods yielded as well as if the main structural members remained elastic throughout the test. LVDTs and string pots were positioned as shown in Figure 4.7. The data obtained by the LVDTs were collected electronically while the string pot readings were recorded manually. As can be seen in this figure, the LVDT nearest the end of the beam was positioned off the beam end. This was necessary to clear the hydraulic rams and achieved by attaching a steel angle to the end of the beam which extended past the end of the beam. Figure 4.8 then shows a summary of all load cells, strain gages, LVDTs, and string pots located on the test specimen as well labelling used for these items; note that the label LVDT7 was not used.

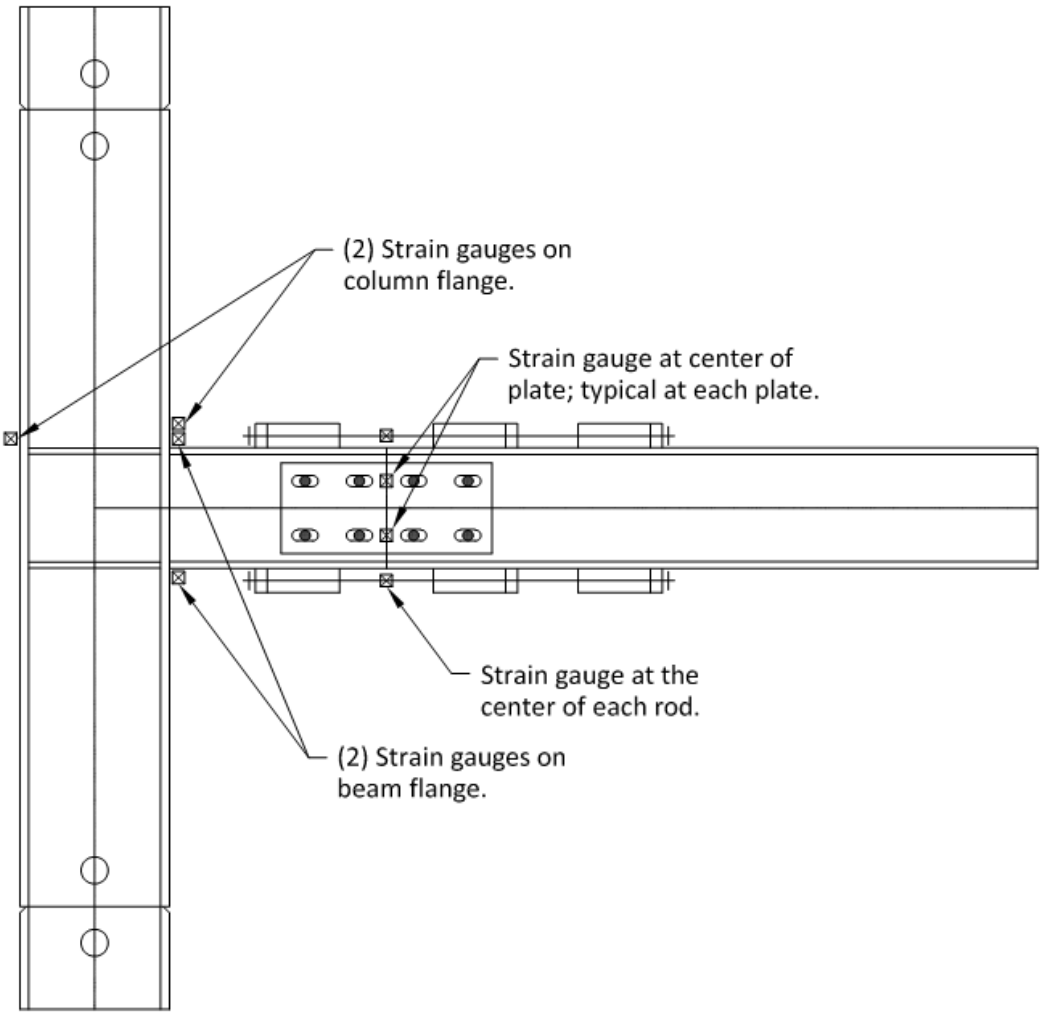

Figure 4.6 – Strain Gauge Locations

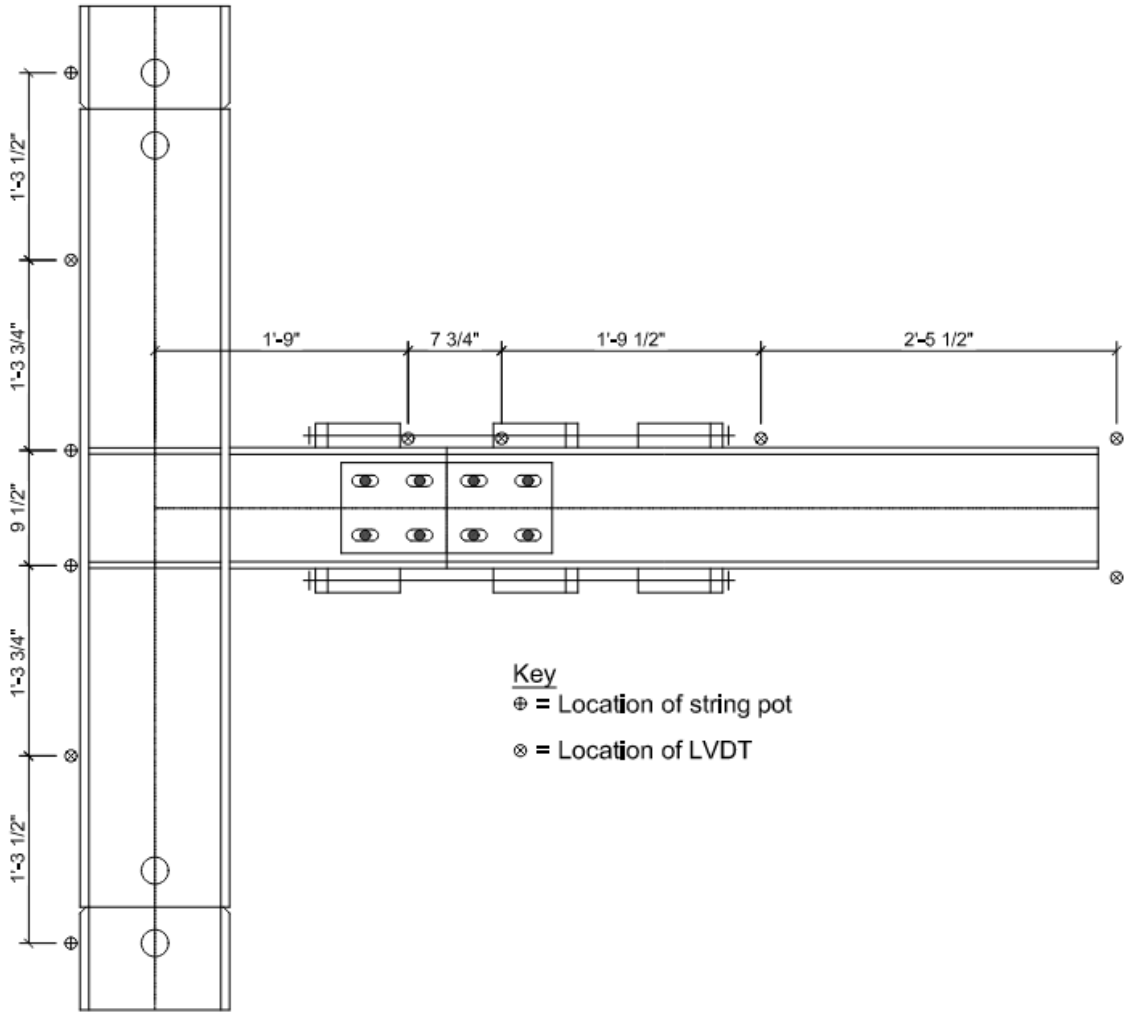

Figure 4.7 – LVDT and String Pot Locations

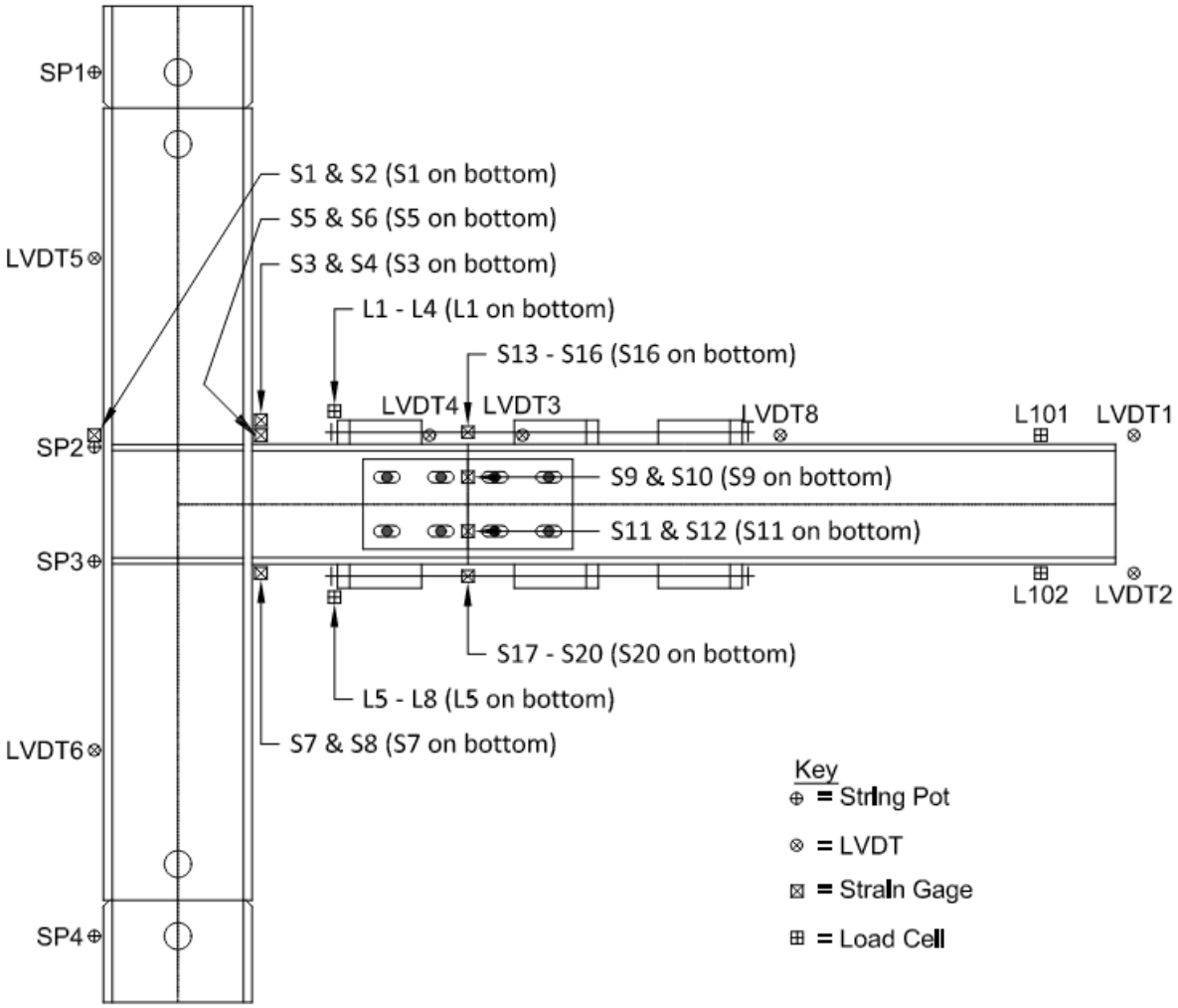

Figure 4.8 – Sensor Naming Convention

4.3. Data Collection and Analysis

After the physical testing was complete, the data were organized and analyzed. Data from the threaded rod tension tests were used to produce stress-strain curves for the threaded rods. These curves were used to determine the yield and ultimate stresses of the threaded rods. This information would be necessary to analyze the behavior of the overall test specimen.

A large amount of data was collected during the test. These were later used to verify the behavior of the analytical models discussed below. Most importantly is that with the displacements measured, the rotation of the specimen can be determined and used in the moment versus rotation relationship for the specimen.

Data collected from the load cells attached to both the hydraulic rams and threaded rods were used to determine the moment in the specimen and behavior of the threaded rods respectively. The strain gages attached to the beam were used to verify that the beam was not experiencing yielding during the test.

4.4. Finite Element Analysis

After the data from the physical testing were analyzed, a computer model was generated to try to replicate the specimen behavior observed during the physical testing phase. The computer program SAP2000 was used for the finite element model. Nonlinear behavior of the threaded rods is of critical importance when creating this model. Finally, the experimental and analytical results were compared and evaluated.

4.5. Example Problem

An example problem was created and worked through to show how an engineer would design the connection in a hypothetical situation. This is an important step in showing the practical nature of the proposed YTR moment connection.

CHAPTER 5

PHYSICAL TEST RESULTS

5.1. Threaded Rod Tension Tests

A typical specimen of the machined threaded rod used for tension testing can be seen in Figure 5.1. As seen in this figure, a portion of the threaded rod was machined to fit into the Instron machine. The center portion of these specimens was then machined further to force yielding to occur in this center section.

Figure 5.1 – Typical Threaded Rod Tension Test Specimen

The test setup for the threaded rod tension tests is shown in Figure 5.2. The pertinent parts of the test are labeled in the figure for reference. Prior to testing the threaded rods, the diameters of each specimen were measured at the reduced cross section. With this information, the cross-sectional area of the threaded rod specimens could be determined; this data can be seen in Table 5.1. In this table, the specimens are noted as X-X. The first "X" designates the day the test was performed (over the course of two days) while the second "X"

indicates the specimen number on that day. The threaded rods were then loaded until fracture; a representative post-fracture specimen can be seen in Figure 5.3.

Specimen	Diameter (*in.*)	Area (*in.*^{2})
1-1	0.319	0.0799
1-2	0.317	0.0789
1-3	0.316	0.0784
2-1	0.316	0.0784
2-2	0.316	0.0784
2-3	0.315	0.0779

Table 5.1 – Geometric Properties of Threaded Rod Tension Test Specimens

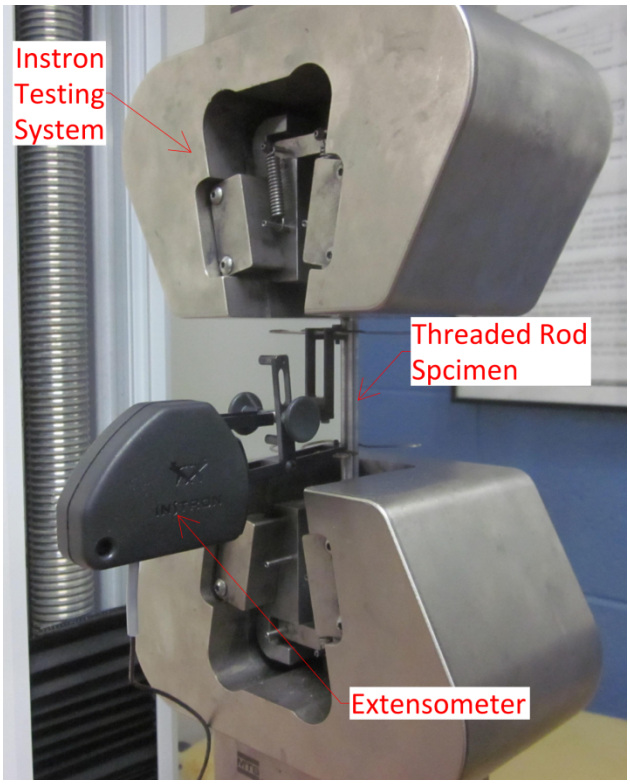

Figure 5.2 – Threaded Rod Tension Test Setup

Figure 5.3 – Typical Post-Fracture Threaded Rod Tension Test Specimen

The data collected from the Instron machine included time, extension and load. The extensometer collected strain data. As mentioned in Chapter 3, the extensometer was removed prior to yielding of the threaded rod specimens. This was done to ensure damage did not occur to the extensometer. However, this eliminated the direct collection of strain values after its removal. Therefore, the data collected from the Instron machine was used to calculate the strain after the extensometer's removal up until fracture of the specimen. This was done by using the equation $\epsilon = \delta/L$ to determine the strain where δ was the extension measured by the Instron machine. As the initial extensions measured by the Instron machine were considered to be unreliable, due to initial slippage of the specimen, the strains determined from the data collected by the Intron machine was calibrated to match that found from the extensometer. This was done by calculating the modulus of elasticity, E, based on the extensometer data, and then adjusting the data collected by the Intron machine to match. A representative stress-strain curve for the threaded rod specimens can be seen in Figure 5.4. For this curve, stress was calculated from the load data collected by the Instron machine divided by the cross-sectional area listed in Table 5.1. Strain data is plotted directly from the extensometer for pre-yield while the strain post-yield was determined from the process

discussed above. Stress-strain curves for all threaded rod specimens are presented in Figure 5.5.

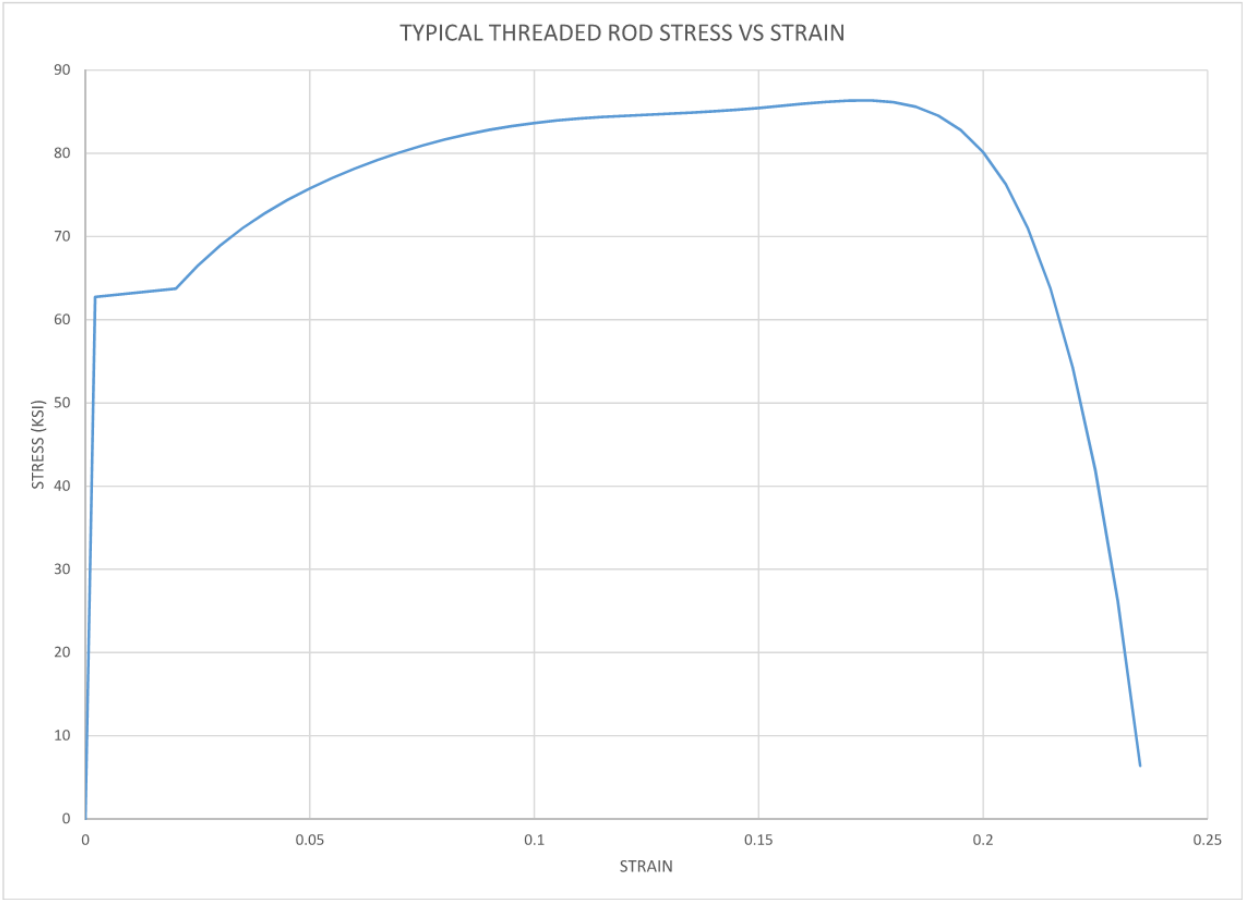

Figure 5.4 – Typical Threaded Rod Stress – Strain Curve

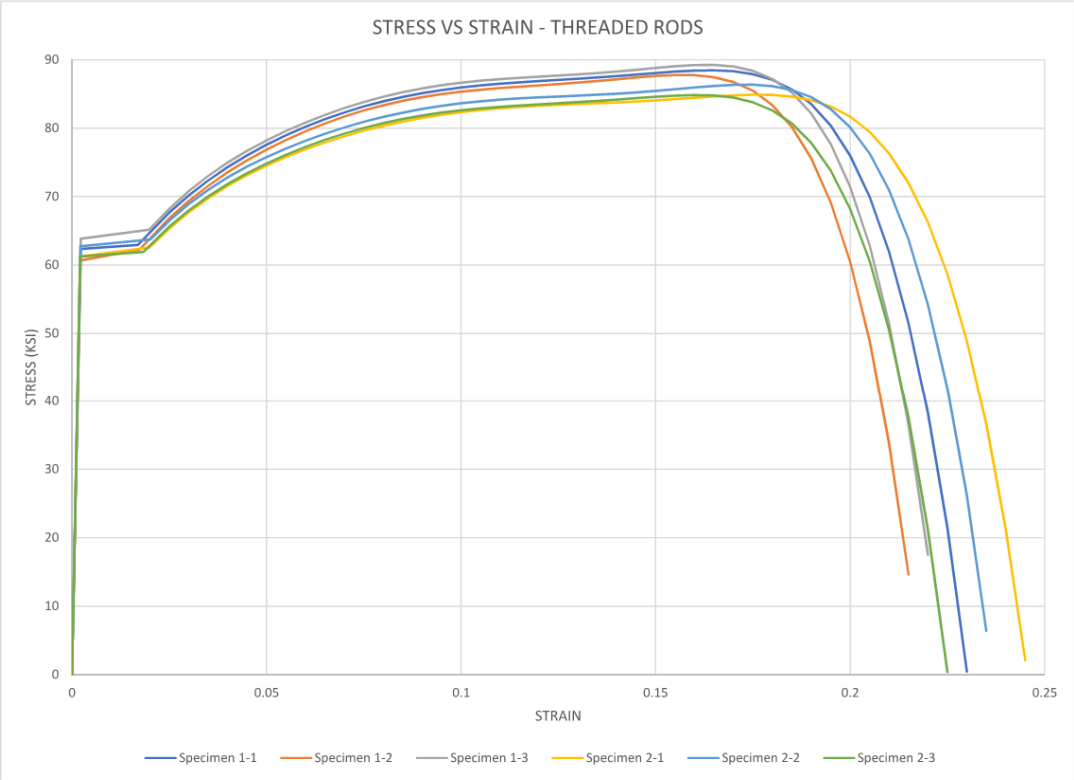

Figure 5.5 – Summary Stress – Strain Curve for Threaded Rods

From the stress-strain curves above, it can be seen that all of the threaded rod specimens had a fairly consistent yield and ultimate stress. The results from the threaded bar tension tests are presented in Table 5.2.

	Test 1-1	Test 1-2	Test 1-3	Test 2-1	Test 2-2	Test 2-3	Mean	Standard Deviation
Yield Stress (ksi)	62.0	60.7	63.9	61.8	62.3	61.0	62.0	1.03
Ultimate Stress (ksi)	88.4	87.8	89.3	84.9	86.4	84.8	86.9	1.71

Table 5.2 – Threaded Rod Test Data

From this information, we can determine a suitable R_y factor for the threaded rods. From the data above:

$$R_y = 62ksi/55ksi = 1.13$$

From these results, it will be assumed that R_y=1.15 for GR 55 F1554 threaded rod.

This data will also be used to rationalize the factor to account for peak connection strength, C_{pr}. Per AISC 358-16 Section 2.4.3 Equation 2.4-2,

$$C_{pr} = \frac{F_y + F_u}{2F_y} \leq 1.2$$

In this equation, F_y and F_u are the specified minimum yield stress and tensile strength of the yielding element. Table 5.3 below summarizes the C_{pr} factor for the both the tested threaded rods as well those determined from the specified nominal strengths. From this table, it is recommended that C_{pr} be taken as 1.2 for ASTM F1554 Gr. 55 threaded rods.

	Minimum Yield Stress (ksi)	Minimum Tensile Strength (ksi)	C_{pr}
Gr. 55 (Specified)	55	75	1.18
Gr. 55 (Test)	62.0	86.9	1.20

Table 5.3 – Peak Connection Strength Factor, C_{pr}

Testing of full-scale threaded rod specimens was not possible due to both budgetary and laboratory limitations. Therefore, although the actual connection will utilize threaded rods without machined areas, the data collected will still serve as a basis for the analysis of the threaded rods moving forward.

5.2. YTR Moment Connection Test

The test setup for the full connection test can be seen in Figure 5.6 and is positioned horizontally on the floor. As can be seen in this figure, the column segment (on the left) is anchored to the strong floor with threaded rods. The threaded rods had collars placed around them at the holes in the strong floor to eliminate any lateral movement of the threaded rods in the hole that would have occurred due to the size difference between the threaded rods and holes. These threaded rods acted as pin connections for which the column could rotate about. The beam segment has hydraulic rams placed on the right end where the displacement was imposed. These hydraulic rams had load cells affixed to them to monitor the applied load required to impose the specified deflections. Load cells were also placed between the nuts of the threaded rods and the lug plate on one end of each threaded rod. The end of the beam is supported on pieces of wood with plastic strips between the wood and beam to reduce the amount of friction there. Also at this end, LVDTs are located to measure the imposed displacement. The remaining LVDTs and string pots can also be seen located throughout the specimen. Wood blocking was attached to the beam just to the right of the threaded rods. These were added in case the threaded rods fractured; if this were to happen, the blocking was intended to stop any piece of threaded rod from becoming a projectile. The web connection of bolted plates can also be seen in this figure.

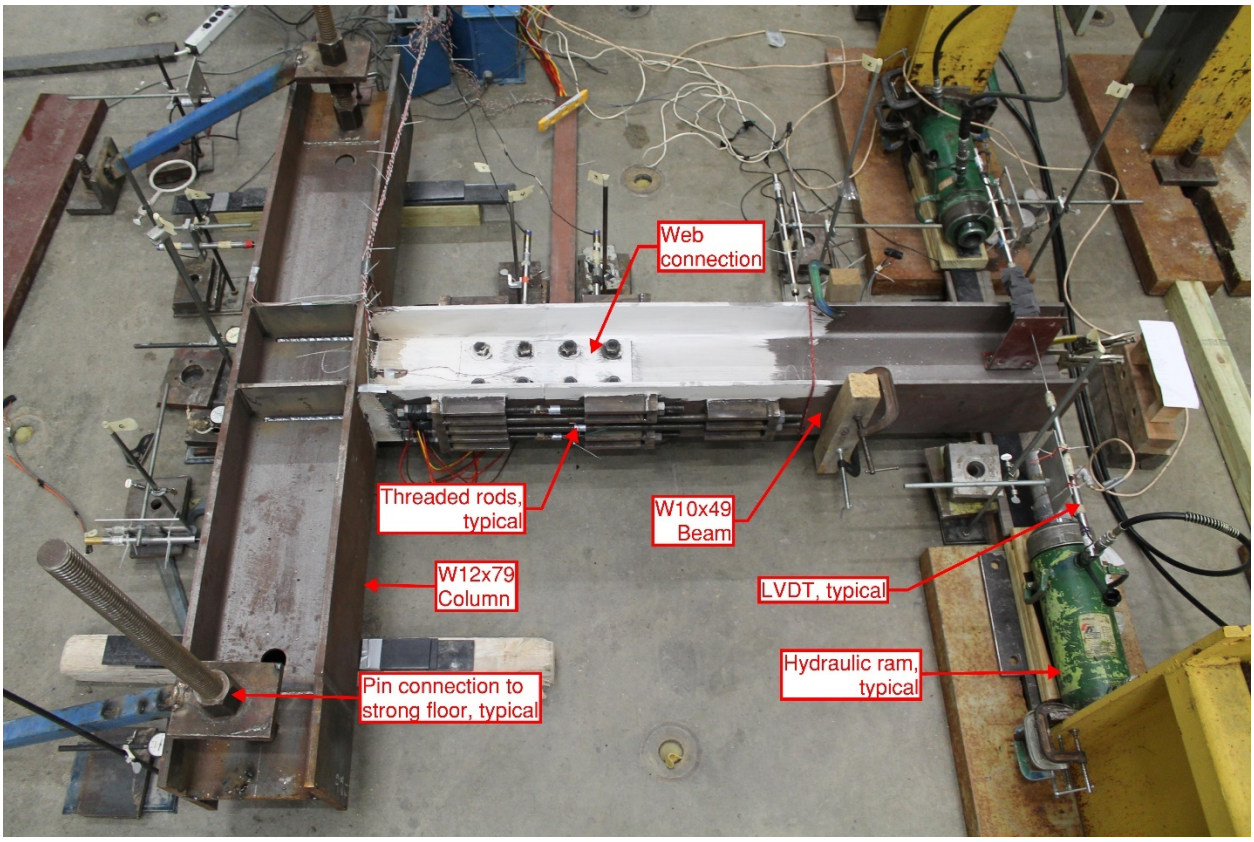

Figure 5.6 – Connection Test Setup

5.2.1. Connection Test Procedures and Observations

The beam end of the test specimen was subjected to the target displacements indicated previously in Table 4.1. As noted, these displacements result in rotations that match the specified rotations from AISC 341-16 Chapter K shown previously in Table 2.1 and Figure 2.2. The specimen was subjected to these displacements by manually controlling the hydraulic rams pushing on the beam end. Two hydraulic rams were used on either side of the beam end to impose these displacements. While one hydraulic ram pushed, the other was retracted as to not impact the test specimen.

The following discussion presents observations noted during the physical testing of the connection specimen. Due to the initial uncertainty regarding the performance of the specimen, it was decided that the loading rate be kept at a relatively slow speed. The loading rate was not set at a specific speed; instead, the hydraulic rams were extended manually at a rate deemed safe during testing.

The test specimen behaved as expected throughout most of the test procedure. As displacement was imposed by the hydraulic rams at the end of the beam, the beam and column assembly both rotated about the pin supports at the ends of the columns. This displacement of the beam end and rotation of the specimen can be seen in Figure 5.7. As the specimen rotated due to this displacement, a gap would open at the splice location; this can be seen in Figures 5.8 and 5.9. When the imposed displacements became large enough (during step 7 from Table 4.1 where the target displacement was 2.393”), the threaded rods began to yield; the target displacement from this step was producing rotation of 0.03 radians. Once yielded, a gap would be present between the threaded rod nut and lug plate while the corresponding side of the connection was in compression. This gap would have to close in subsequent cycles before the threaded rods could resist further tension. This gap can be seen in Figures 5.8 and 5.10. As the loading rate was kept at a relatively slow speed, impact forces due to this gap closing were not present.

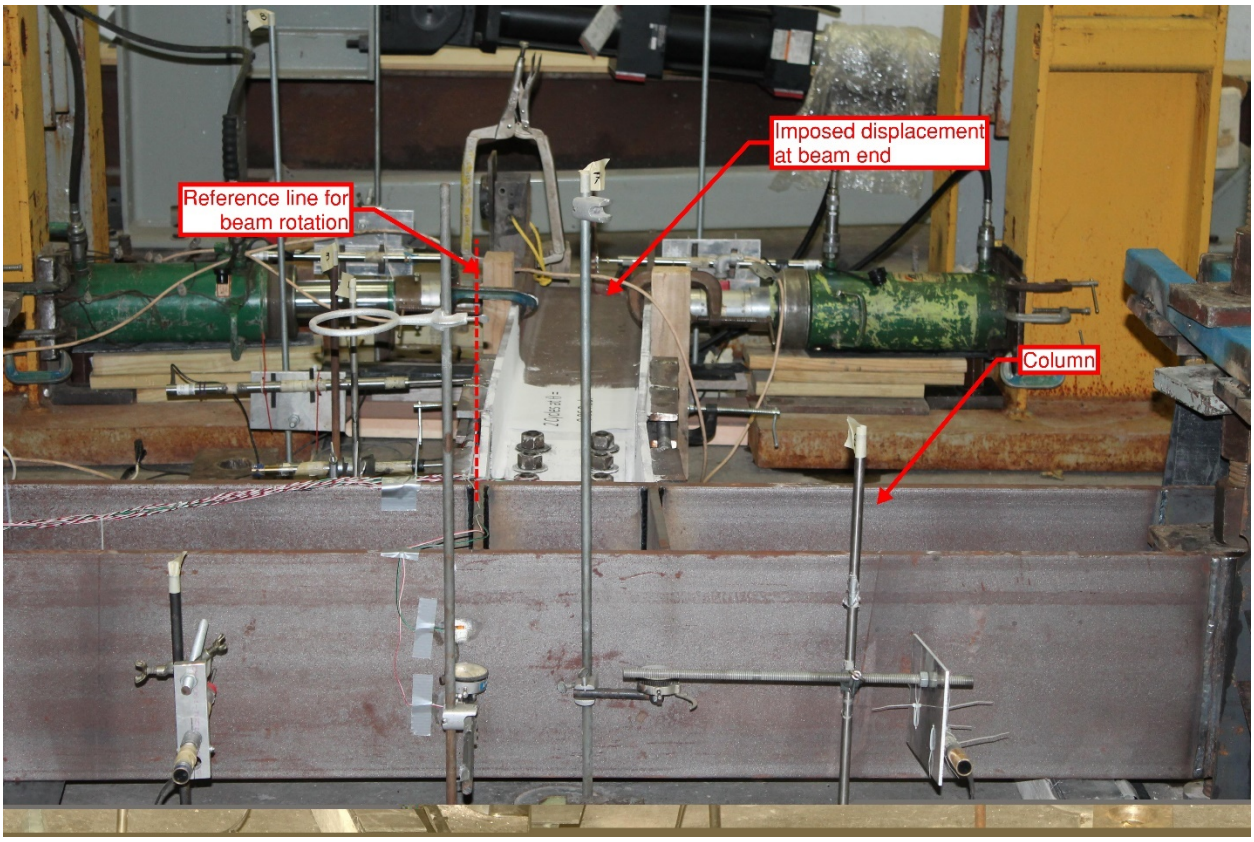

Figure 5.7 – Displacement of Beam During Testing

(View from the Back of the Column)

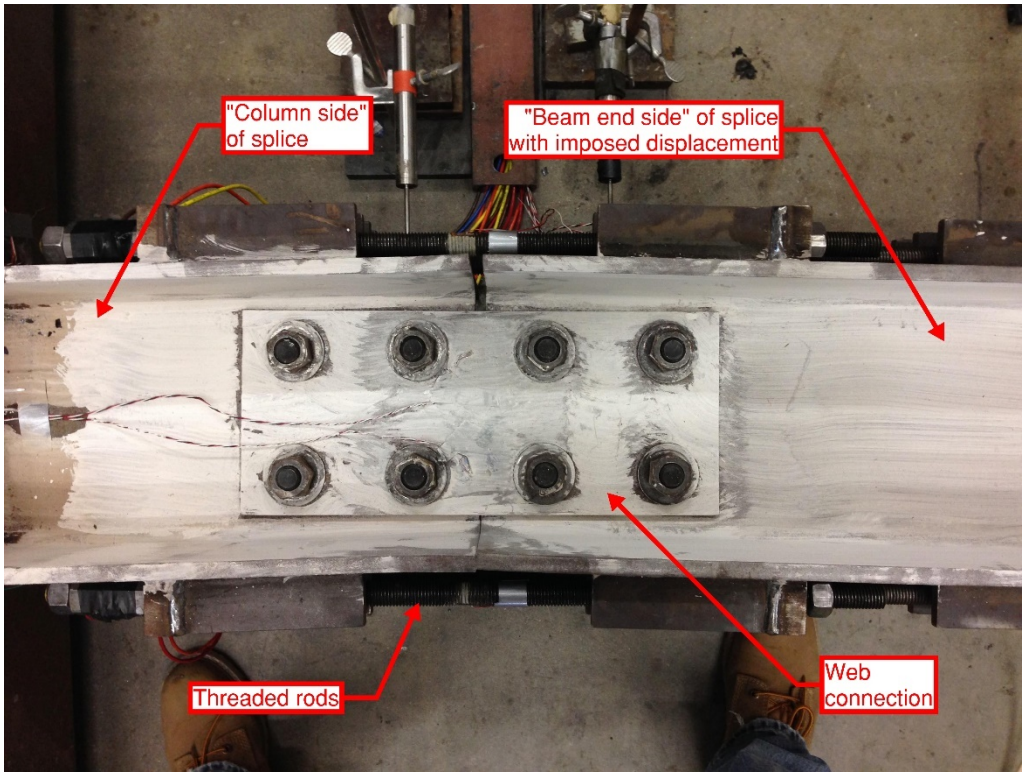

Figure 5.8 – Beam Rotation at Splice During Testing

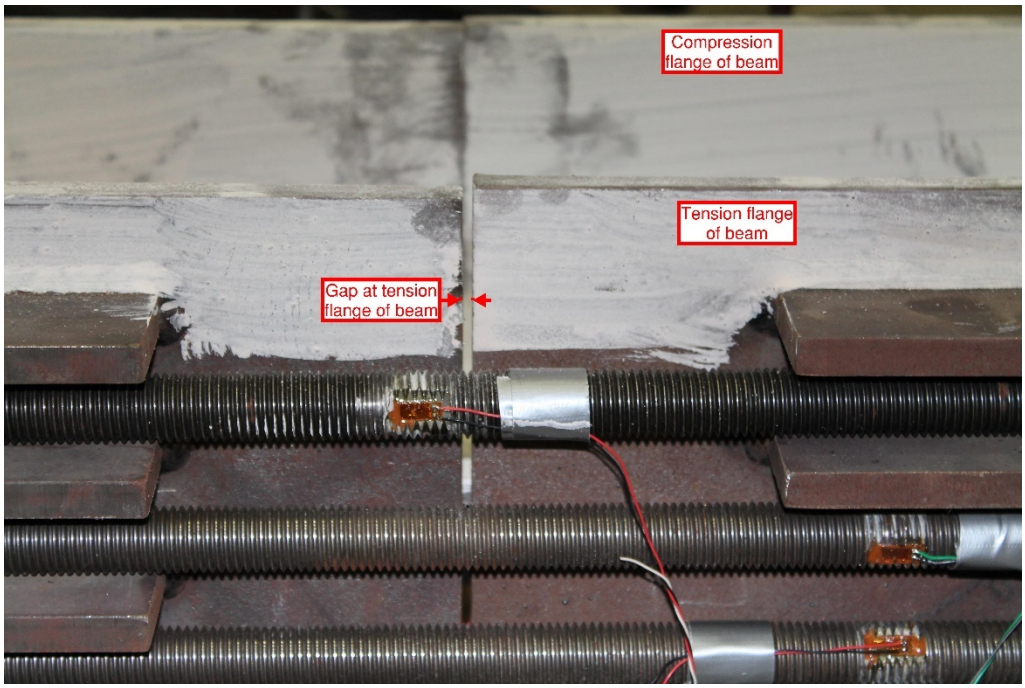

Figure 5.9 – Gap at Tension Beam Flange During Testing

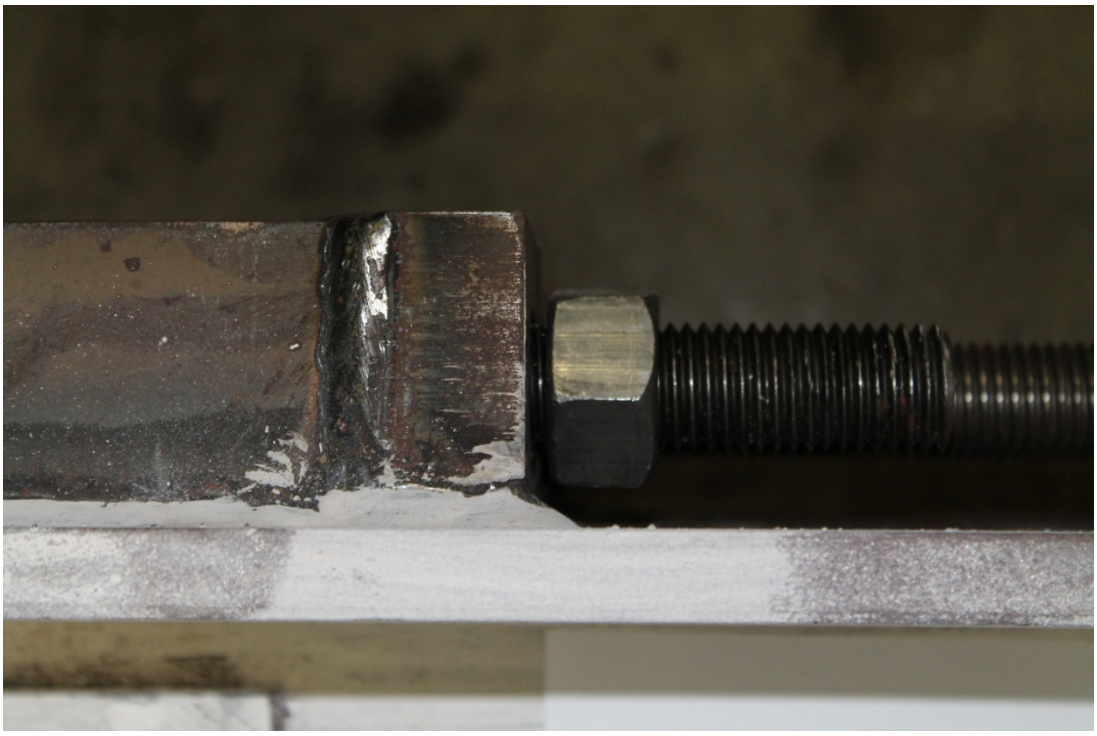

Figure 5.10 – Gap Between Threaded Rod Nut and Lug Plate

Three noteworthy events occurred during testing which were not expected prior testing started. First, it was noticed that the vertical threaded rods securing the test specimen to the floor at the ends of the column were experiencing large deformations during the 0.03 radian cycle. This deformation can be seen in Figure 5.11. Due to this, it was decided to add braces to the specimen to eliminate this bending. These braces provided some minor resistance to rotation of the specimen at the pin. The additional bracing can be seen in Figures 5.12, 5.13, and 5.14.

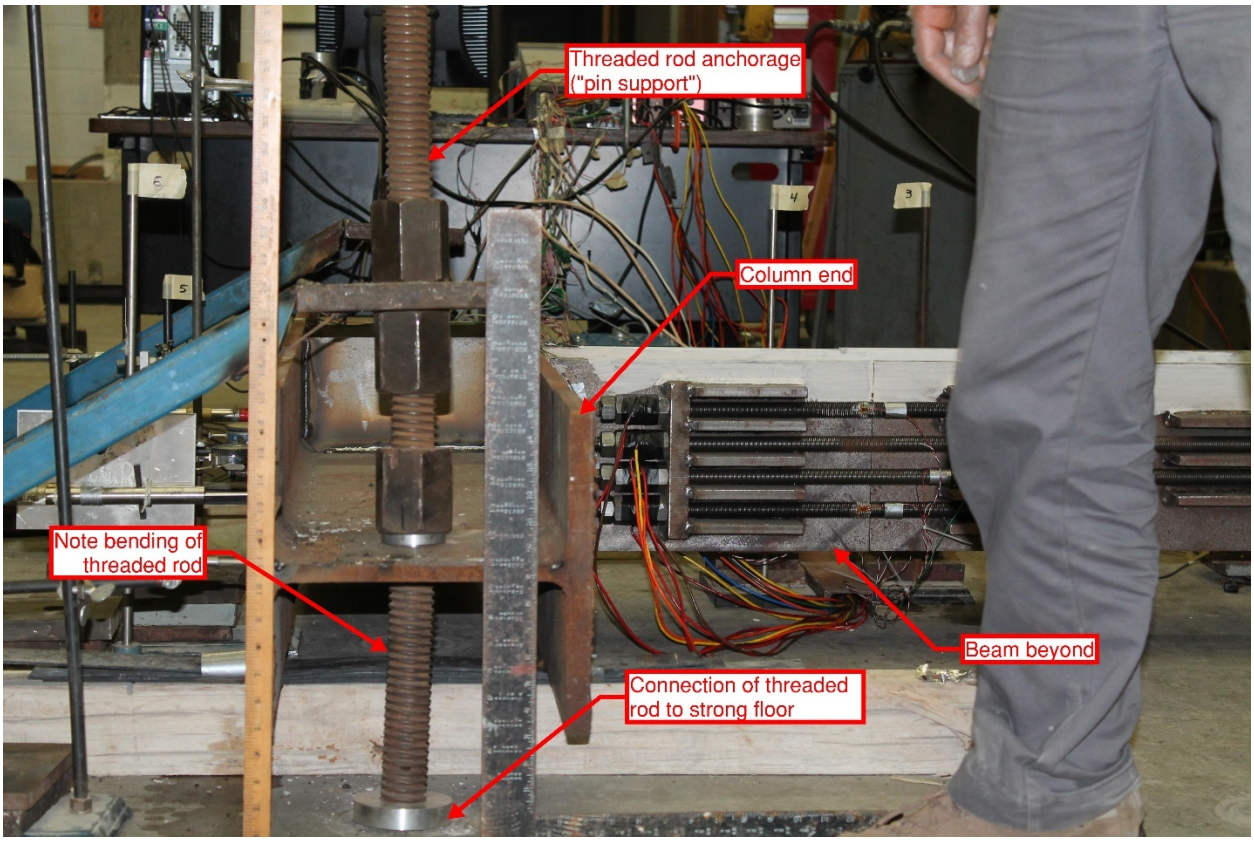

Figure 5.11 – Deformation of Specimen Anchors

(View from the End of the Column)

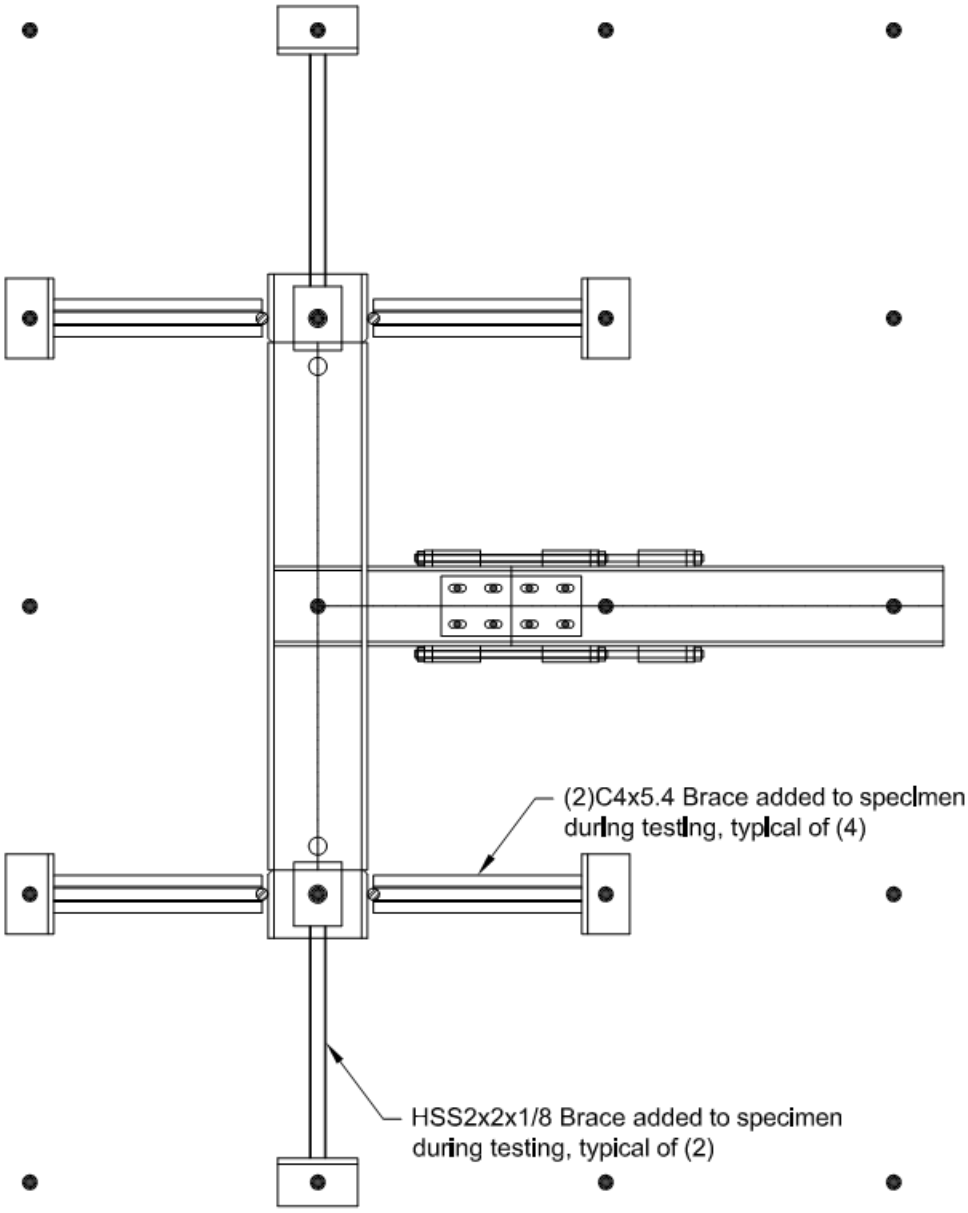

Figure 5.12 – Bracing Added to Test Specimen

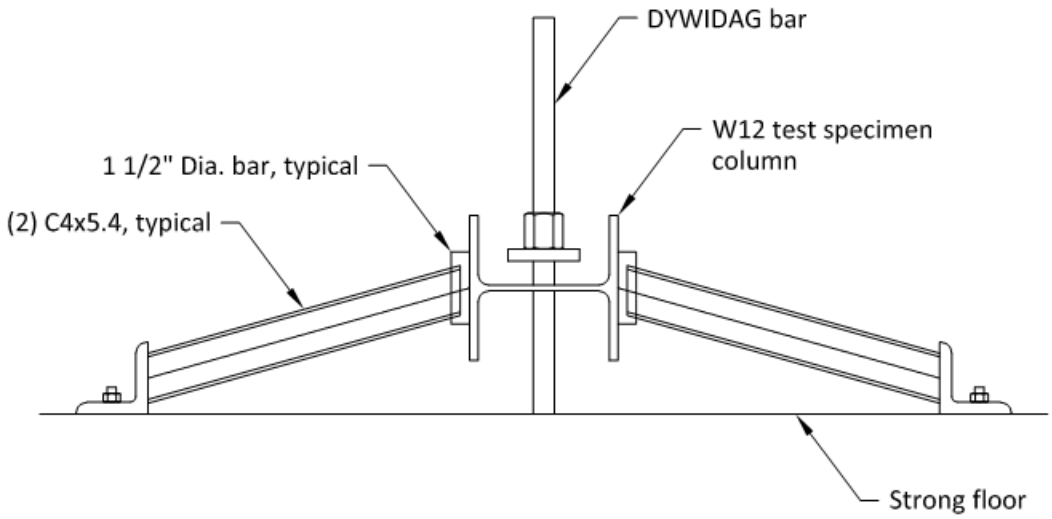

Figure 5.13 – Channel Braces at Location of "Pin" in Column Portion of Test Specimen

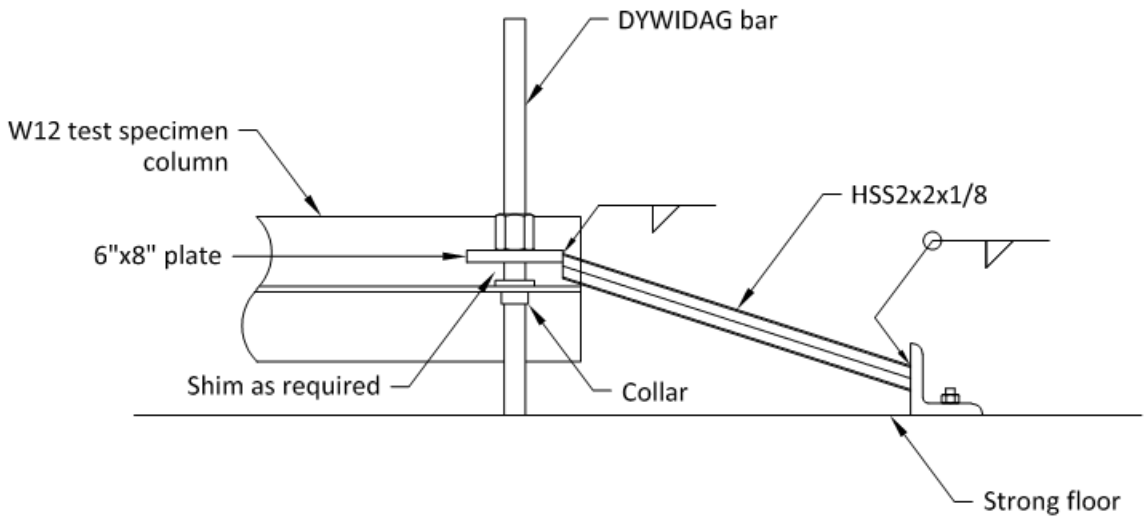

Figure 5.14 – HSS Braces at End of Column Portion of Test Specimen

Second, the beam web connection did not perform as expected as the imposed displacements increased throughout testing. Per the discussion above, the web connection was designed as a continuous span beam with the bolts taking vertical shear only. In theory, this was accomplished by placing the bolts in slotted holes and only tightening them "finger tight".

This was done to force all of the moment resistance into the threaded rods. However, during the 0.03 radian application, the web plates rotated and allowed a vertical displacement to occur at the splice location. This displacement was a sudden occurrence. As this was an undesirable behavior, the test was stopped, the splice was realigned, and the bolts were retightened. However, instead of finger tight, the bolts were installed snug tight. Snug tight is defined as bolts tightened with the full effort of an iron worker using a spud wrench. With this process of tightening the bolts, the web connection would resist a portion of the moment as well as the vertical shear. However, in typical engineering practice, a snug tight bolt is typically considered only to resist load through bearing. Therefore, until the bolts slip enough to engage the end of the slot, their effect on the moment resistance was assumed to be minimal. It should be noted that this behavior occurred shortly after the test specimen anchorage was braced as discussed above. This increased stiffness resulted in a larger force being required to impose the desired displacement. This larger force was enough to cause slippage in the web plates secured by the finger-tightened bolts.

Finally, at step 9 of the loading protocol per Table 4.1, where the imposed displacement was 3.991” to achieve a rotation of 0.05 radians, hydraulic fluid was noted as leaking from the hydraulic rams; the test was continued for several more applications up to 5.26” of displacement (equaling 0.066 radians of rotation) at which point the test was stopped. As the test specimen had experienced rotations well past the 0.04 radians required by AISC, stopping the test at point was acceptable even though failure had not been reached.

It should also be noted that there were two issues with measuring the displacements along the length of the column and beam segment. First, the sting pot readings needed to be recorded manually; as the test progressed, this was deemed a safety hazard. Second, several of the LVDTs located along the length of the beam shifted position during the testing. None of these readings were used to analyze the behavior of the specimen; therefore, these issues were not a concern.

Figure 5.15 shows a portion of one of the web plates after testing was completed. As can be seen in this figure, there is little to no deformation at the slotted bolt holes. What deformation is present appears to have been caused by the bolt head or washers as opposed to the bolt shank itself. This would seem to indicate that the bolts were resisting load through slip resistance as opposed to bearing. This is consistent with the discussion above regarding the web connection.

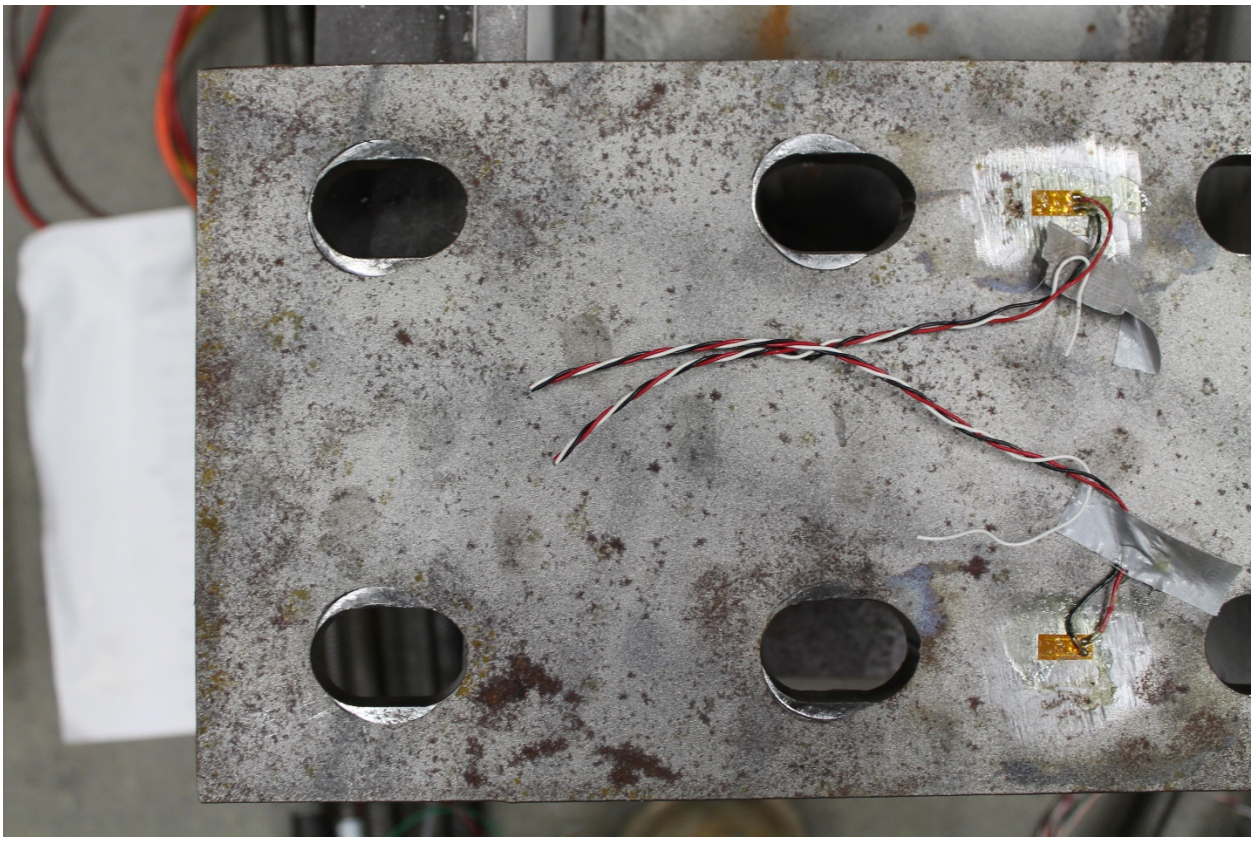

Figure 5.15 – Web Connection Plate Post Test

5.2.2. Connection Test Data

The first type of collected data to be reviewed is displacement at the test specimen's beam end and can be seen in Table 5.4. Ideally, the data would show the imposed displacements match the specified displacements exactly; however, there were variations between the two as the user-controlled aspect of the test made it difficult to obtain the imposed displacements to the accuracy specified. The displacements applied to the beam end of the test specimen can be seen in Figure 5.16. The displacement data was also manually filtered to show the maximum displacements imposed for each loading cycle; this can be seen in Figure 5.17. There are two items that can be seen in these figures. First, both the bending of

the anchorage and the slip of the web plate discussed above can clearly be seen around the 250-minute to 325-minute timeframe or between load steps 110 and 120 in the corresponding figures. During this time, the rate of applied displacement was slowed or stopped to address the issues discussed. Second, it can also be seen that there was some relief of imposed displacement mid-cycle in several of the later cycles starting around the 400 minute mark or beyond load step 129 in the corresponding figures. At this point in the testing, a cautious approach was being taken during application of displacement. As displacement was not fully reversed, a cycle was not counted until full displacement for that cycle occurred.

Test Step	Specified Displacement (*In.*)	Applied Displacement Range (*In.*)	Average Applied Displacement (*In.*)
1	0.299	0.304 – 0.330	0.318
2	0.399	0.397 – 0.421	0.410
3	0.598	0.590 – 0.621	0.608
4	0.798	0.798 – 0.810	0.804
5	1.196	1.19 – 1.21	1.20
6	1.595	1.59 – 1.62	1.60
7	2.393	2.34 – 2.42	2.38
8	3.192	3.14 – 3.23	3.19
9	3.991	3.94 – 4.22	4.05
10	4.791	4.75 – 4.82	4.78

Table 5.4 – Comparison of Applied and Specified Displacements

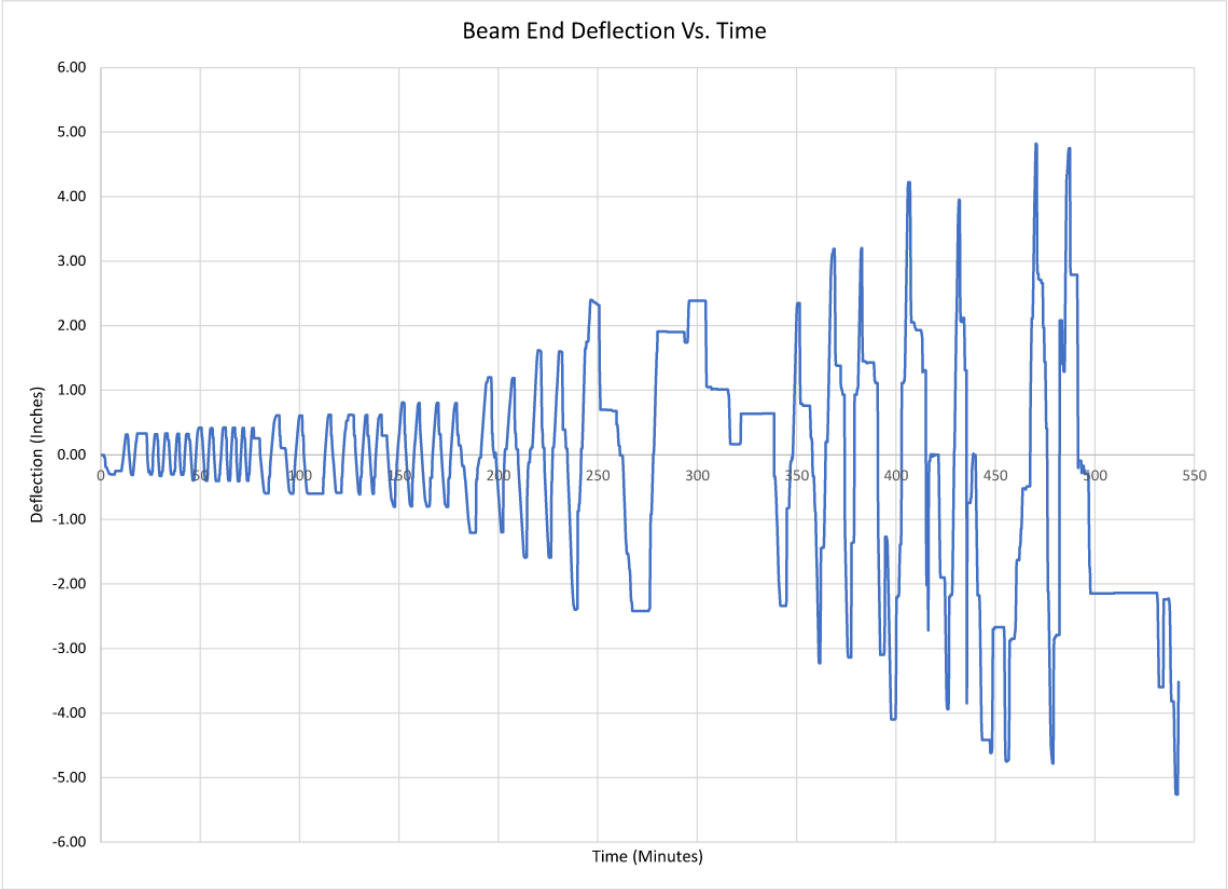

Figure 5.16 – Beam End Deflection Vs. Time

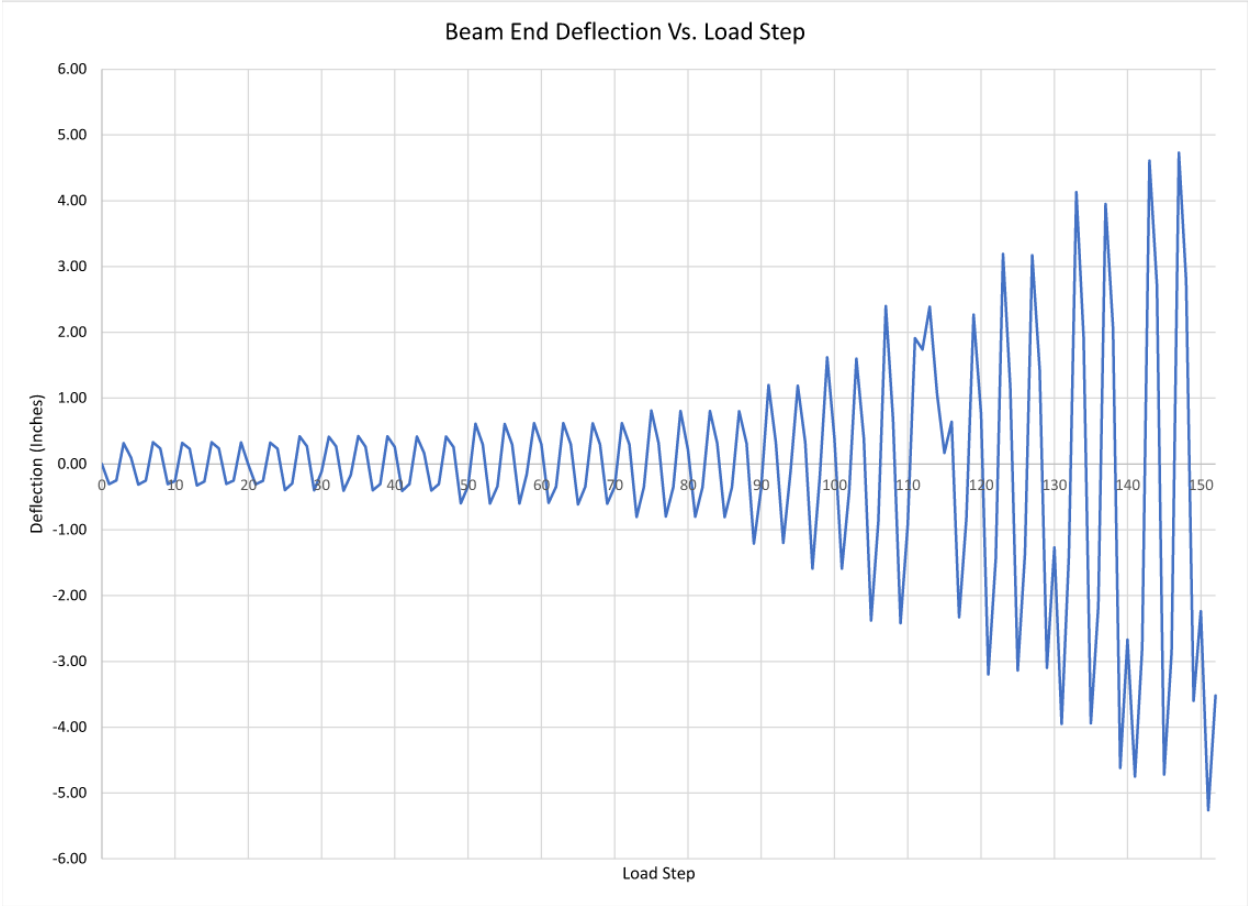

Figure 5.17 – Beam End Deflection Vs. Load Step

From the applied displacements, rotation of the test specimen can readily be determined by taking the applied displacement and dividing by the distance from the column centerline to the LVDT location. As noted previously, this distance is 79.75” for the test specimen. The rotations are required so that the moment versus rotation of the test specimen can be determined. The rotations versus time can be seen in Figure 5.18. This data was also manually filtered to show the maximum rotations achieved for each load step; this can be seen in Figure 5.19. One thing that can be noticed in these figures is that an extra cycle of 0.03 radians was applied. This additional cycle was applied since during the second cycle a slippage

of the web connection occurred. Due to this slippage, a cycle was added in case the specimen had not experienced a full 0.03 radian rotation.

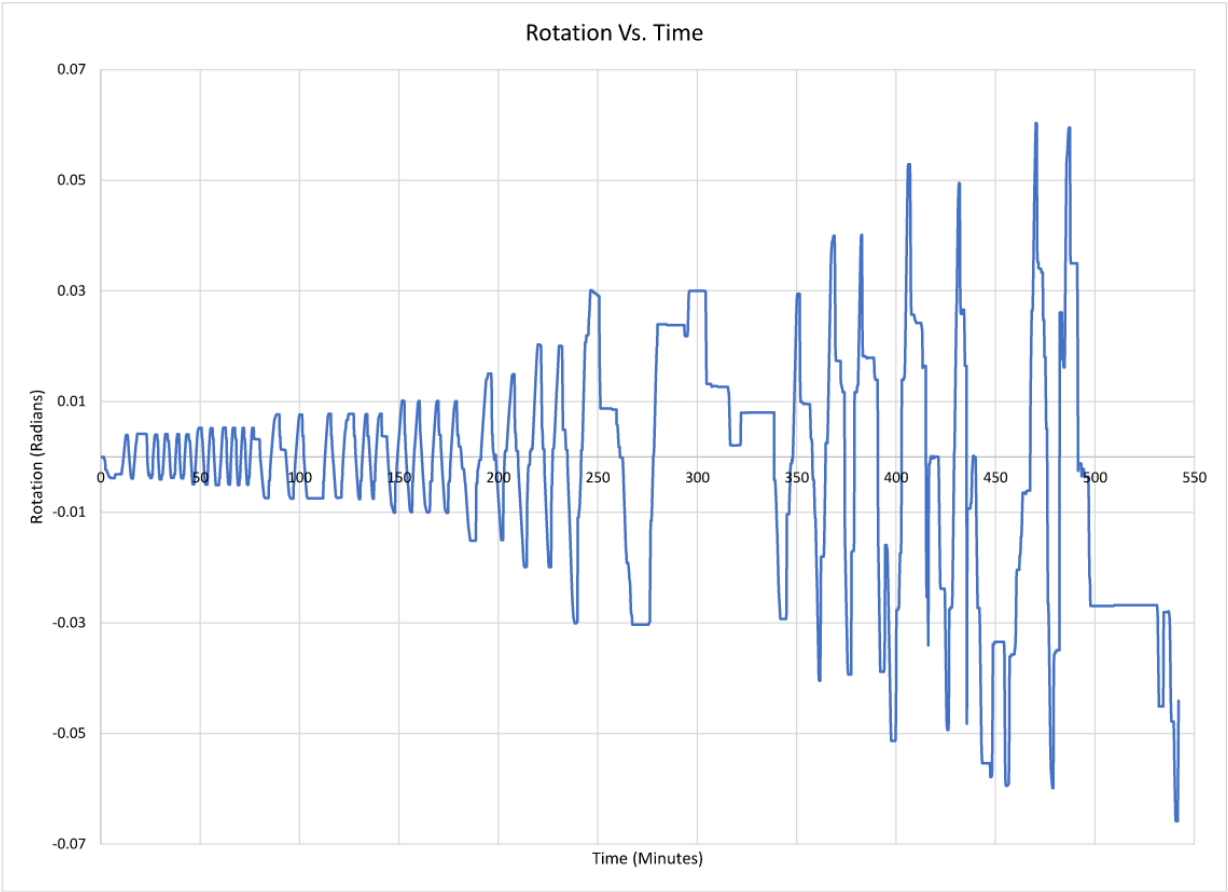

Figure 5.18 – Rotation Vs. Time

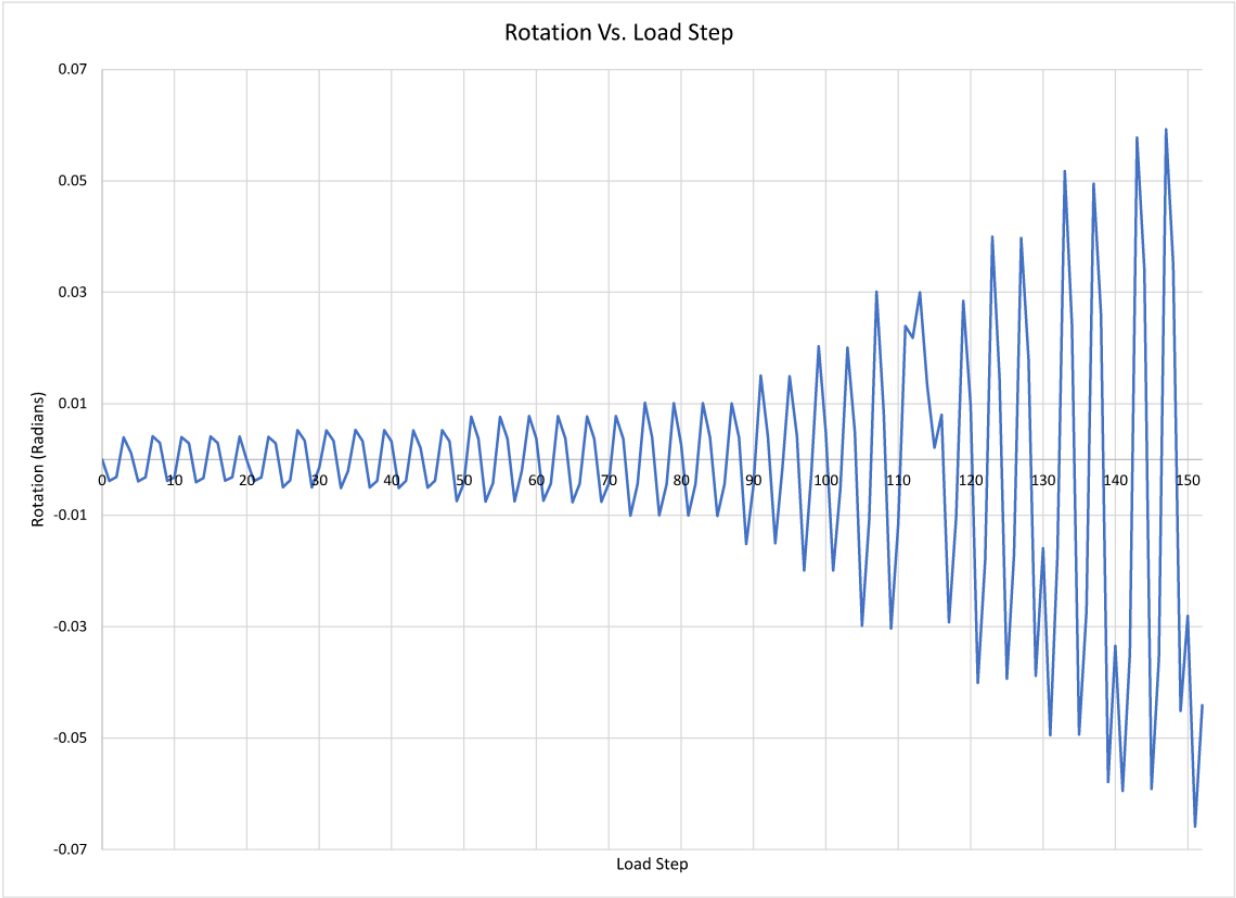

Figure 5.19 – Rotation Vs. Load Step

Another piece of collected data was the load required to achieve the imposed displacements. This can be seen in Figure 5.20. Again, this data was filtered manually to show maximum load per load cycle which can be seen in Figure 5.21. An important point to recognize in these figures is the discrepancy in loading during the 0.03 radian cycles. Prior to recognizing the bending of the anchorage, a load of roughly 14 kips was applied to achieve the specified displacement for the 0.03 radian cycle. However, once the anchorage was stiffened, a load of roughly 27 kips was needed to achieve the specified displacement for the 0.03 radian cycle. As discussed previously, during this application, the web connection slipped due to the

increase in load. After the web connection was realigned and the bolts tightened, a load of roughly 31 kips was required to achieve the specified displacement for the 0.03 radian cycle. This increase in required load is a direct response to the increase in stiffness of the specimen as a result of the restraint of the lateral movement of the pinned connections at the ends of the columns.

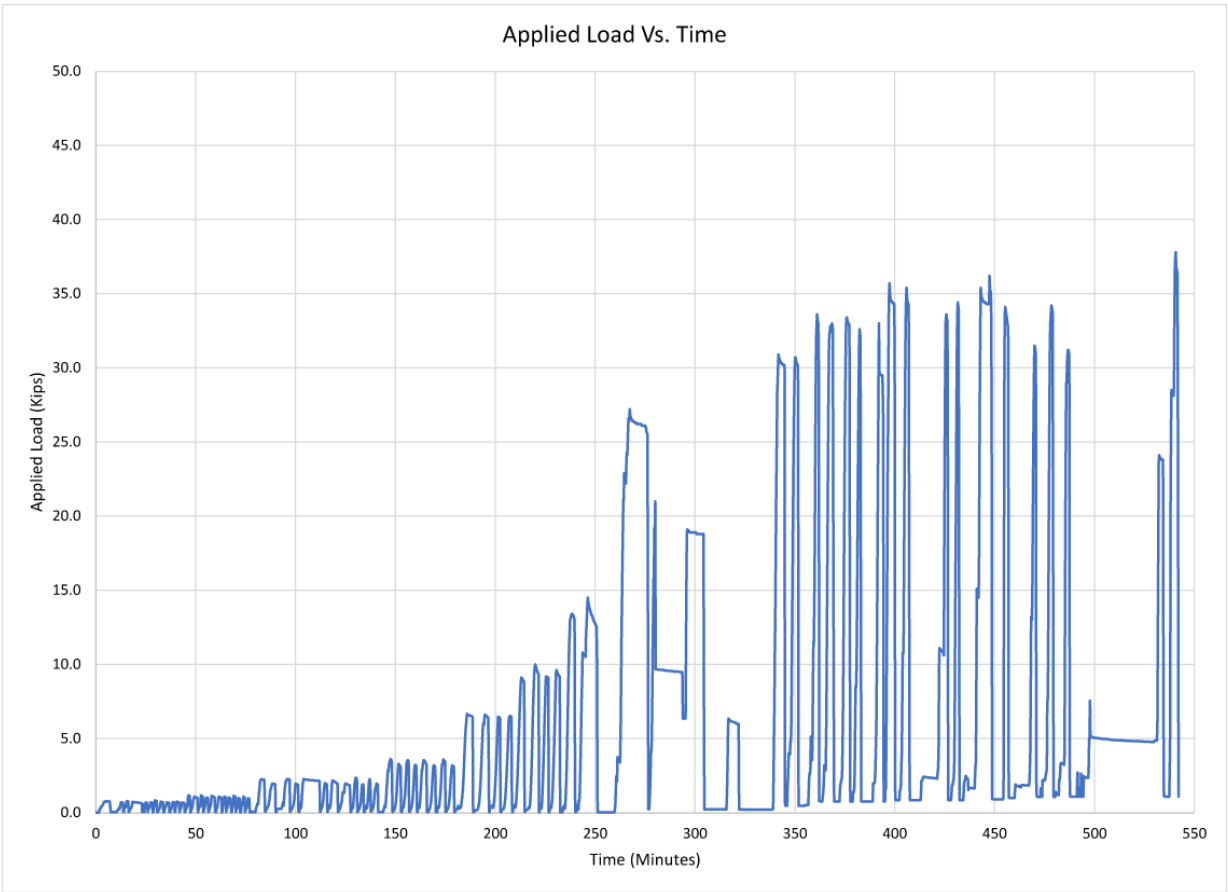

Figure 5.20 – Load Vs. Time

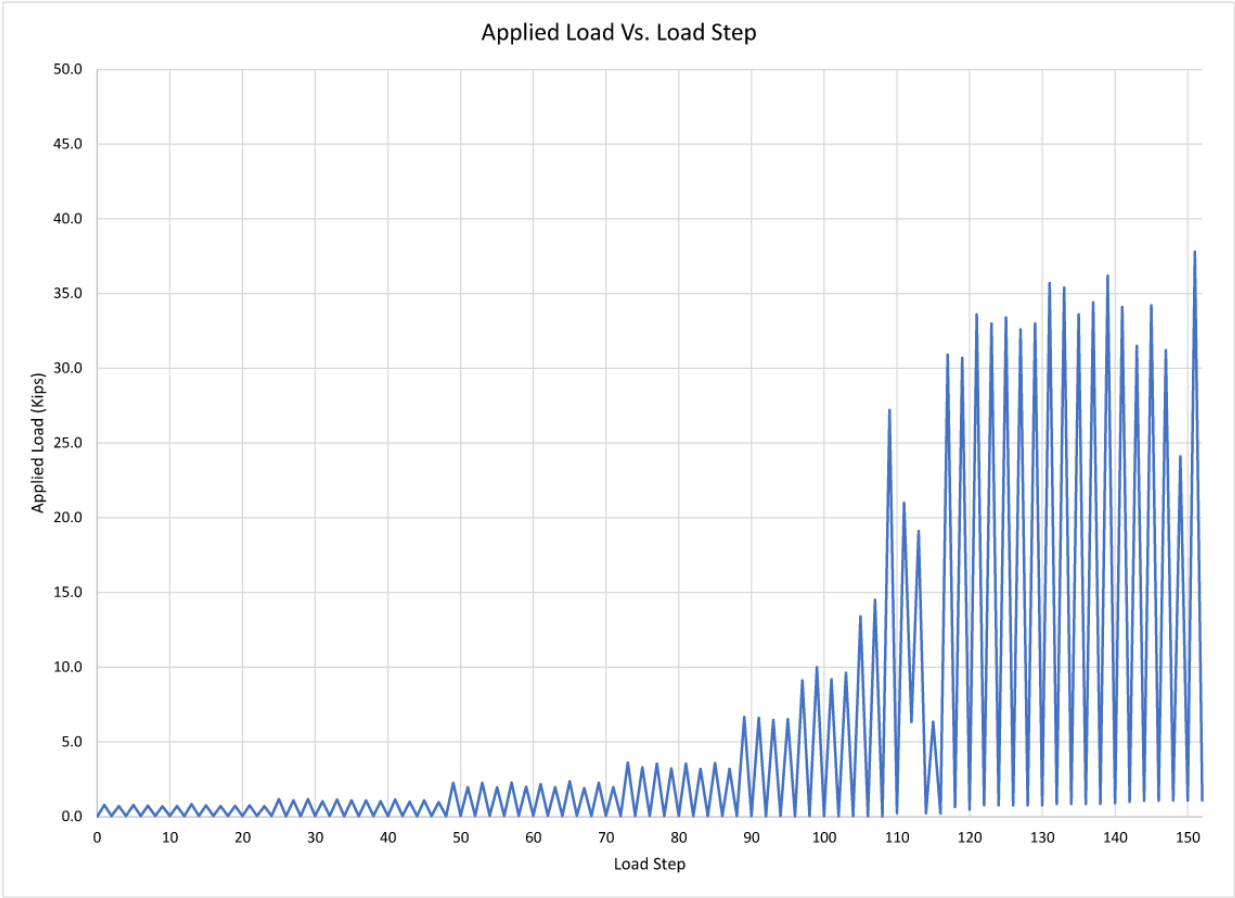

Figure 5.21 – Load Vs. Load Step

With the applied load versus time established, the next step is to determine the applied moment at each load step. This is done by multiplying the applied load by 47.8 inches which is the eccentricity from the load point to the splice location. Once this is calculated for each time step, a moment versus rotation graph can be generated. This hysteresis loop can be seen in Figure 5.22.

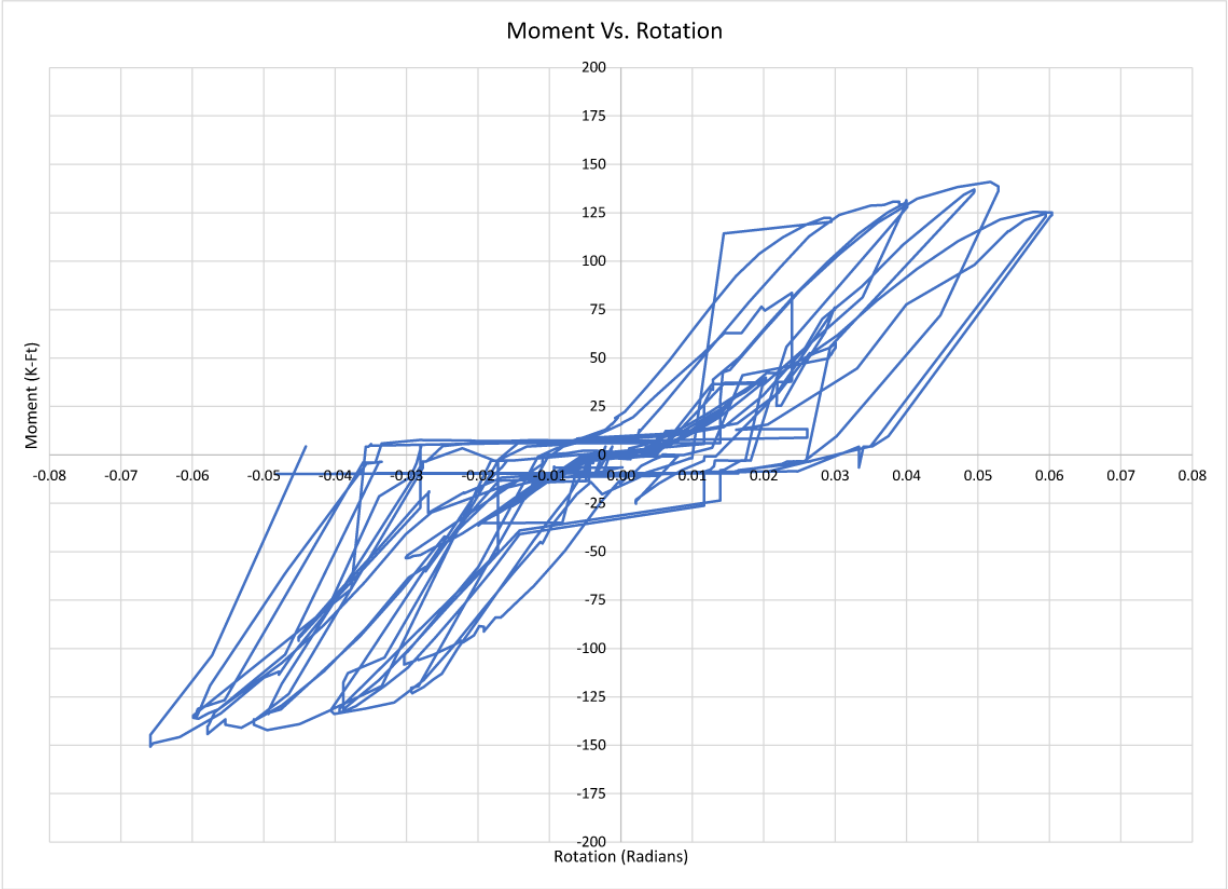

Figure 5.22 – Hysteresis Loop for Test Specimen

Several key items can be seen from the hysteresis loop. First, the overall shape of the hysteresis loop resembles that of typical flag-shaped hysteresis loop. This shape is to be expected as it results from the "pinching" behavior of the test specimen. Typically, pinching in a hysteresis loop is the result of the opening and closing of cracks or gaps in a specimen. In the specimen under investigation, this pinching behavior is a result of the yielding of the threaded rods. As the rods yield, there is a permanent deformation imposed in them. This results in a gap forming between the threaded rod nuts and the lug. As the load is released and then applied in the opposite direction, this gap needs to close before resistance is provided.

Although there seems to be a common belief that pinching behavior is an indication of subpar performance of a specimen, Effects of Strength and Stiffness Degradation on Seismic Response (FEMA P440A) (Federal Emergency Management Agency, 2009) indicates that this is not the case for moderate and long-period systems. The studies referenced in this paper indicate that pinching has only a small effect on peak displacement demands as long as post-yield stiffness remains positive. Specifically, it states "This observation is particularly interesting because it is contrary to the widespread notion that structures with elasto-plastic or bilinear behavior exhibit better performance than structures with pinching behavior because of the presence of additional hysteretic energy dissipation capacity." As moment-framed systems typically are not considered short-period systems, the pinching behavior should be of minimal concern.

As a point of comparison, Figures 5.23 and 5.24 show typical hysteresis loops for a reduced beam section moment connection and a Simpson Strong-Tie® Strong Frame® moment connection respectively. Figure 5.23 is an excerpt from Experimental Investigation of Dogbone Moment Connections (Engelhardt, Winneberger, Zekany, and Potyraj, 1998) while Figure 5.24 is from the Simpson website blog (Strongtie, n.d.). From these figures it can be seen that there are different overall shapes of hysteresis loops for prequalified moment connections. It can also be seen that the proposed YTR moment connection hysteresis loop more closely resembles that of the Simpson Strong-Tie® Strong Frame® moment connection.

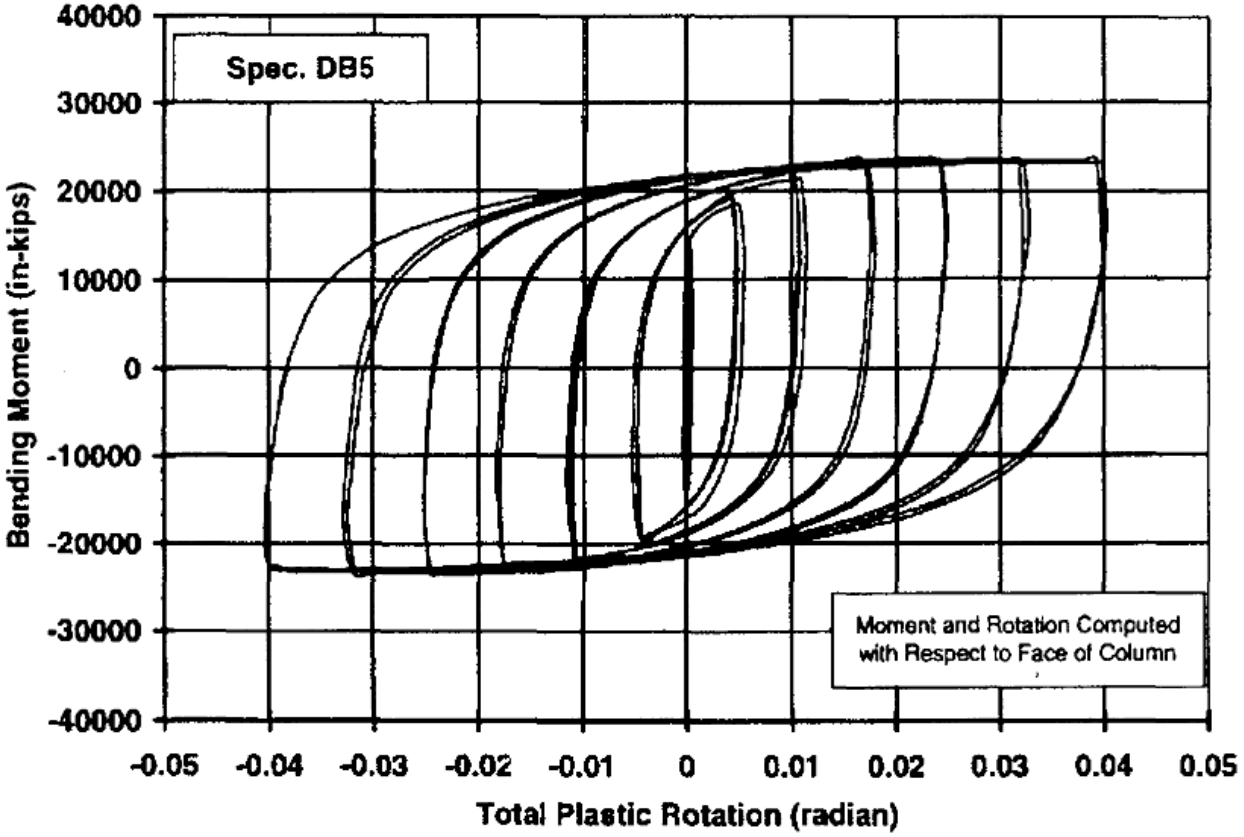

Figure 5.23 – Reduced Beam Section Moment Connection Hysteresis Loop

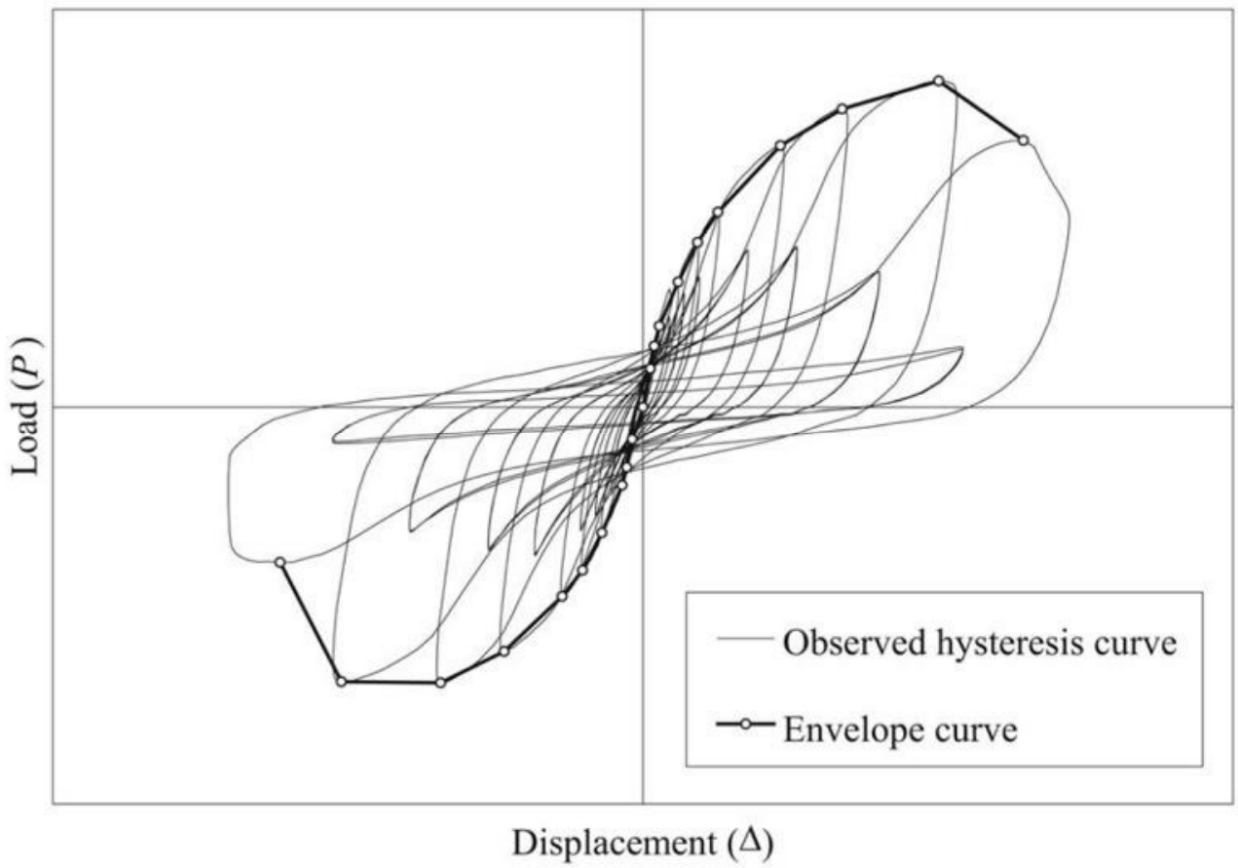

Figure 5.24 – Simpson Strong-Tie® Strong Frame® Moment Connection Hysteresis Loop

Second, it can be seen in Figure 5.22 that the maximum moment achieved was roughly 150 k-ft. From the calculations above, the yield strength of the four threaded rods is equal to 132.3k. With a moment arm of 10.72”, a yield moment of roughly 118 k-ft was expected. However, from the threaded rod tension tests discussed above, it was noted that the yield strength of the treaded rods is roughly 25% higher than the specified yield strength. Therefore, the expected yield moment is roughly 148 k-ft. This is consistent with the maximum moment achieved.

Finally, there appears to be minimal degradation within the test specimen for resisting moment. This is apparent as the moment capacity of the test specimen does not decline until the last test cycle; well beyond the requirements for an IMF or SMF system. This is important since the 0.80M_p requirement of AISC 341-16 can be neglected when degradation is not present; this was discussed previously in Section 2.1.4.3. In lieu of the 0.80M_p requirement, an alternate recommendation will be discussed in Chapter 8.

Although it is believed that the 0.80M_p requirement need not be met, it is still important to review the behavior of the test specimen in relation to the plastic moment capacity of the beam. Eighty percent of the plastic moment of a W10x49 is:

$$0.80(50ksi)(60.4in.^3) = 2{,}416k - in.$$

The face of the column is 6.2” away from the column centerline. The face, then, is located 65.8” from the load application point. Therefore, with the maximum applied load of roughly 36 kips as shown in Figure 5.20, the applied moment at the face of the column is:

$$(36k)(65.8") = 2{,}369k - in.$$

This applied moment is roughly 78% of the beam plastic moment; very close to 80% of the beam plastic moment.

Another piece of data collected during the experiment was the force in each threaded rod as a result of the applied load. This data was collected through load cells located at the end of each threaded rod. This information can be seen in eight figures; Figures 5.25 through 5.28

show the load in each short and long top bar over time and load steps while Figures 5.29 through 5.32 show the load in each short and long bottom bar over time and load steps.

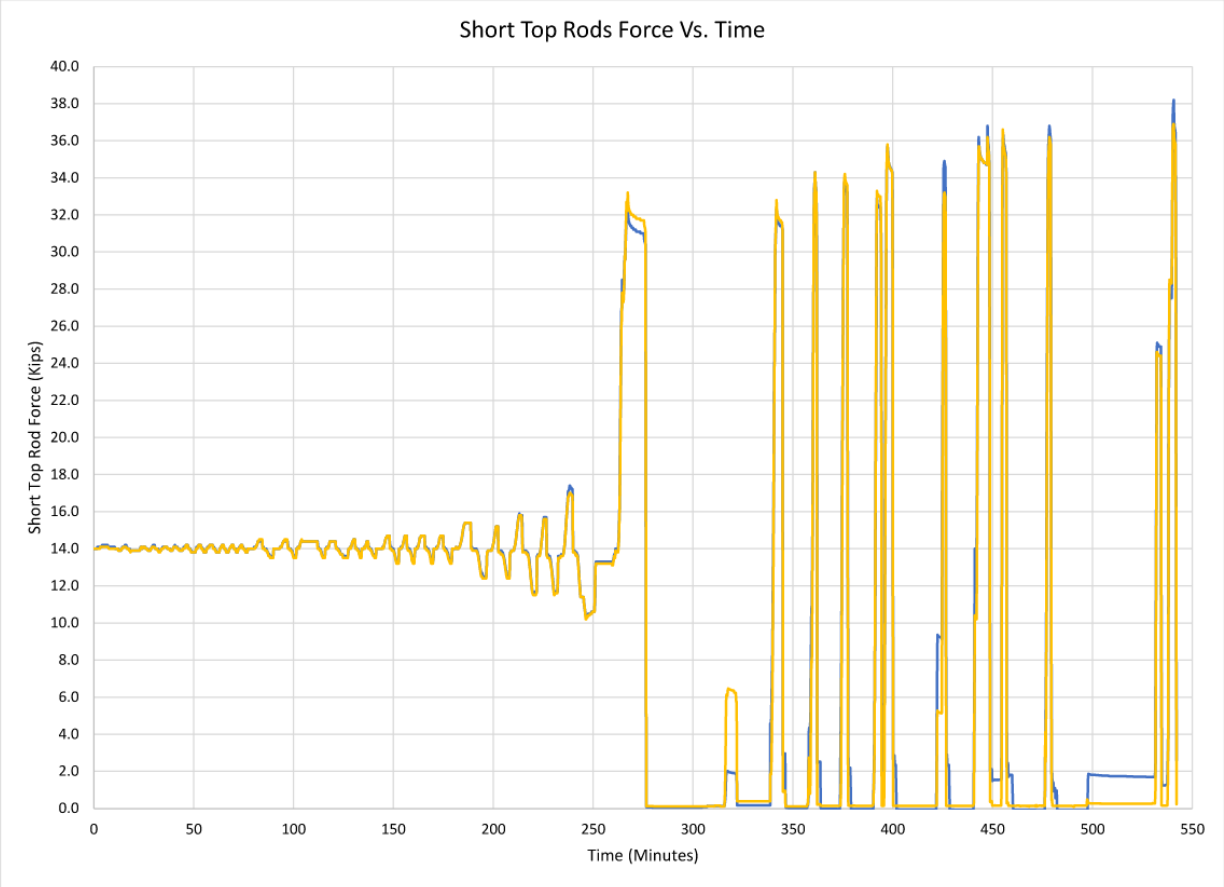

Figure 5.25 – Force in Short Top Rods Vs. Time

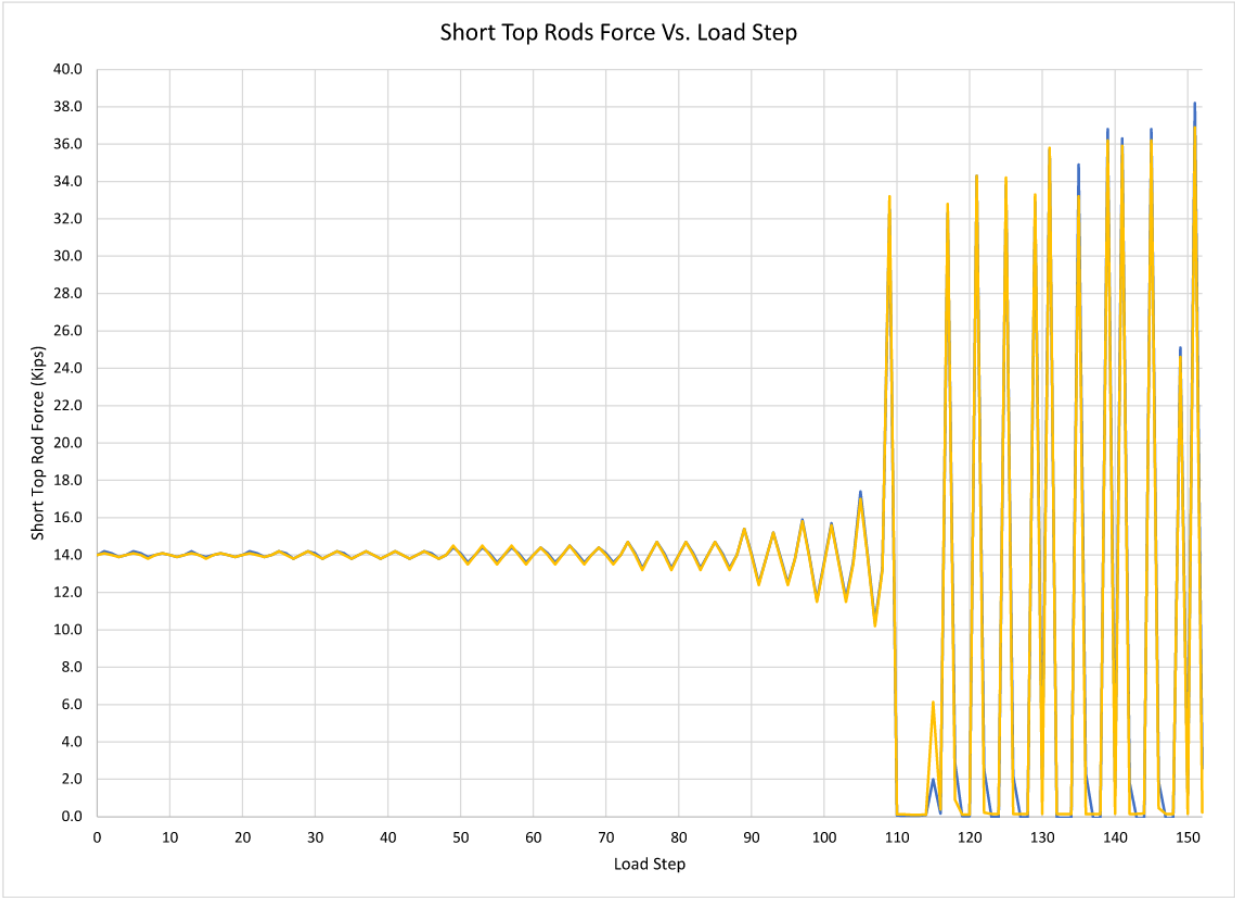

Figure 5.26 – Force in Short Top Rods Vs. Load Step

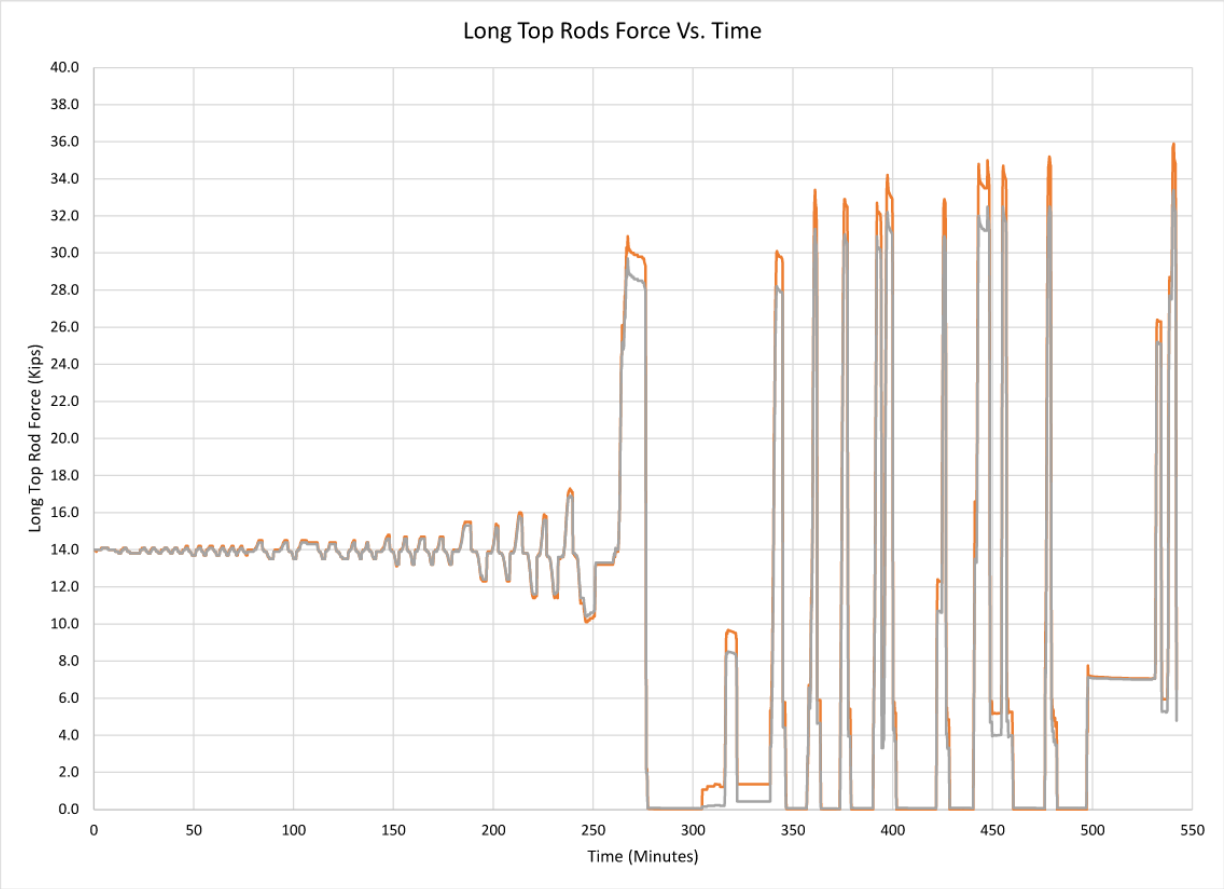

Figure 5.27 – Force in Long Top Rods Vs. Time

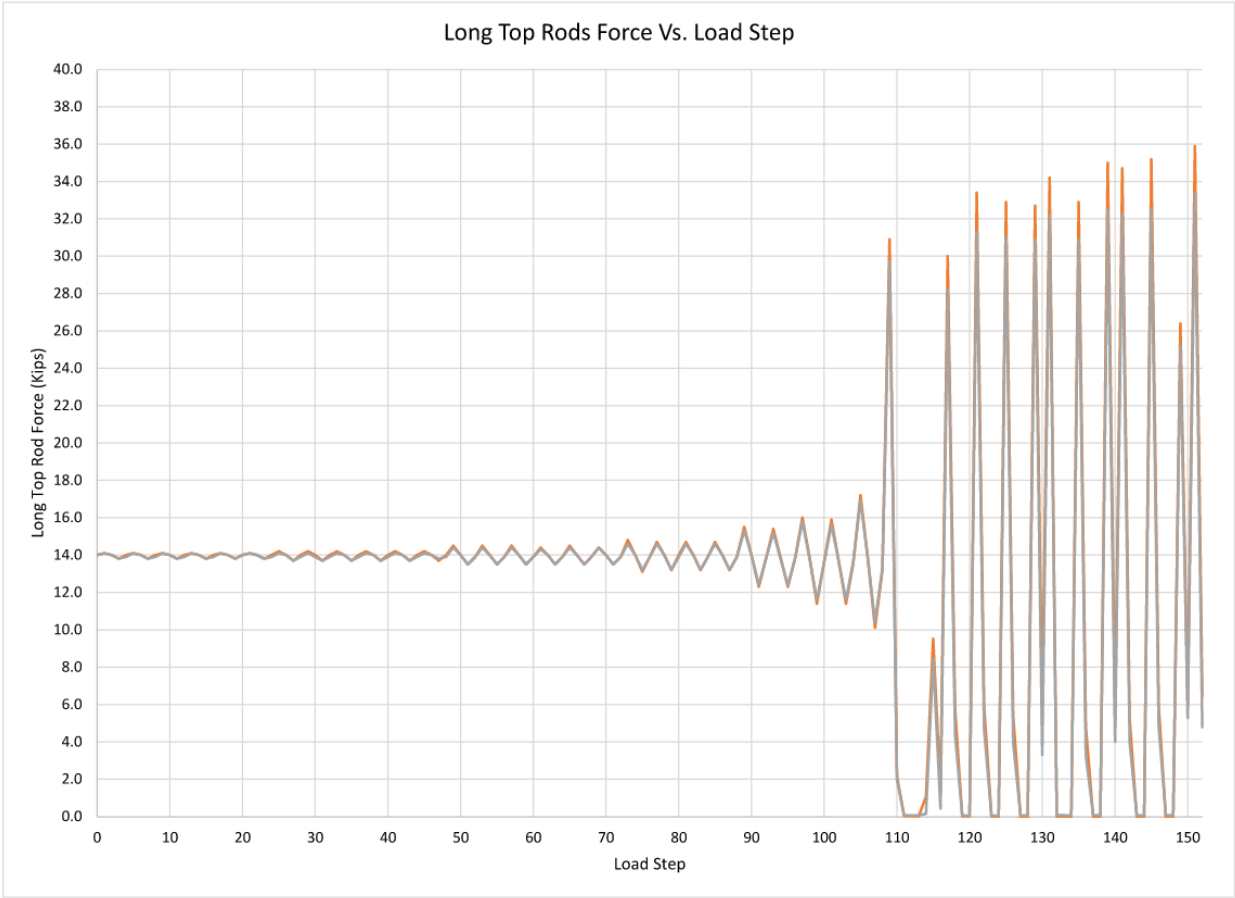

Figure 5.28 – Force in Long Top Rods Vs. Load Step

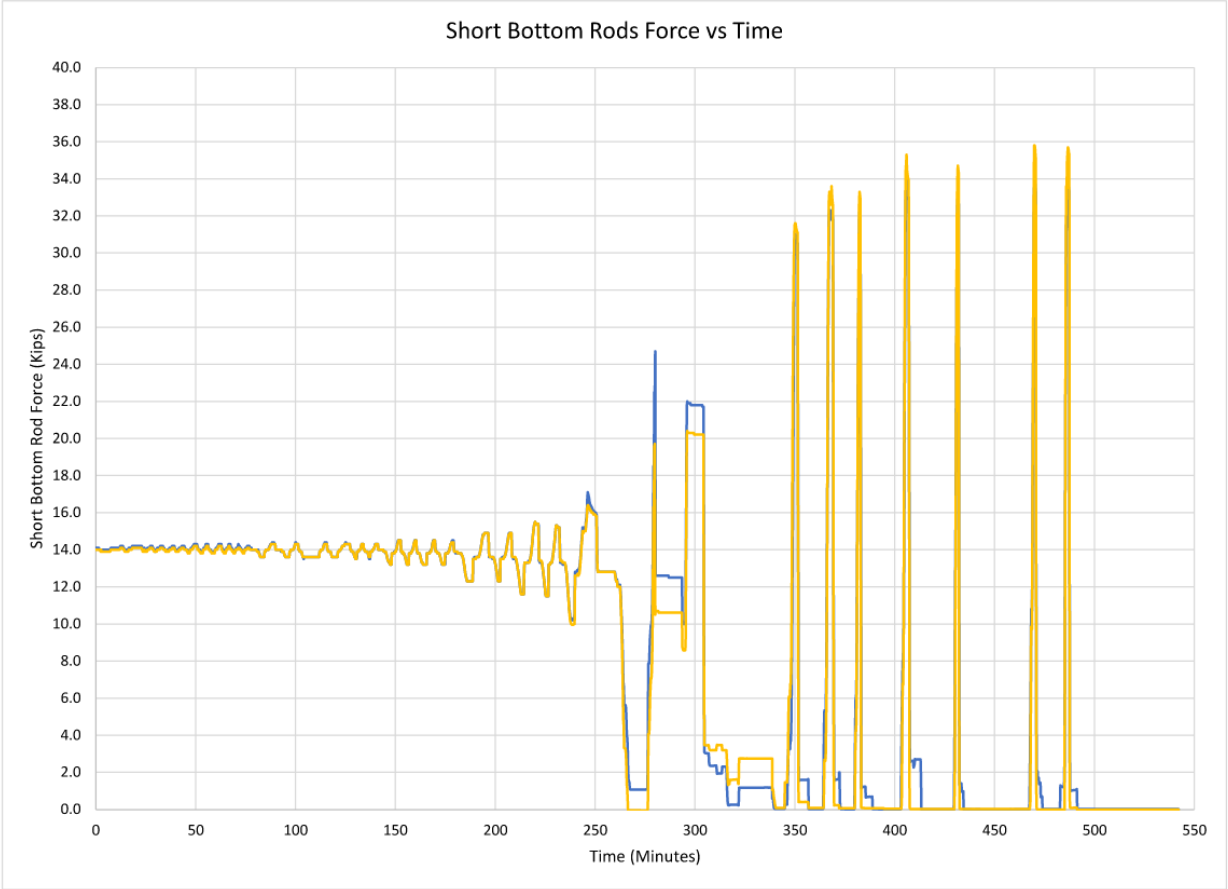

Figure 5.29 – Force in Short Bottom Rods Vs. Time

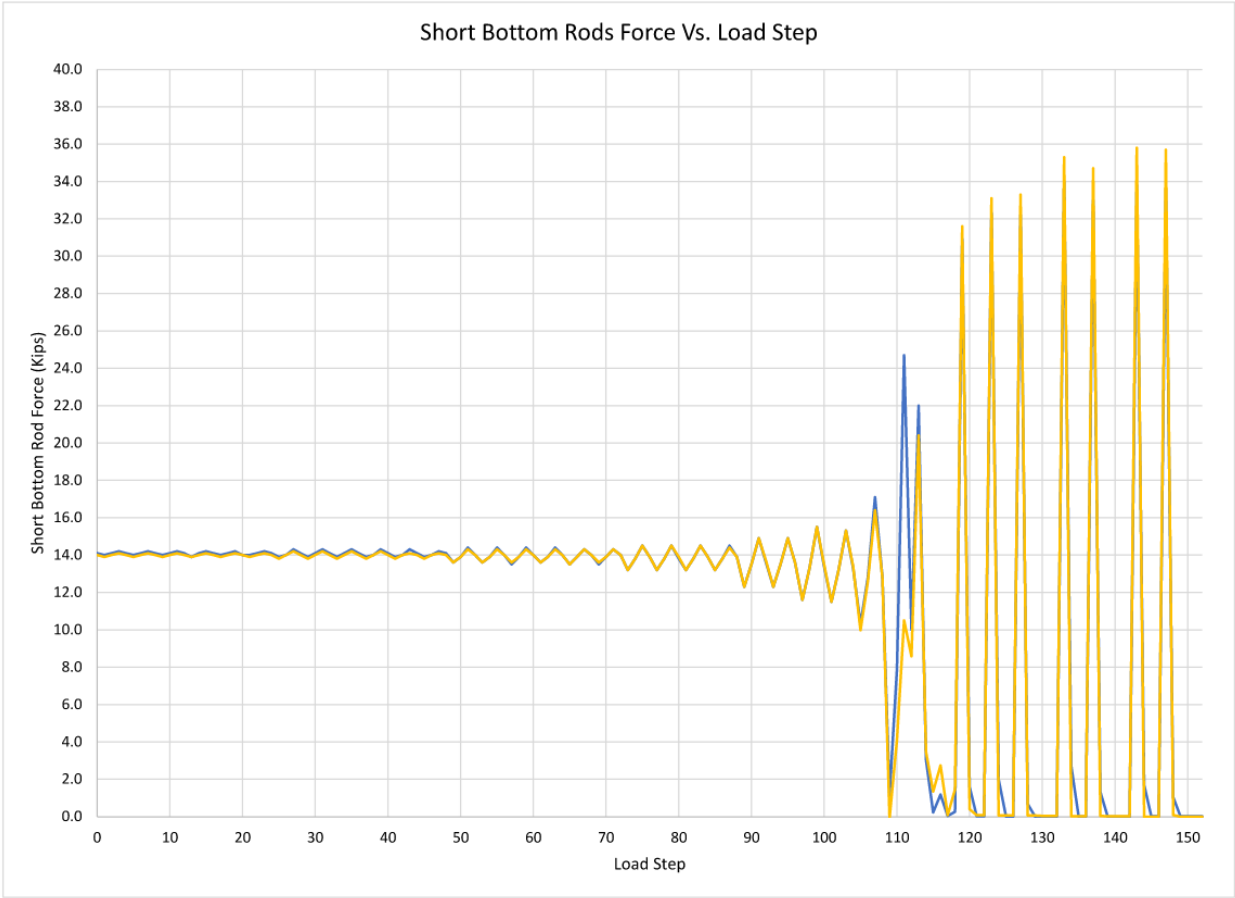

Figure 5.30 – Force in Short Bottom Rods Vs. Load Step

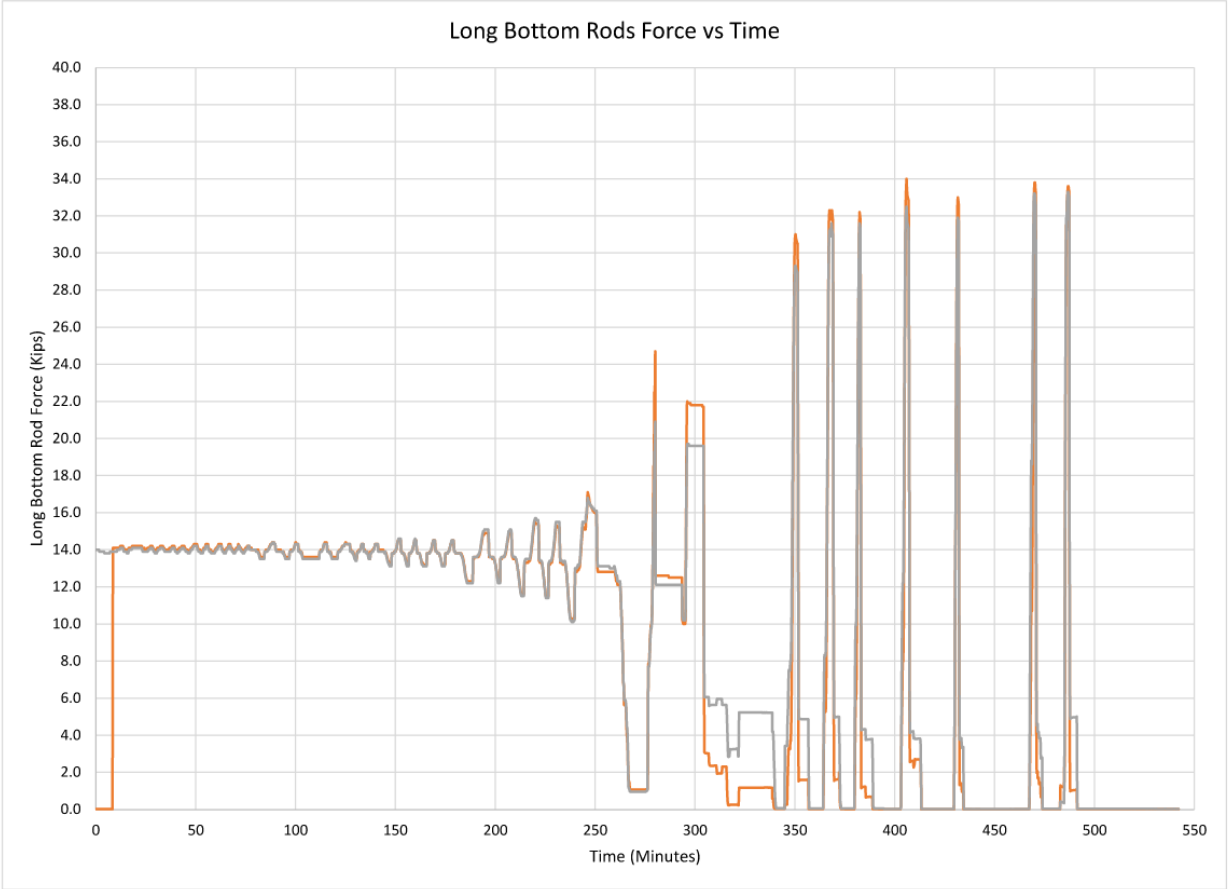

Figure 5.31 – Force in Long Bottom Rods Vs. Time

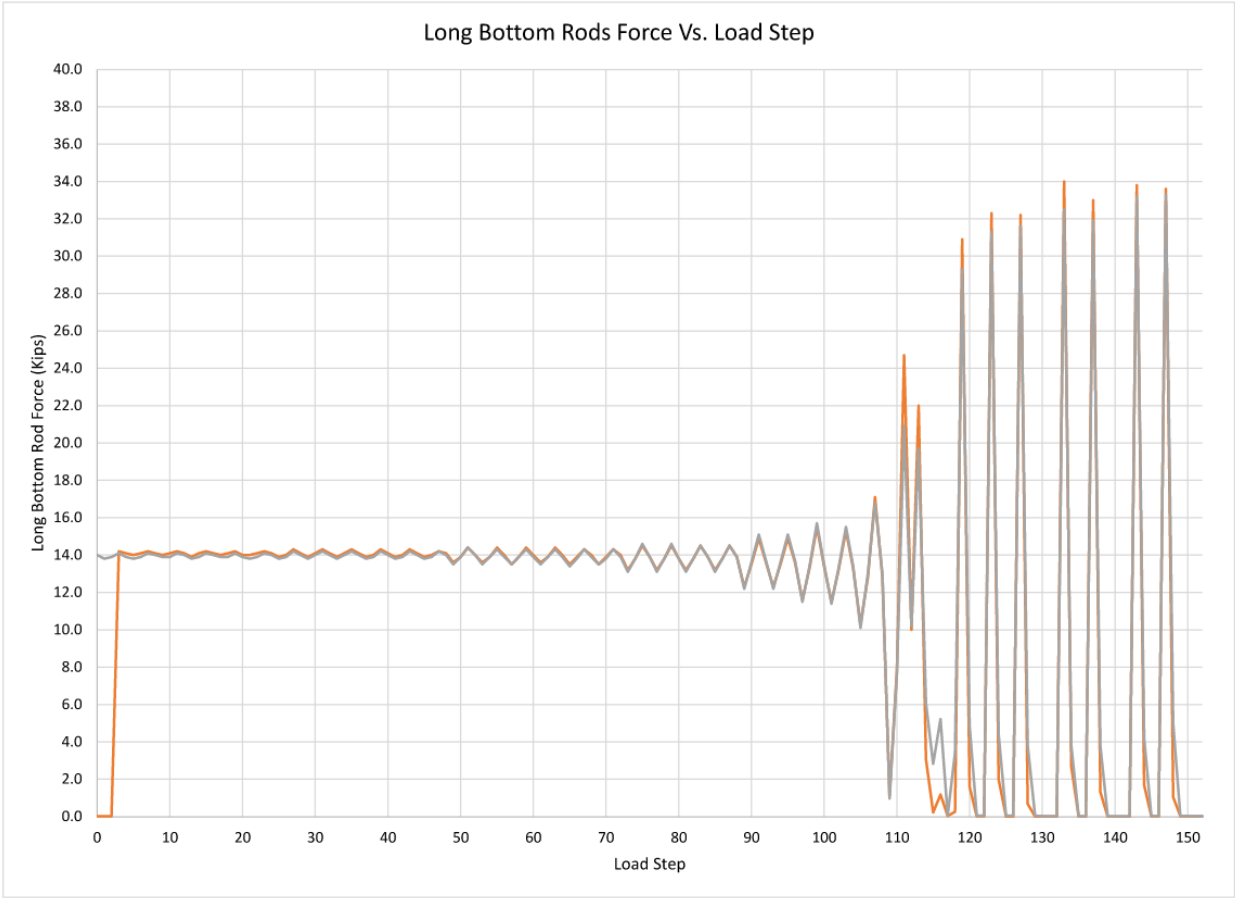

Figure 5.32 – Force in Long Bottom Rods Vs. Load Step

In each of these figures, the pretension load of 14 kips per threaded rod can easily be seen. As the applied load is increased, one can see the force in the threaded rods near the tension flange increase, while the force in the threaded rods near the compression flange decreases. The effect of the initial flexibility at the supports of test specimen can also be seen within these figures; this is apparent by the sudden increase in force seen in the figures. Once the pin supports were stiffened, a larger applied load was needed to impose the required displacement. This stiffening of the pin supports and subsequent increase in load, in turn, caused the web connection to slip on the next load cycle as discussed above. This can be seen

by the gap in loading over time (in the figures indicating time) as the specimen was inspected, repaired, and brought back up to load.

Another item to note within these figures is that the force in both the top and bottom short rods is slightly higher than that within the corresponding long rods. This is expected as the short rods were expected to yield first. As the yield strengths and cross-sectional areas are roughly equal between all of the threaded rods, it stands to reason that the short threaded rods would experience higher loading.

These figures also clearly show the yielding behavior of the threaded rods. As can be seen in the figures, once the threaded rods have reached their yield strength in tension, there is a flat-bottomed portion to the curves which indicates the threaded rods are resisting zero force. This flat-bottomed portion occurs over a finite length of time. This time represents two conditions; 1) where the threaded rod has already yielded but is currently on the compression side of the connection, and 2) where the applied load has reversed, but the threaded rod has yet to start resisting load due to the gap between the nut and lug plate resulting from the previous yielding of the threaded rod.

It can also be seen by comparing Figures 5.30 and 5.32 that the short threaded rods yielded prior to the long threaded rods. This outcome was expected as discussed previously due to the differing lengths of the threaded rods. The number of cycles between successive yielding in the differing length threaded rods could be increased by increasing the disparity between the different lengths of threaded rods. During the physical testing, it was also observed that the beam end would return to its initial position after the imposed displacement

was removed. This behavior was observed until after the threaded rods yielded during one of the 0.03 radians cycles. By increasing the disparity between the different lengths of the threaded rods, it is believed that this self-centering behavior would be extended further into the testing protocol.

One final piece of information that was obtained from the physical testing was the strain at certain locations within the specimen. Unfortunately, after reviewing the data, it was apparent that only one of the strain gages measuring this information was working correctly throughout the entirety of the test; this strain gage was located on the beam flange. This plot of beam flange strain versus time can be seen in Figure 5.33. Corresponding data that has been manually filtered to show maximum beam flange strains versus load cycle can be seen in Figure 5.34. From these figures, it can be seen that the beam flange appeared to remain elastic throughout the test, which was to be expected, with only minor yielding possible. In these figures, the two thick horizontal lines have been added to represent the yield strain of steel.

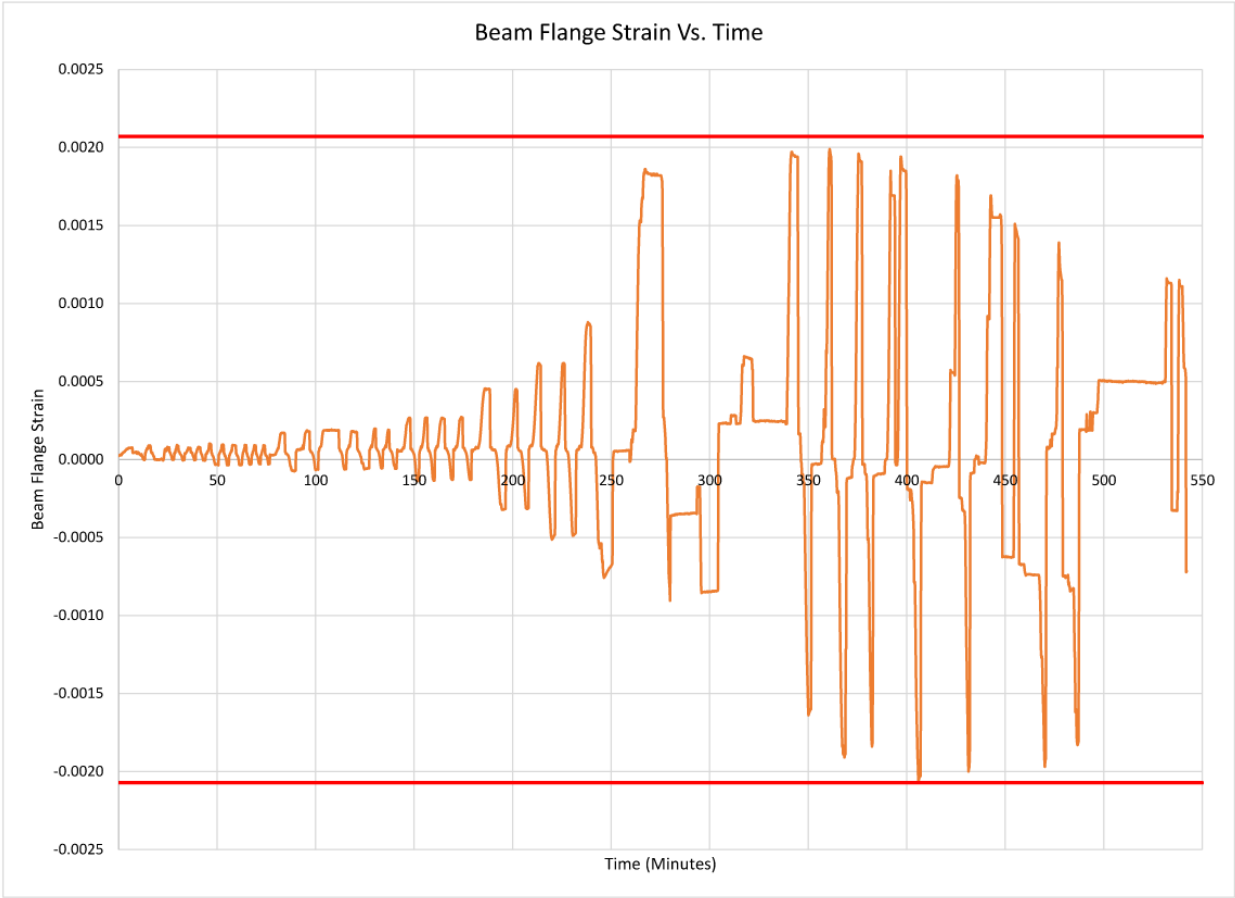

Figure 5.33 – Beam Flange Strain Vs. Time

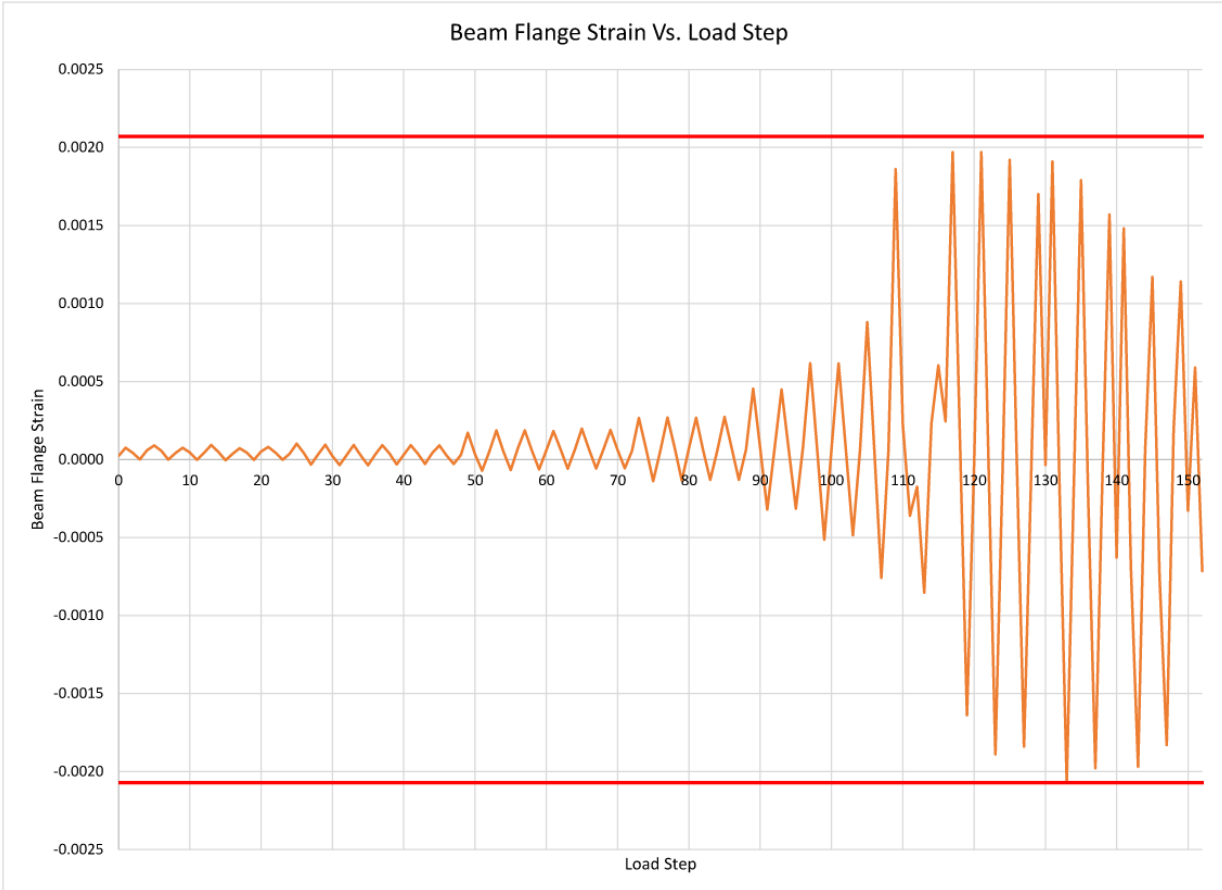

Figure 5.34 – Beam Flange Strain Vs. Load Step

Although not directly obtained from the data collected during the test due to the strain gages not working throughout the entirety of the test, the strain in the threaded rods can be approximated by the data that was collected. This information is important as it will reveal how far along the stress-strain curve the threaded rods were pushed. Figure 5.35 shows the parameters required to determine the approximate strain in the threaded rods.

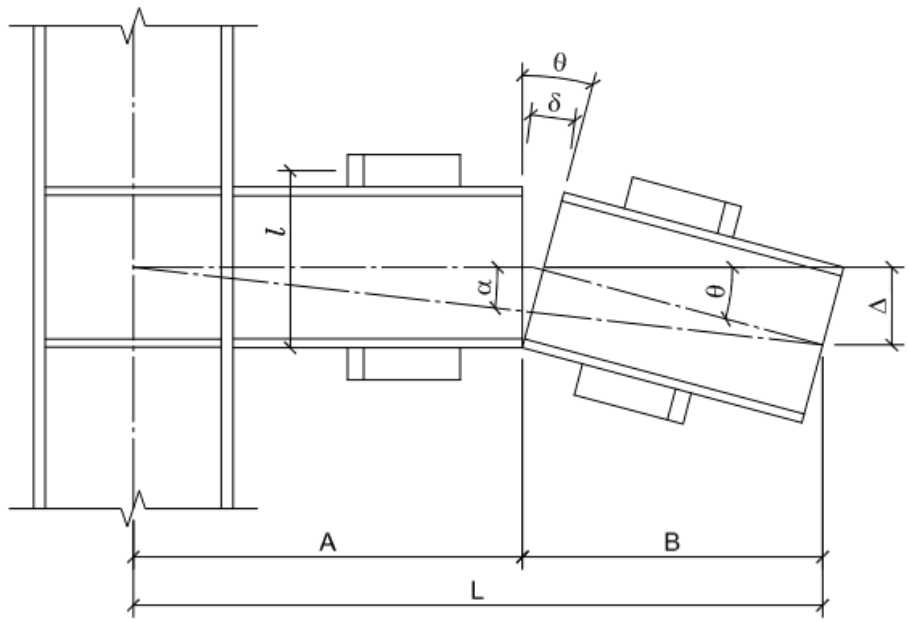

Figure 5.35 – Parameters for Determination of Approximate Strain in Threaded Rods

As shown in this figure, a conservative assumption is made where all the imposed rotation is accommodated by elongation in the threaded rods. With the geometry shown, the following derivation is made:

$\tan\alpha = \Delta/L$; therefore, $\Delta = L\tan\alpha$

$\tan\theta = \Delta/B$; by substitution, $\tan\theta = L(\tan\alpha)/B$; therefore, $\theta = \tan^{-1}[L(\tan\alpha)/B]$

$\tan(\theta/2) = (\delta/2)/l$; therefore, $\delta = 2l\tan(\theta/2)$

For the test specimen, $\alpha_{max.}$ = 0.066 radians as noted in Section 5.2.1. Also, l = 11" and *A* = 24.2" for the layout of the test specimen as determined in Section 4.2.2 and *L* = 79.75" as noted in Section 4.2.2.1. The variable, *B*, then is equal to 55.55". With this information, θ= 0.095 radians and δ = 1.04". With strain, ε, equal to δ divided by the length of the threaded

rods, ε = 0.048 for the short threaded rods (with an initial length of 21.75”) and ε = 0.031 for the long threaded rods (with an initial length of 33.75”). Comparing these strains to the stress – strain curves shown in Figure 5.5 for the threaded rod test specimens reveals that the threaded rods were experiencing strains within the initial stages of strain hardening. If the strain for the threaded rods were to be limited to 0.15 (an estimate based on Figure 5.5), and the equations above were worked in the reverse order, it can be estimated that a story drift of 0.21 radians could be achieved before fracture of the short threaded rods would occur. This level of story drift is unrealistically high which would indicate that any realistic story drifts which were to occur could be accommodated by the YTR moment connection prior to threaded rod fracture.

CHAPTER 6

FINITE ELEMENT ANALYSIS

6.1. Finite Element Model Objectives

A finite element model of the test specimen was generated with the objective of creating an analytical model which could accurately predict the physical behavior of the test specimen. If successful, the finite element model could be used to investigate portions of the specimen not fully captured during the physical testing. Also, any future work could continue to use the finite element model as opposed to replicating the physical testing.

6.2. Finite Element Model

The finite element model of the test specimen was created using the computer program SAP2000 (version 22) (Computers and Structures, 2017). SAP2000 is a commercially available structural analysis program produced by Computers & Structures, Inc. This program allows the user to utilize shell elements to approximate the behavior of thin-membered elements. These shell elements were used to model the webs, flanges, and plate elements of the test specimen. The finite element analysis model created can be seen in Figure 6.1. The additional features used within SAP2000 to create the finite element analysis model are discussed in more detail below.

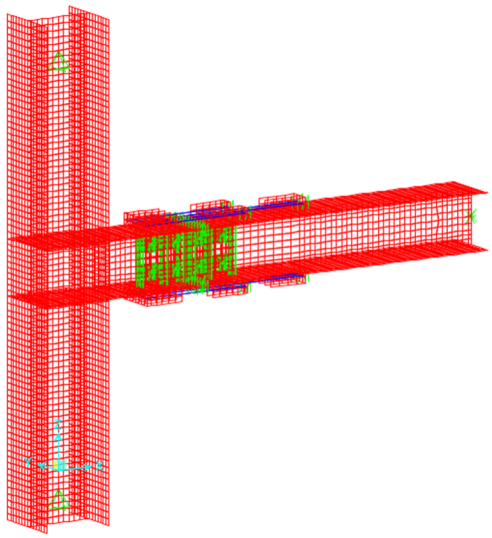

Figure 6.1 – Finite Element Model

The threaded rods (used at the connection) were modeled using standard frame elements. Frame elements resist shears, tension, compression, bending, and torsion. However, since the threaded rods are intended to resist tension only in the YTR moment connection, an additional element was added to the model to facilitate the tension-only behavior of the threaded rods. This additional element, a short link element, was added in line with the threaded rod frame element between the end of the threaded rod frame element and the lug shell elements. In addition to the tension-only behavior, this link element also captures the nonlinear behavior of the threaded rods. The link element was chosen to capture the nonlinear behavior of the threaded rods as, after investigating SAP2000's capabilities, it was determined that the link would more easily and accurately capture this behavior.

There are currently ten types of link elements available within the SAP2000 program per the CSi Analysis Reference Manual (Computers and Structures, 2017), each offering different options to the user. The type chosen for this project was the "Multi-Linear Plastic" type. This

type of link element provides nonlinear behavior and dissipates energy according to several hysteresis models available within the program. There are currently seven types of hysteresis models available with the SAP2000 program. For this project, the hysteresis typed used with the link was the "Takeda" type. Per Reinforced Concrete Response to Simulated Earthquakes (Takeda, Sozen, and Nielsen, 1970), this hysteresis model was originally developed to accurately predict the dynamic response of reinforced concrete systems. One of the main items within this model that allows it to accurately predict the behavior of reinforced concrete is its ability to capture gapping tension, which, in the case of reinforced concrete, represents concrete cracking. This ability to capture gapping tension is critical to this project as, once the threaded rods yield, a gap forms between the nut and lug. Therefore, using a hysteresis model which accounts for this gap is essential.

In order to accurately model the behavior of the threaded rods with the link element described above, a force versus displacement curve must be input into the SAP2000 program. As the short threaded rods and long threaded rods experience different force versus displacement, two separate link element types are used with the appropriate force versus displacement curves input into the SAP2000 program. These force versus displacement curves can be seen in Figure 6.2. These force versus displacement curves are based on the average of the stress versus strain curves obtained from the tested threaded rod specimens. It should also be noted that the pretension in the threaded rods was achieved by applying a frame strain load in the individual threaded rod frame members.

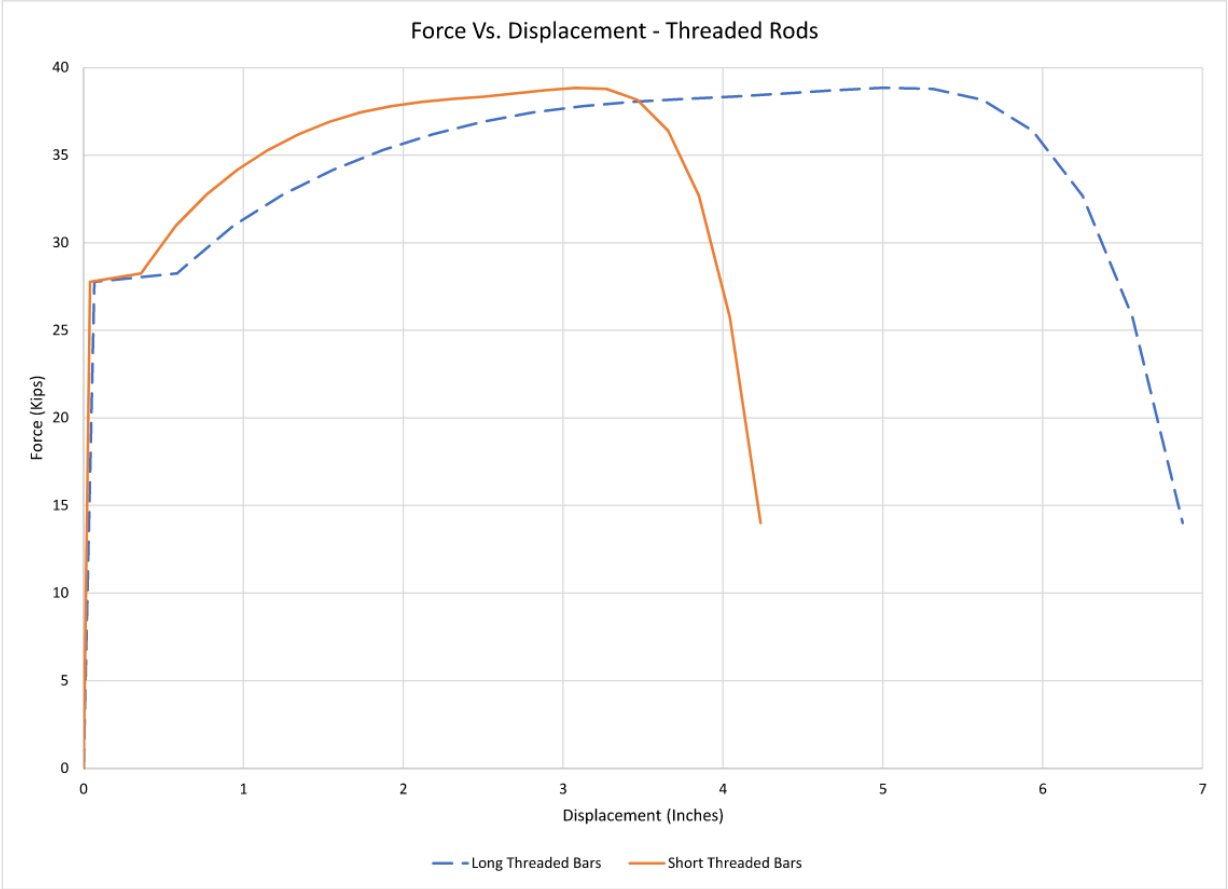

Figure 6.2 – Threaded Rod Force Vs. Displacement

The finite element analysis model utilized infinitely rigid pinned supports (at connections to the strong floor of the laboratory) that replicates the idealized intended system. However, the experiment indicated that there was flexibility at the support points of the test specimen early in the test. This was corrected midway through the physical testing.

The bolting of the web plates within the finite element analysis model would not model friction and slip. Accurately depicting the movement of the bolts within a long-slotted hole is an extremely difficult task to be accomplished within a finite element analysis model, especially considering that both finger-tight and snug-tight applications were used during physical testing.

Therefore, a simplified approach was taken to model the bolts and their interaction with the beam web and plates. Nodes were placed at the center of the bolt hole in the beam web element and both web plate elements. These three nodes are bound together utilizing joint constraints which tie the nodes together perpendicular to the web/plates; this prevents the web plate elements from separating from or crossing into the splice plate elements (replicating tension in the bolts or bearing between the web and plate material). Then compression only links are placed between the joints that align vertically as well as horizontally with this center node. The compression only links utilize a gap element which allows the joints to move relative to each other until the gap is closed. This arrangement is shown in Figure 6.3. All other nodes in the web plates are connected to the beam web nodes with compression only links which simulate the bearing-only condition which exists between the beam web and web plates.

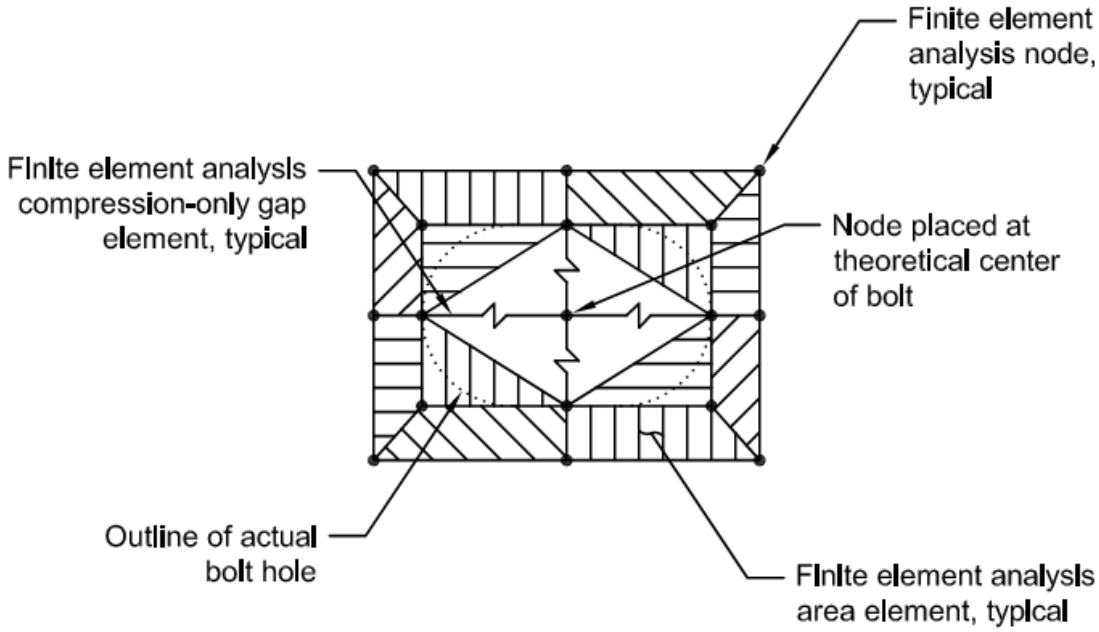

Figure 6.3 – Modeling of Bolted Elements

A time-history analysis was then utilized to replicate the imposed displacement protocol used during the physical testing. Due to the nonlinear behavior of the model, an iterative process was used to determine the loadings required to achieve the specified displacements. The rate of loading utilized in this time-history analysis was quicker and more consistent than what was used in the actual physical testing of the specimen. For the finite element analysis, the time-history input function was set up to apply the load steps in one-second intervals. The load versus load step plot used in the analysis can be seen in Figure 6.4. The program was then set to analyze the model every 1/100 of a second. This was done to ensure that SAP2000 was able to accurately capture the nonlinearity of the links used. It was found that if a less refined analysis step were used, the model would not converge. Conversely, if a more refined analysis step were used, the computing time would increase dramatically.

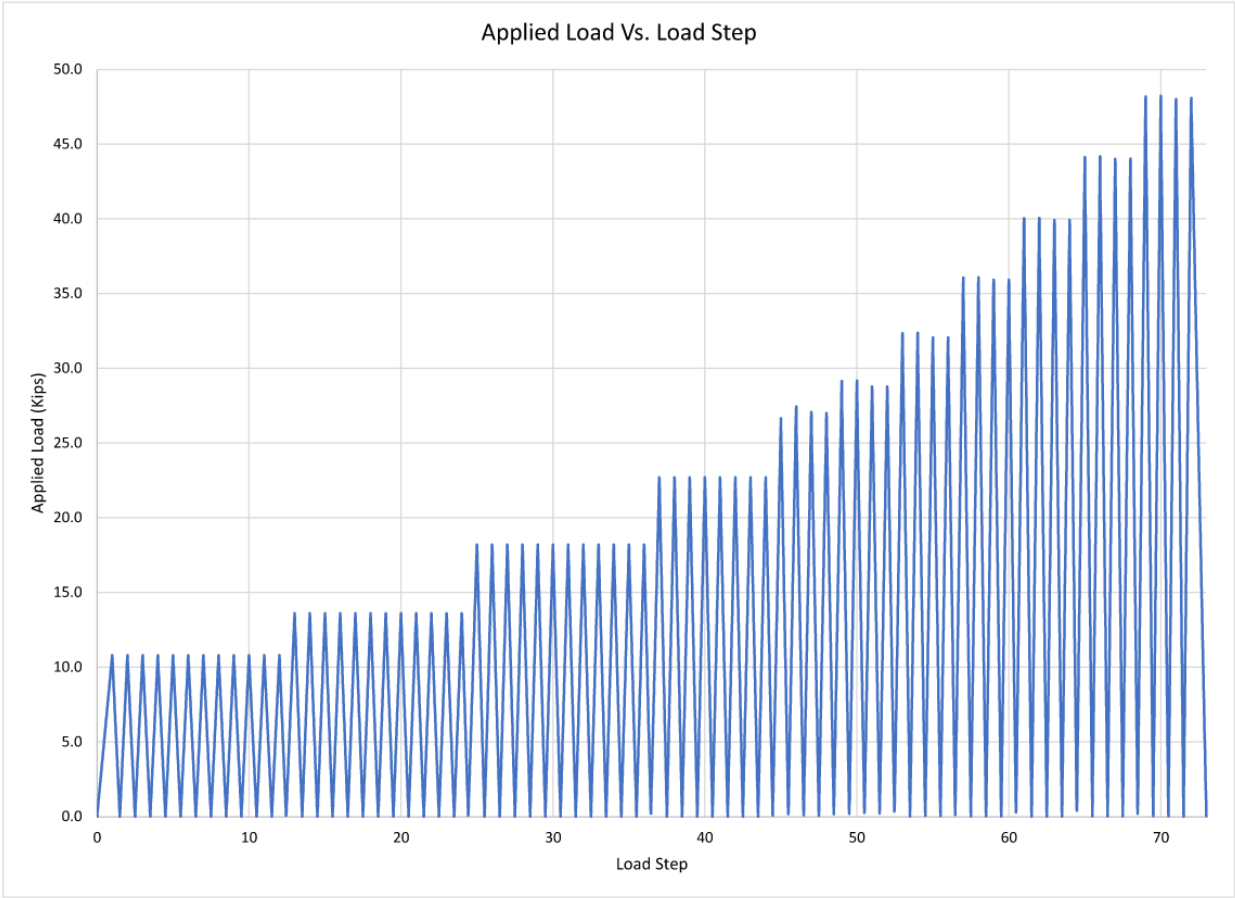

Figure 6.4 – Applied Load Vs. Load Step Used in FEA Analysis Model

6.3. Finite Element Analysis Model Results

Results of the finite element analysis model were similar to those obtained from physical testing. Figure 6.5 shows the plot of deflection versus load step. The deflections achieved during the finite element analysis are also summarized in Table 6.1 below. Two items should be noted which can be clearly seen in Table 6.1. First, the specified displacement is different than what was used for the physical testing protocol (refer to Table 4.1). This is because the displacement for the finite element analysis model is measured at exactly six feet from the centerline of the column as opposed to the location of the LVDT mentioned earlier for

the physical testing. Second, although these results are obtained from a computer analysis, there is still some variation in the resulting displacements. This is because the computer analysis is force-controlled as opposed to displacement-controlled. As noted above, the applied forces were adjusted through an iterative process to result in displacements close to the specified displacements. Upon yielding of the threaded rods, this force-controlled nature of the analysis model resulted in variation as it was impractical to continually adjust the force applied to an unrealistic precision.

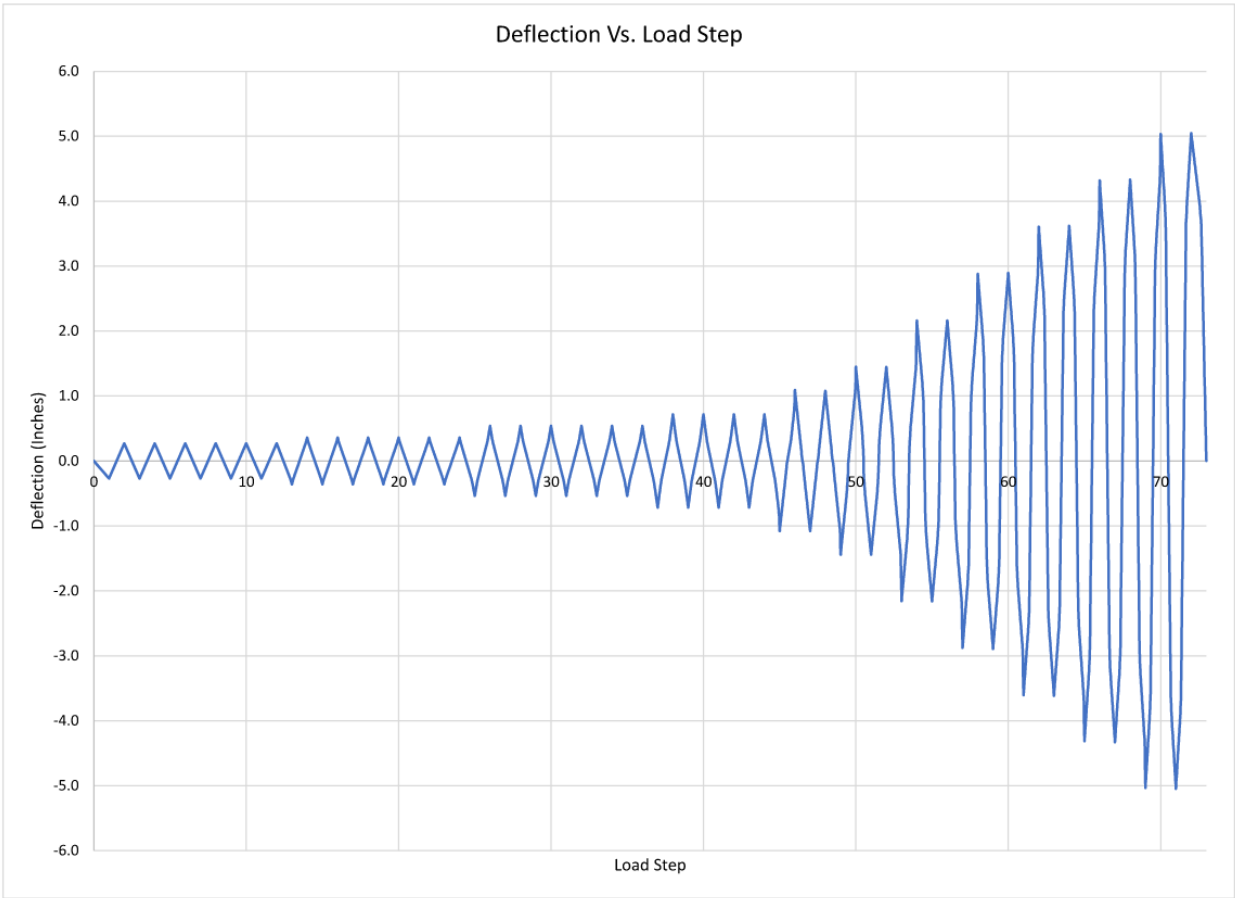

Figure 6.5 – Finite Element Analysis Deflection Vs. Load Step

Test Step	Target Rotation (radians)	Specified Displacement (*In.*)	Resulting Displacement (*In.*)	Average Resulting Displacement (*In.*)
1	0.00375	0.270	0.270	0.270
2	0.005	0.360	0.360 – 0.361	0.361
3	0.0075	0.540	0.538	0.538
4	0.01	0.720	0.717	0.717
5	0.015	1.080	1.077 – 1.080	1.079
6	0.02	1.440	1.435 – 1.444	1.440
7	0.03	2.161	2.158 – 2.162	2.160
8	0.04	2.882	2.877 – 2.894	2.889
9	0.05	3.603	3.608 – 3.619	3.614
10	0.06	4.325	4.317 – 4.333	4.325
11	0.07	5.048	5.033 – 5.048	5.041

Table 6.1 – Finite Element Analysis Deflections

The second set of data which was obtained from the finite element analysis results is rotation versus load step of the model; this can be seen in Figure 6.6. The rotation of the model is determined by taking the inverse tangent of the length divided by the deflection. For the finite element analysis model, the length from the centerline of the column to the point of load application is 72 inches.

With the load at each step determined, the moment at the splice can be determined by multiplying the load by 47.8 inches. This is the distance from the applied load to the splice location. This then, can be compared to the rotation in a moment versus rotation plot. This can be seen in Figure 6.7.

An additional piece of information found from the finite element analysis is the load in the threaded rods versus load step. As the finite element model is symmetric in its loading and boundary conditions, it is sufficient to review the top rods only as the bottom rods will have an equal and opposing load versus load step plot. The top rod load versus load step plot can be

seen in Figure 6.8. In this figure, the thick horizontal line represents the yield strength of the threaded rods.

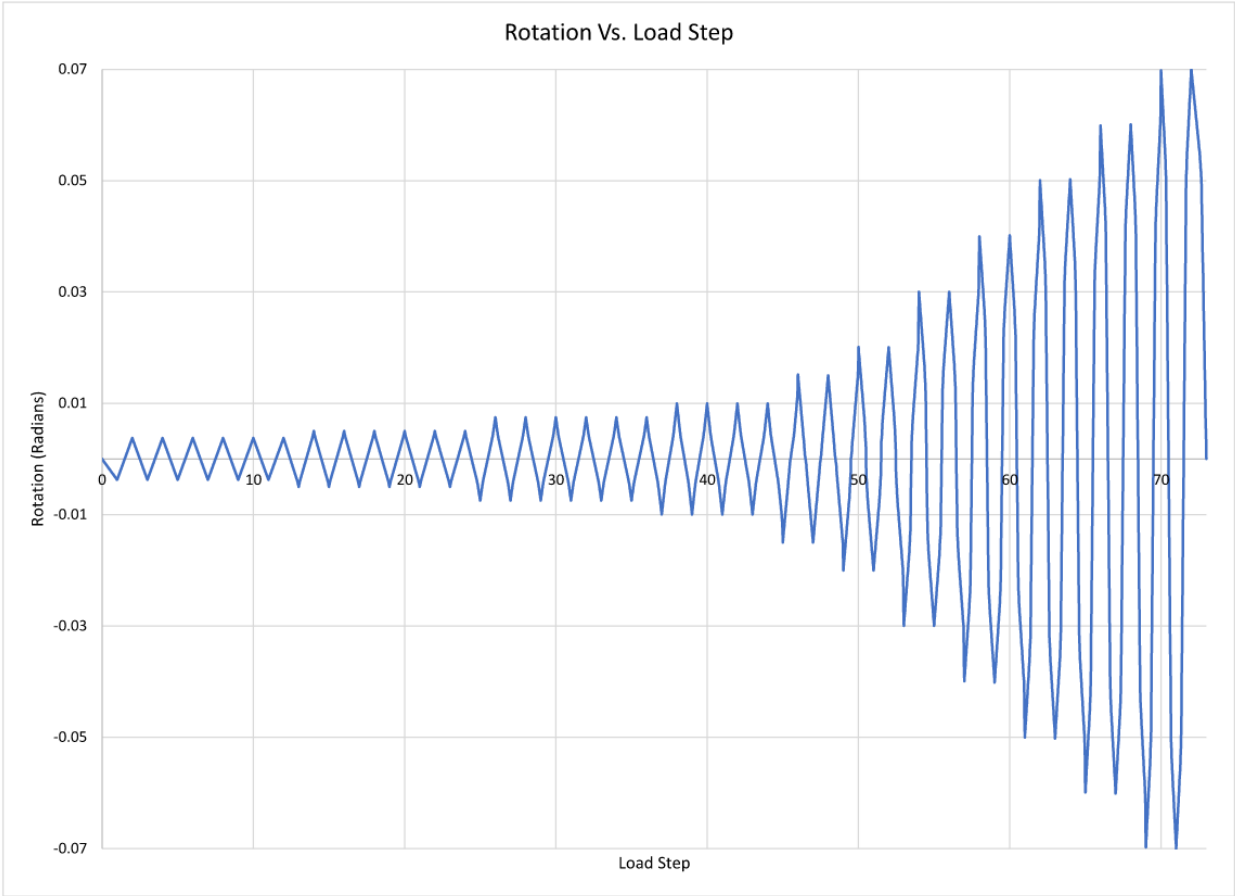

Figure 6.6 – Finite Element Analysis Rotation Vs. Load Step

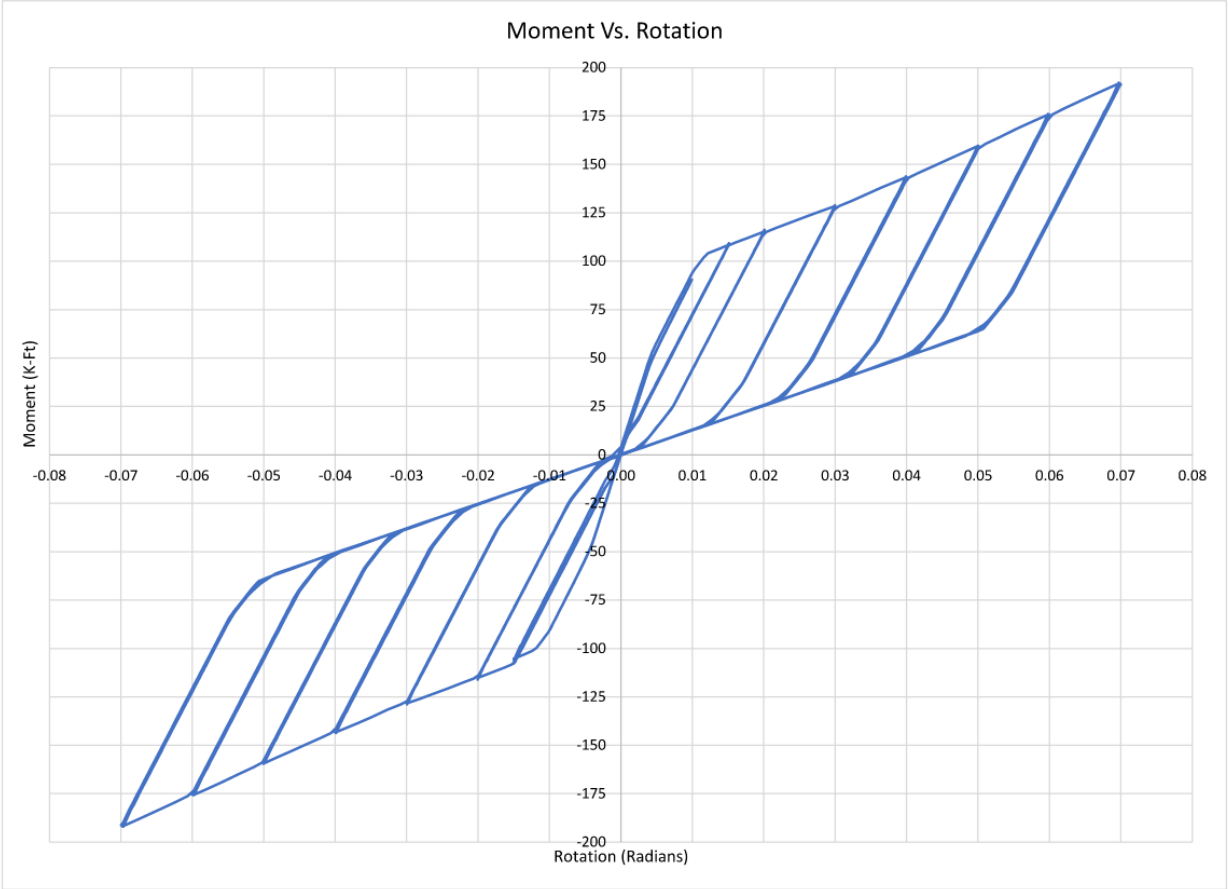

Figure 6.7 – Finite Element Analysis Moment Vs. Rotation

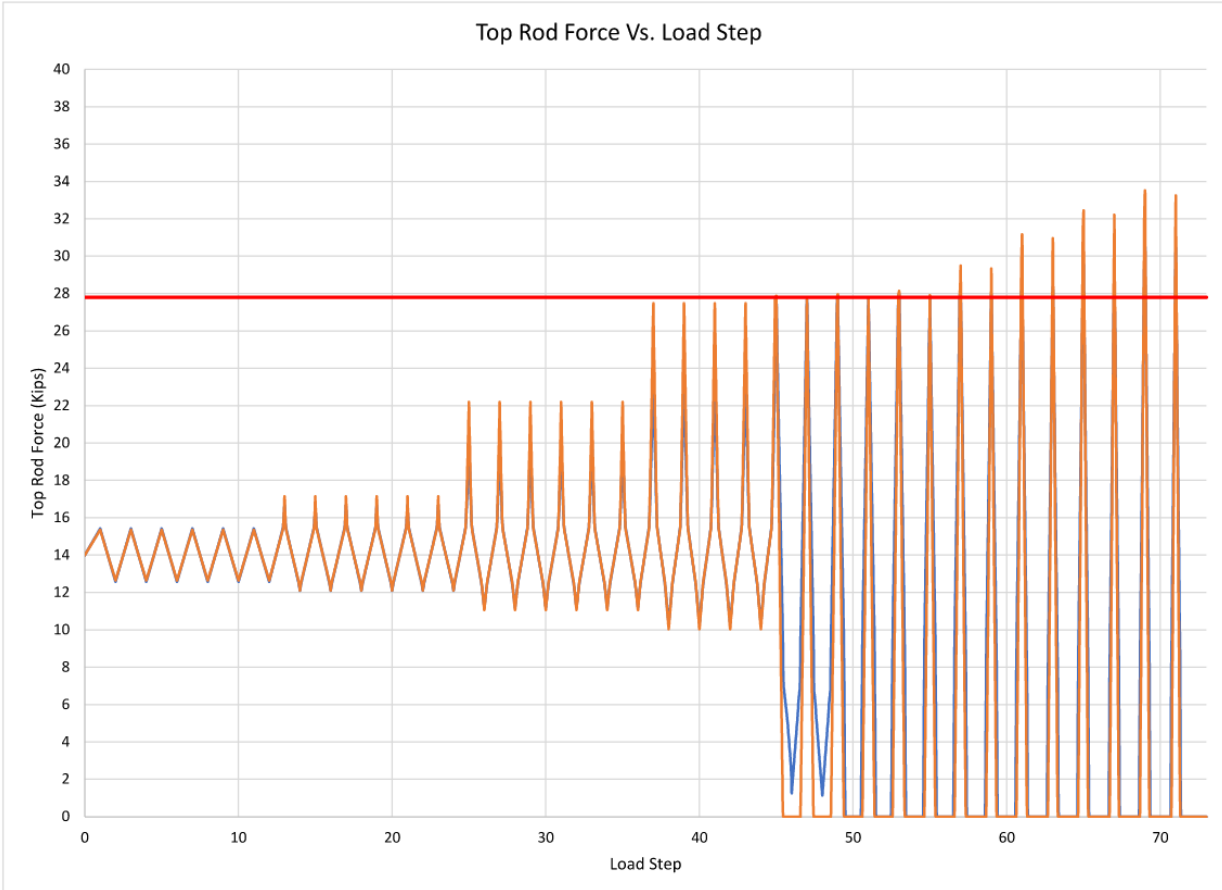

Figure 6.8 – Finite Element Analysis Threaded Rod Load Vs. Load Step

CHAPTER 7

COMPARISON OF RESULTS

7.1. Comparison of Physical Testing Results and Finite Element Analysis Results

Although physical testing is important, it would be almost impossible to test a sufficient number of specimens to fully understand the YTR moment connection. Likewise, although analytical models are important, their accuracy cannot be verified without a physical basis for comparison. Therefore, it is of utmost importance to compare the results from the physical testing with those obtained from the finite element analysis model. If the agreement between the two is close enough, future physical testing can be minimized while emphasis can be placed on the more cost-effective finite element analysis models. Therefore, the results discussed above will now be compared below.

The first items discussed in the physical testing results were deflection versus time and rotation versus time. This served as the basis for the time-history analysis of the finite element analysis model and therefore do not need to be compared as one is based on the other. Therefore, the first item to compare is load versus load step. This comparison can be seen in Figure 7.1.

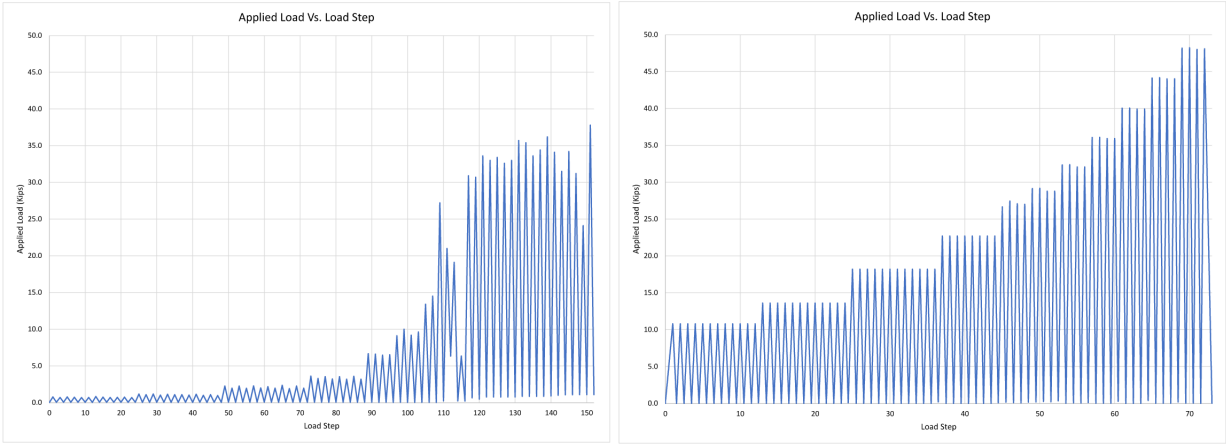

Figure 7.1 – Load Vs. Load Step Comparison

There are several items that can be taken away from this comparison. First, the applied load in the finite element analysis can be seen as being more uniform than the physical testing. This difference in uniformity is believed to have no impact on the results and can therefore be ignored. Second, the applied load in the finite element analysis model was higher during the initial cycles than in physical testing. It is believed that this is due to the differences in support stiffness between the analytical model and the physical model. As discussed above, the physical model had some inherent support flexibility within the testing setup in the initial cycles of the testing regimen. Once this was corrected, the applied loading increased dramatically. As these initial loadings did not yield any portion of the specimen, it is believed that this difference can be neglected. Finally, it can be seen that higher applied load was used during the last cycles in the finite element analysis than in the physical testing. The reasoning behind this discrepancy will be addressed below in the comparison between the moment versus rotation figures.

The second item to compare is moment versus rotation. This can be seen in Figure 7.2. The moment versus rotation plots is the main way to visualize the behavior of the connection. Therefore, a careful examination of the comparison between the physical model and finite element model must be made. To help in the comparison, an overlay of the physical model and analytical model results can be seen in Figure 7.3.

The main takeaway from this comparison is that the overall shape and magnitude of the moment versus rotation plots is consistent between the physical test and finite element model. This suggests that the finite element model replicates the behavior of the physical test.

Also as seen in these figures, the finite element model has several characteristics that differ from the physical model. First, it can be readily seen that the maximum moment achieved is higher in the finite element model than that from the physical model. This would be expected, as per Figure 7.1, the finite element model required a higher applied loading (and thus higher moment) to achieve the targeted rotations. Second, and more importantly, the moment versus rotation plot for the finite element model only has a magnitude of zero moment at a rotation of zero radians. This is a significant difference from what is seen in moment versus rotation plot obtained from the physical test and would seem to indicate that the nonlinearity of the threaded rods is not being captured. However, per Figure 6.8, it is clear that the threaded rods yield within the analytic model. Therefore, further investigation into this discrepancy is warranted and is discussed in the following paragraphs.

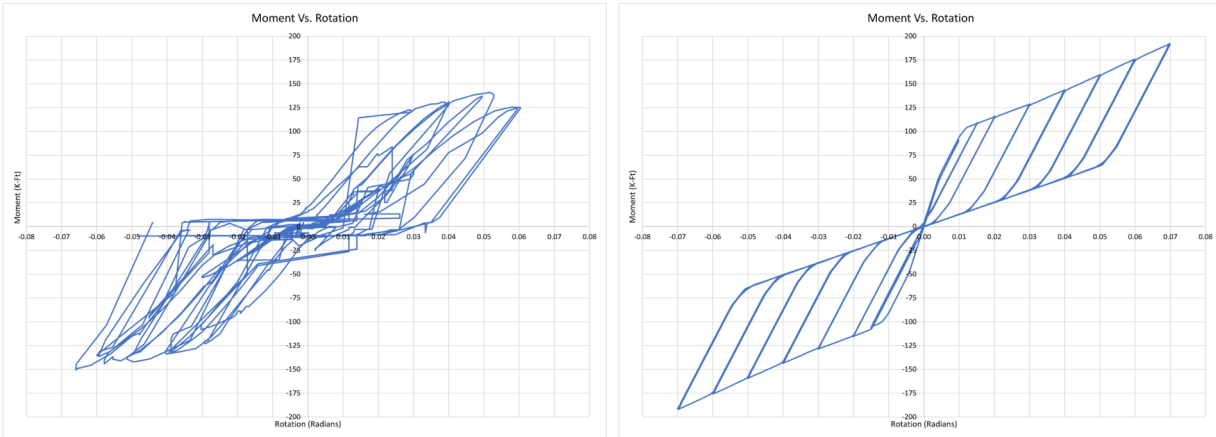

Figure 7.2 – Moment Vs. Rotation Comparison

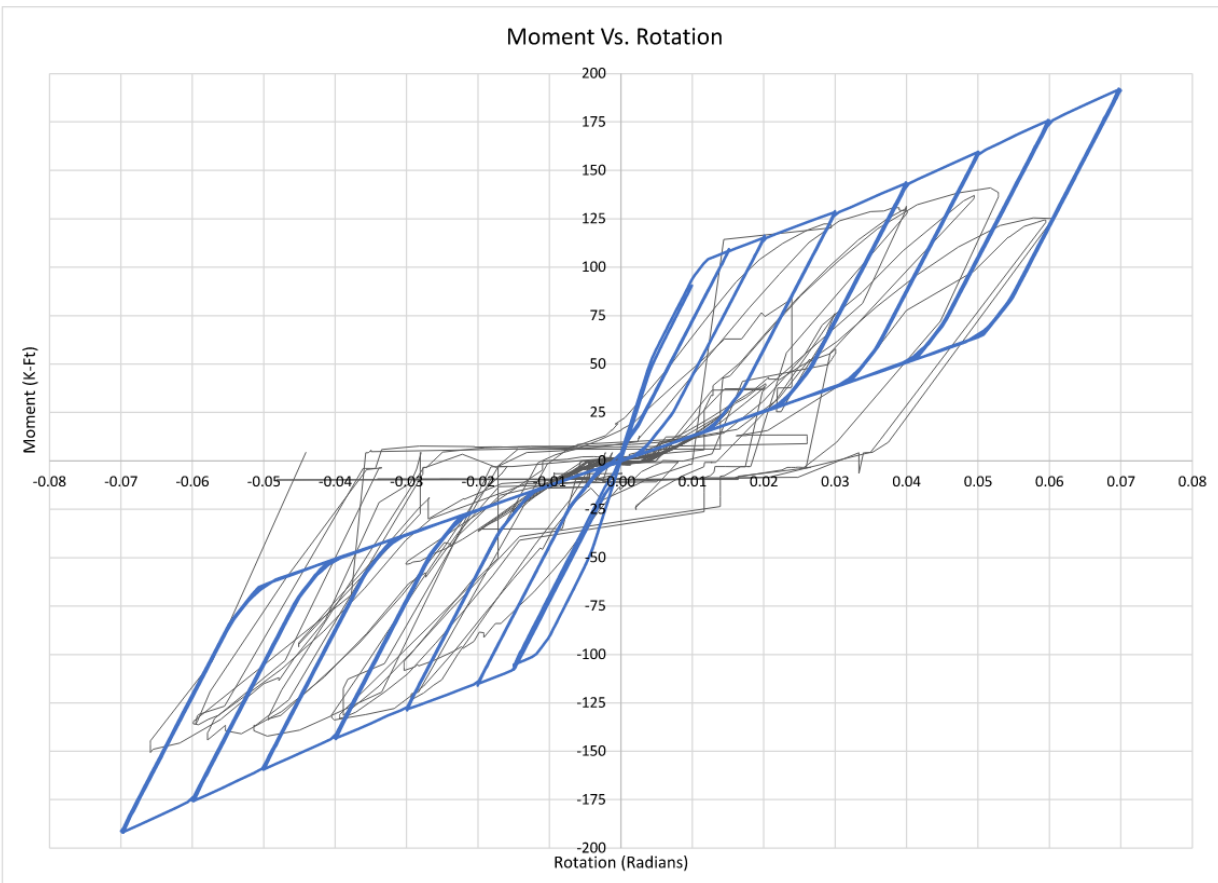

Figure 7.3 – Overlay of Moment Vs. Rotation Comparison

One potential area related to this discrepancy is the web connection. This area is thought to be a source of the discrepancy due to the difficulty modeling the actual web connection behavior in the finite element model. In theory, the web connection is meant to resist zero moment. In order to investigate if this is true within the analysis model, a free body diagram must be made. This free body diagram can be seen in Figure 7.4. Using this free body diagram and the results from the finite element analysis model, the moment that is being resisted by the web connection can be determined for each step of the loading protocol used within the analytical model (see Appendix G).

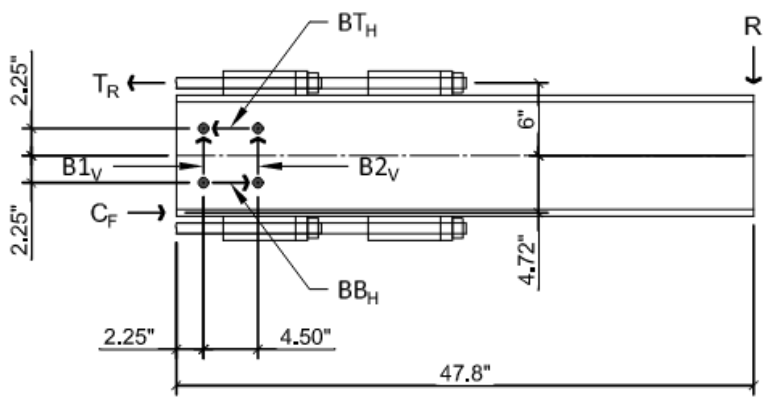

Figure 7.4 – Free Body Diagram of Connection

In this figure, the following variables are used:

T_R = Total tension force in the threaded rods

C_F = Compressive force in flange

BT_H = Horizontal component of the force in the top bolts

BB_H = Horizontal component of the force in the bottom bolts

$B1_V$ = Vertical component of the force in the first column of bolts

$B2_V$ = Vertical component of the force in the second column of bolts

From this exercise, it is found that the web connection within the finite element analysis model is indeed resisting moment. Using the free body diagram and the results obtained from the finite element model, the amount of moment resisted by the web connection was determined at each step of the time-history analysis. The moment resisted by the threaded rods could then be determined by subtracting the moment resisted by the web connection from the total moment resisted. The total moment versus rotation, threaded rod moment versus rotation, and web connection moment versus rotation can all be seen in Figure 7.5. The threaded rod moment and web connection moment are then indicated as “decoupled” as they have been separated from the total moment.

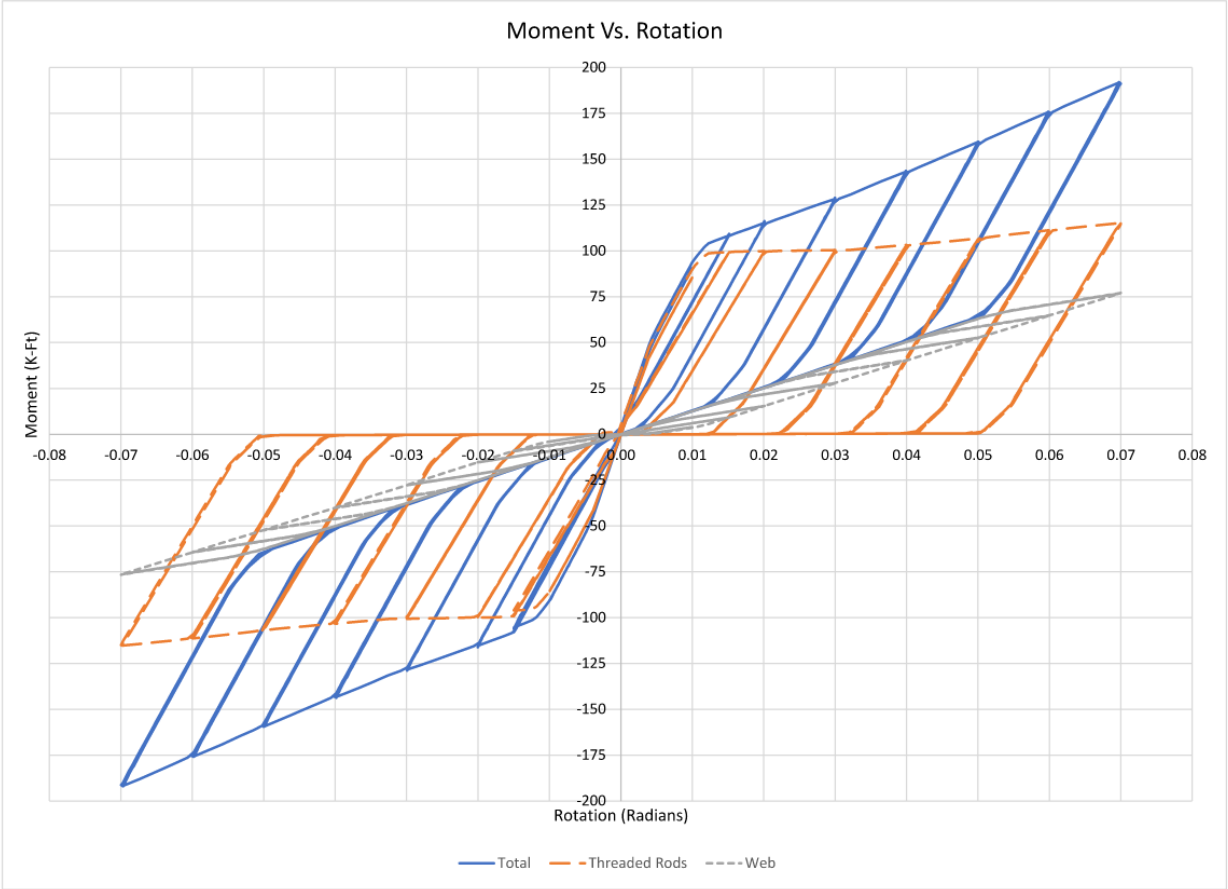

Figure 7.5 – Decoupled Moment Vs. Rotation

Once the moments have been decoupled, it is clear to see that the threaded rods are yielding within the model and behaving as predicted. Within this figure, initial yielding as well as strain-hardening of the threaded rods can be seen by the flat portion of the threaded rod moment capacity followed by an increase in moment capacity.

This decoupled moment versus rotation can then be compared to the physical test results as shown in Figure 7.6. As opposed to the moment versus rotation comparison shown in Figure 7.3, the predicted moment capacity is less than that obtained during physical testing. A comparison of both the decoupled moment versus rotation and total moment versus rotation

on the physical test moment versus rotation can be seen in Figure 7.7. Based on these comparisons, it is apparent that the web connection was resisting a portion of the moment during the physical test.

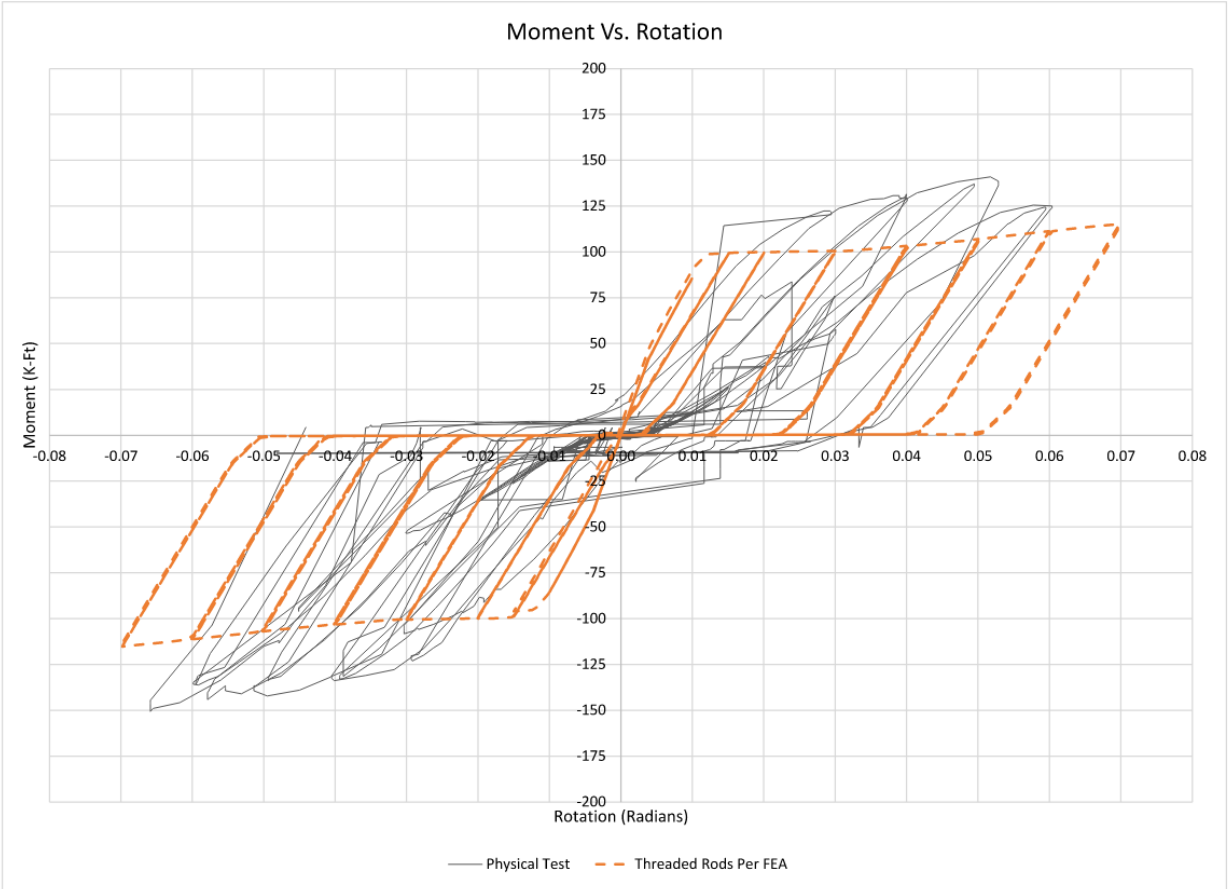

Figure 7.6 – Comparison of Decoupled Moment Vs. Rotation

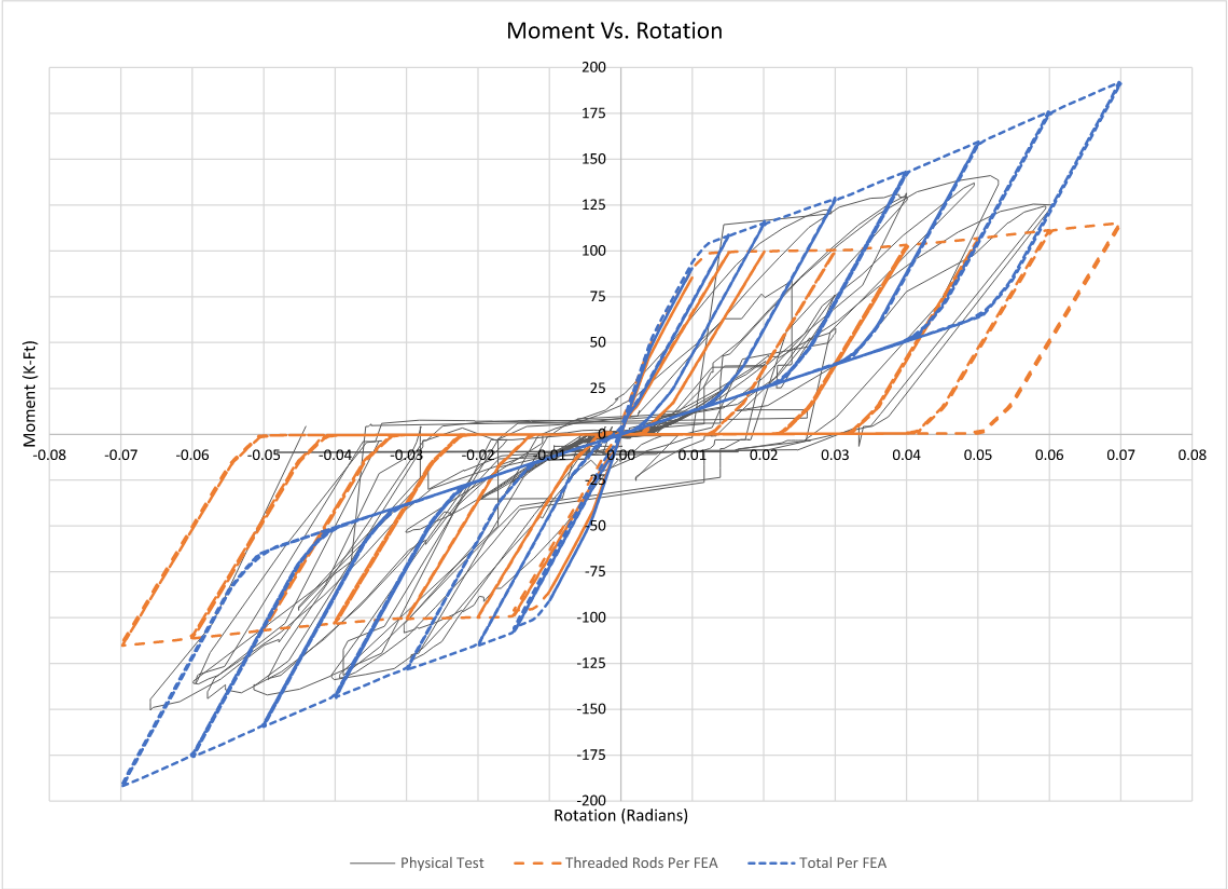

Figure 7.7 – Overlay of Decoupled and Total Moment Vs. Rotation Comparison

Although moment resistance by the web connection was not intended to be accounted for, the data from the finite element analysis can be adjusted to account for this moment. This was done to see if the data from the finite element analysis can more closely match the physical test results. Through an iterative process, 40% of the moment resisted by the web connection was added to the decoupled moment to obtain similar moment capacities between the physical test and finite element analysis test results; the resulting overlay of moment versus rotation can be seen in Figure 7.8. As seen in this figure, the data from the finite element analysis model appears to closely match the results obtained from the physical testing.

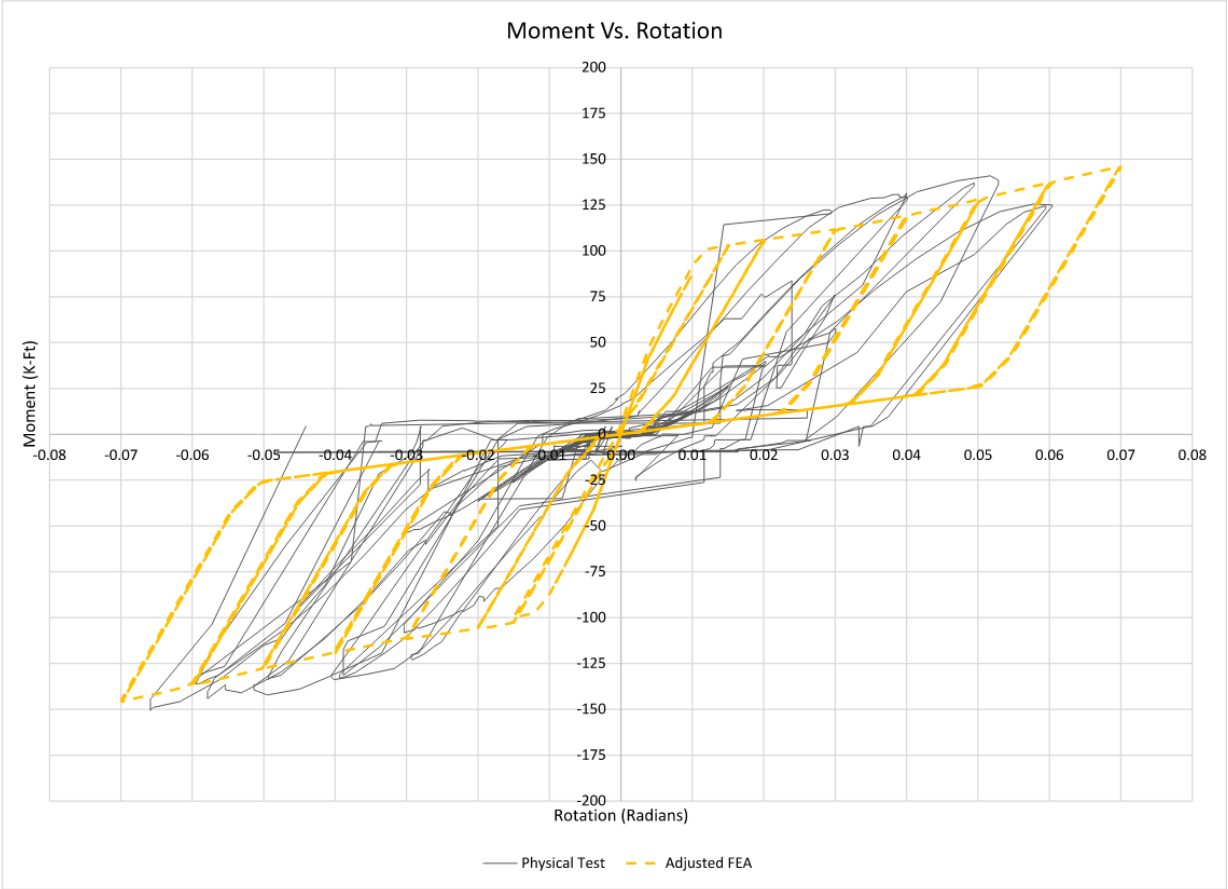

Figure 7.8 – Adjusted Moment Vs. Rotation Comparison

The question, then, is why the finite element analysis model appears to match the physical test results more closely when only a portion of its web connection's moment resistance is accounted for. The author believes this is due to how the interaction between the bolts and supporting material is modeled within the SAP2000 computer program. As discussed above, the bolt behavior is modeled as a series of compression only links. These links also include gap behavior. Therefore, the links only resist load while in the compressed state, and only after the specified gap has been closed. This gap was intended to represent the hole dimension relative to the bolt diameter. However, after this gap has been closed, the link will

resist load based on its relative stiffness compared to the rest of the analytical model. However, in the physical test specimen, the bolts are able to resist load as soon as load is applied based on the frictional resistance between the beam web and connection plates due to the tension in the bolts resulting from tightening of the bolts. This frictional resistance is present until the bolt bears out on the surrounding material. At this point, the load resistance of the bolts should be similar to that which is modeled in the finite element model. However, as discussed above, it did not appear that the bolts bore out against the base material. Instead, the washers appeared to "plow" into the web plates. This plowing of the washers through the material was not able to be modeled within the finite element model. Therefore, the moment resistance of the web connection within the finite element analysis model resulted in a stiffer connection and, therefore, resisted more total moment. As stated above, this was not a desired result; a possible solution for this inconsistency is discussed below in Chapter 9.

Finally, a comparison of rod load versus load step can be made. This can be seen in Figure 7.9. From this comparison several items can be seen. First, both the physical test and finite element analysis model show that an initial tension of roughly 14 kips was applied to the threaded rods. Second, both the physical test and finite element analysis model clearly show the threaded rods experience yielding during the later loading cycles. This can be seen by the fact that the force in the rods reaches 0 kips and stays there for a portion of time. Finally, it can be seen that the force within the threaded rod was higher during the physical testing versus what was experienced by the rods in the finite element analysis model. This is expected from the previous discussion about the amount of moment resisted by the web connection in the finite element model versus the physical test. Since the web connection in the finite element

analysis model appears to resist more moment than that in the physical model, the resulting forces in the threaded rod to achieve the same moment will be less. The thick red line in these figures represents the yield strength of the threaded rods.

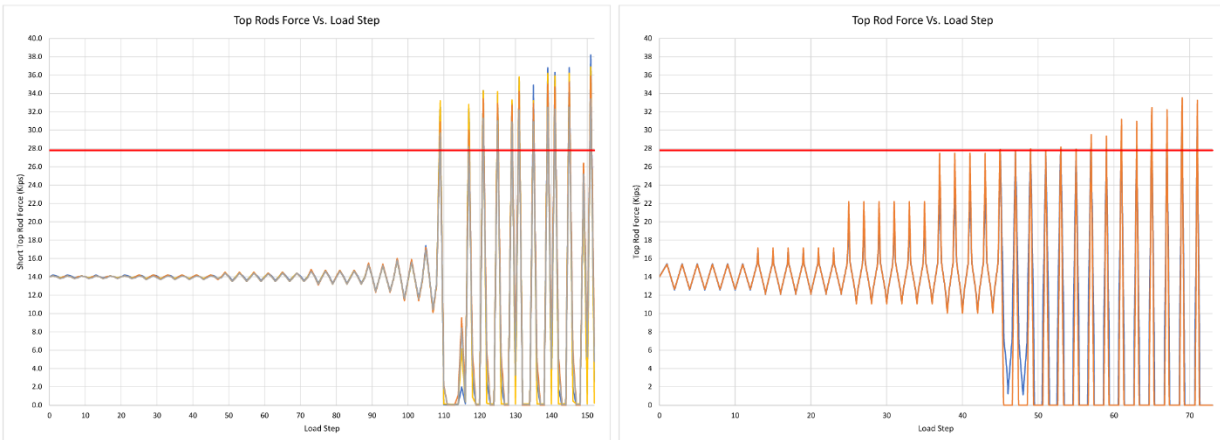

Figure 7.9 – Top Rod Load Vs. Load Step Comparison

CHAPTER 8

APPLICATION OF PROPOSED CONNECTION

8.1. Practical Considerations

There are several considerations which must be addressed for the application of the proposed YTR connection. First, as discussed in Section 2.1.4.3, the commentary to AISC 341-16 indicates that the $0.80M_p$ requirement need not be met if it can be shown that the connection in question does not experience degradation at the specified drift limits. Also, as discussed in Section 5.2.2, a degradation of the connection was not observed during the test at the specified drift limits. Therefore, a limit lower than $0.80M_p$ could be used for the YTR moment connection. A minimum cross-sectional area for the threaded rods of 50% of the beam's flange area is suggested for the YTR moment connection. This is similar to the requirements for the RBS moment connection which has a lower limit on flange area of 50%.

Second, it was noted during the setup of the test specimen, while pretentioning the threaded rods, that care was necessary to equalize the level of pretension in all rods. If all rods on the "top" side of the beam were pretentioned fully, then a relatively large gap would open at the "bottom" side of the beam. A level of pretention that would be larger than desired would then be required to close this gap. Sequentially and incrementally pretentioning the threaded rods can provide consistent pretention levels in all rods. Therefore, during the installation of a YTR moment connection in a moment frame, similar care must be taken to

correctly pretention the threaded rods. Although not investigated as part of this project, two methods could be utilized for achieving the specified pretension. First, a method similar to the Calibrated Wrench Pretensioning method used for pretensioning high-strength bolts could be developed for pretensioning the threaded rods. Alternatively, the use of jack chairs could be utilized to pretension the threaded rods similar to what is done for prestressing tendons in prestressed and post-tensioned concrete members.

Third, an important aspect of the YTR moment connection is the necessity of bearing in the flange opposite the threaded rods in tension. As an erected steel structure has many tolerance allowances (including ASTM A6 tolerances, fabrication tolerances, and erection tolerances), there could be many opportunities for the YTR moment connection to not be perfectly aligned during erection. Therefore, if gaps are present between the beam flanges prior to pretensioning of the threaded rods, shims could be installed to fill the gaps. To prevent any shims used from falling out during the life of the structure, they should be tack-welded into place. As the shims will only be loaded in compression, there should be no concern regarding fatigue issues with this welding.

8.2. Proposed Design Procedures

The design procedures for the YTR moment connection are outlined in Section 3.2. These proposed design procedures are reorganized and summarized in the following. The variables used in these procedures are shown in Figure 8.1. It should be noted that per Section 2.4.1 of AISC 358-16, the resistance factors for ductile and nonductile limit states shall be 1.00 and 0.90, respectively, for available strengths that are calculated in accordance with the AISC

standard. For the procedures discussed below, these resistance factors are used for the design of the lugs supporting the threaded rods. All other checks will use the provisions and corresponding resistance factors as outlined in AISC 360-16.

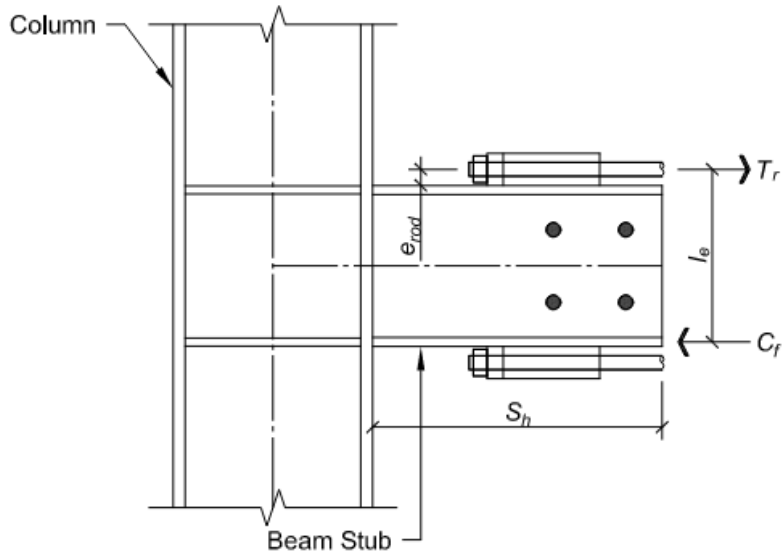

Figure 8.1 – Design Variables

Step 1 – Determine force couple used to size the threaded rods.

$$T_r = C_f = M_r/l_e$$

Where

$$T_r = Tension\ force\ in\ threaded\ rods$$

$$C_f = Compressive\ force\ in\ beam\ flange$$

$$M_r = Required\ flexural\ strength$$

$$l_e = e_{rod} + d_b - t_f/2$$

$$e_{rod} = Distance\ from\ flange\ face\ to\ center\ of\ threaded\ rod$$

$$d_b = beam\ depth$$

$$t_f = beam\ flange\ thickness$$

Step 2 – Choose the number of threaded rods (N_{tr}), as well as their diameter or area (A_{tr}), and grade.

$$\phi N_{tr} F_y A_{tr} \geq T_r$$

Step 3 – Determine the probable maximum moment, M_{pr}, at the splice location.

$$M_{pr} = N_{tr} C_{pr} R_y F_y A_{tr} l_e$$

(Note: C_{pr} = 1.2 and R_y = 1.15 per Section 5.1)

Step 4 – Determine the minimum length of threaded rod ($l_{rod\ min}$) to be used to facilitate reaching the specified story drift of 0.04 radians. The equation below is simplified from that used in Section 4.2.2 by accommodating the specified drift entirely through the threaded rod elongation.

$$\delta_{rod} = 2l_e \tan(0.04/2)$$

$$l_{rod,min.} = 1.5\delta_{rod}/0.18 = 8.33\delta_{rod}$$

Note: The 0.18 in this equation is a constant based on the minimum elongation specified in the ASTM F1554 specification as discussed in Section 4.2.2 while the 1.5 factor represents the safety factor to be used.

Step 5 – Determine the maximum shear, V_s, at the splice location based on a free body diagram of the beam between the splice locations. A gravity load based on the load combination $1.2D + f_1L + 0.2S$ should be used and M_{pr} shall be included at the YTR connection(s).

Step 6 – Determine the maximum probable moment, M_f, at the face of the column.

$$M_f = M_{pr} + V_s S_h$$

Where S_h is the distance from the face of the column to the splice as shown in Figure 8.1.

Step 7 – Determine the maximum shear, V_u, at the face of the column.

$$V_u = \frac{2M_{pr}}{L_h} + V_{gravity}$$

Where

$$V_{gravity} = Beam\ shear\ shear\ force\ resulting\ from\ the$$

$$1.2D + f_1L + 0.2S\ load\ combination$$

$$L_h = Distance\ between\ beam\ splices$$

Step 8 – Design the lugs supporting the threaded rods.

Step 9 – Determine the pretension load, f_t, to be applied to the threaded rods.

This pretension will be based on the moment which is to be resisted by the YTR connection under non-seismic load combinations (denoted as M_{NS}).

$$T_{pt} = Tension\ in\ threaded\ rods\ due\ to\ non - seismic\ load\ combinations$$

$$= \frac{M_{NS}}{l_e}$$

$$f_t = T_{pt}/N_{tr}$$

Step 10 – Check the flexural strength of the column.

Step 11 – Check stiffening requirements of the column.

Step 12 – Size the beam web to column flange weld.

Step 13 – Design the web splice.

8.3. Example Problem Summary – Two-Story Storage Warehouse

It is important to understand the process outlined above during the overall design of a moment frame. Therefore, an example problem has been briefly described below and presented in full in Appendix B. The example problem is based on a two-story steel-framed storage warehouse located in Kennett, MO. The floor plan and elevation for the structure are shown in Figures 8.2 and 8.3, respectively. The building utilizes Steel Ordinary Concentrically Braced Frames for the Seismic Force-Resisting System in the east/west direction and Steel Special Moment Frames in the north/south direction. The new YTR moment connection as proposed above will be utilized for the moment connections in the north/south direction.

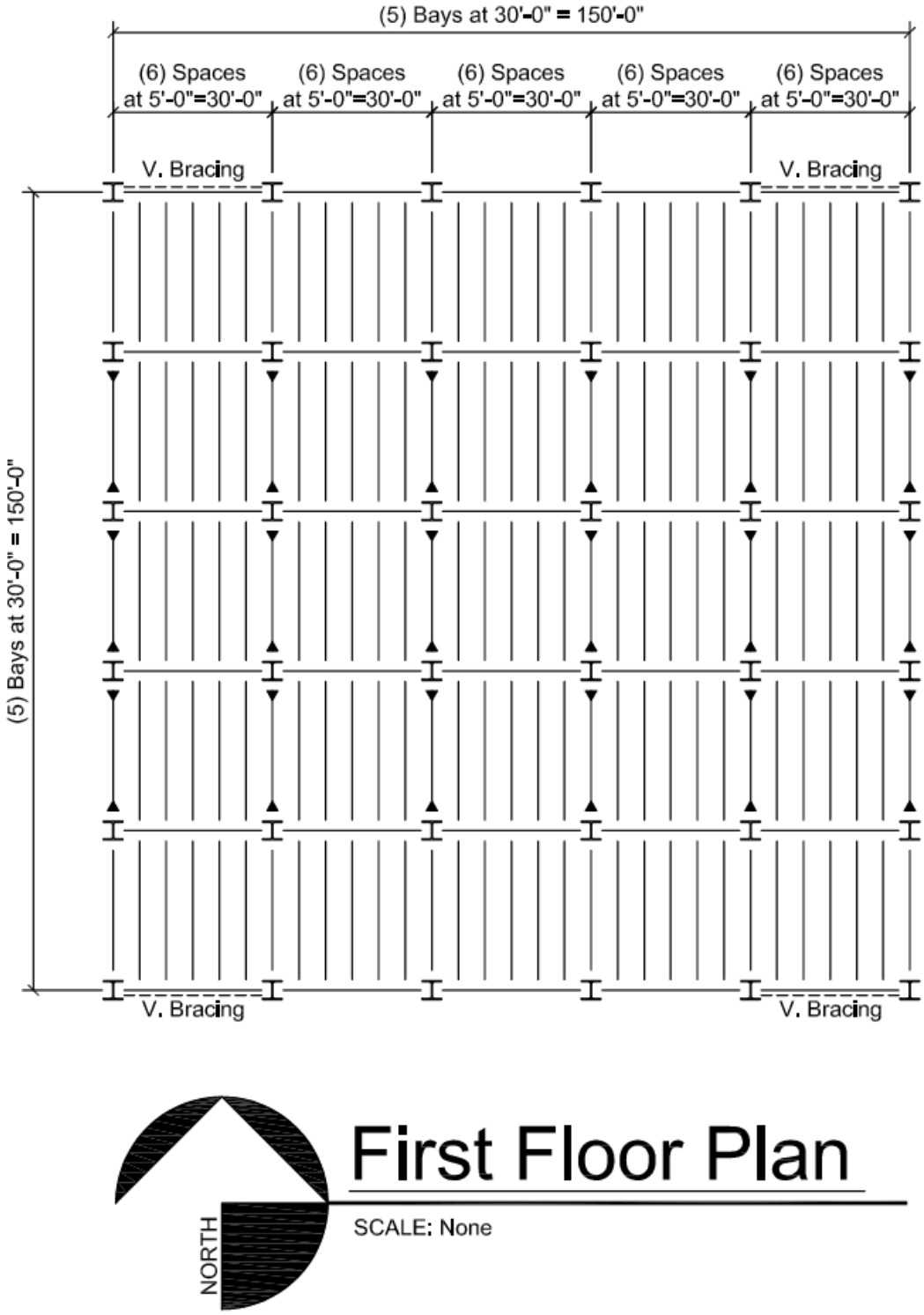

Figure 8.2 – First Floor Plan

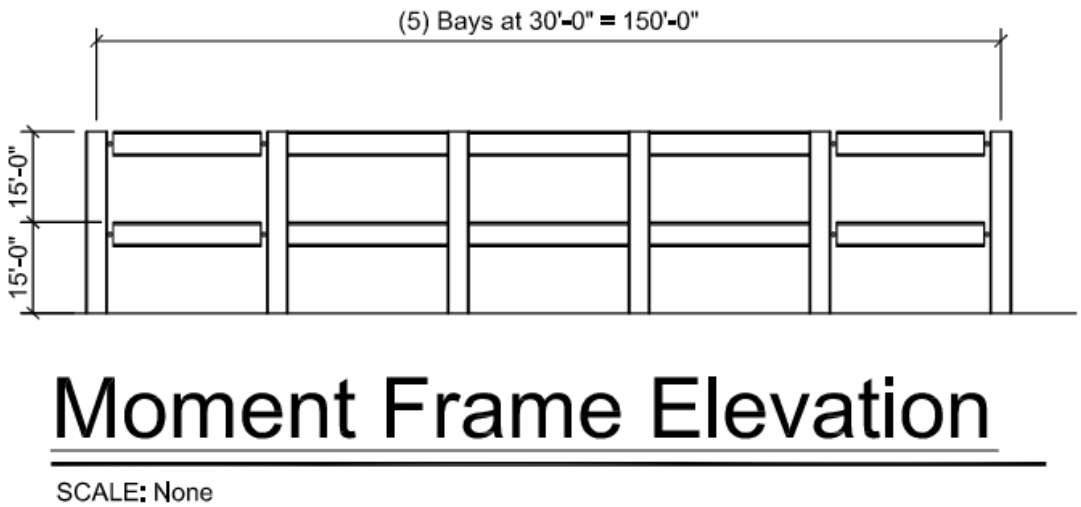

Figure 8.3 – North/South Moment Frame Elevation

As outlined in Appendix B, the columns for the moment frames are W14x257s, the floor beams are W30x108s, and the roof beams are W12x40s. These were sized to meet the drift limits prescribed in ASCE 7-16. The YTR moment connection was then sized and is shown in Figure 8.4.

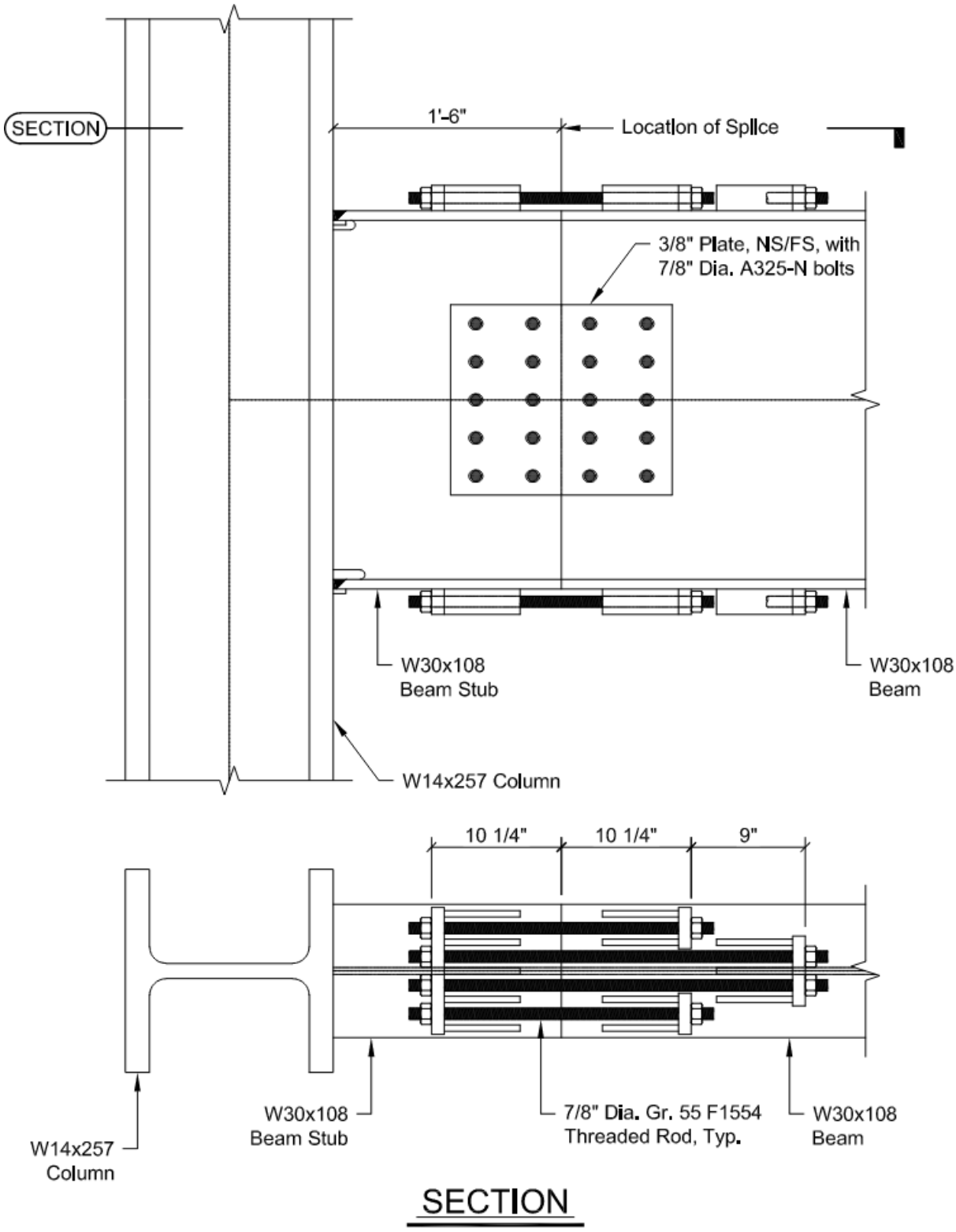

Figure 8.4 – Example Problem YTR Moment Connection Layout

There are several items to take note of in this example problem. First, as is often the case in high-seismic applications, the size of the beams and columns were dictated by drift limitations as opposed to strength. As a result, the moment required at the YTR connection is a small fraction of the moment capacity of the beam.

Secondly, due to this discrepancy of demand versus capacity, the YTR connection could potentially be sized with a relatively small amount of cross-sectional area for the threaded rods. This demonstrates the benefit of connections like the YTR moment connection or the Reduced Beam Section moment connection. With the capacity of the moment connection limiting the amount of moment that can be transferred to the surrounding structure, the surrounding structure can be sized more economically.

Thirdly, the discrepancy of demand versus capacity was large enough that the recommended minimum cross-sectional area of the threaded rods noted above (50% of the beam flange area) was applied to the connection. Since the recommended minimum cross-sectional area was used to size the threaded rods as opposed to being sized based on the load demand, the full cost-savings potential of the YTR moment connection cannot be realized for this example. This may be a common situation when the beam size has been selected based on drift limits as opposed to strength requirements. However, the YTR moment connection still provides some cost savings as the surrounding structure need only be designed to be stronger than the moment developed by the connection as opposed to the full beam's flexural strength.

Finally, when comparing the required lengths of the threaded rods as compared to the minimum lengths, it appears that the minimum lengths will often govern. The minimum length

determined in the example problem (10.2”) was not overly long. Therefore, the author believes that threaded rods in the 2’ to 3’ range will be more than adequate in most situations to accommodate the yielding required.

CHAPTER 9

SUMMARY AND CONCLUSIONS

9.1. Summary of Project

This project was undertaken to develop a new moment connection which could be used in Intermediate and Special Steel Moment Frames. The goals of developing this new moment connection include 1) provide a seismic moment connection that is easy to fabricate and install, 2) provide a moment connection which has easily replaceable yielding elements after a seismic event, and 3) provide a moment connection that is not proprietary. The author believes that none of the current prequalified moment connections which can be used in steel moment frame systems meet all three of these goals.

This new moment connection is called the Yielding Threaded Rod, or YTR, moment connection of which an example can be seen in Figure 9.1. As can be seen in this figure, the innovative feature of this proposed moment connection is the inclusion of threaded rods above and below the beam at a splice near the supporting column. Tension in these threaded rods, along with bearing at the opposite beam flange, resist the moment which develops at the beam splice during a seismic event (as well as other lateral and gravity moments which may develop). The intent is for the threaded rods to yield during a design-level seismic event to provide the necessary energy dissipation. The surrounding structure is then designed to be stronger than the YTR moment connection, thus protecting the surrounding structure from experiencing any

yielding during the seismic event. The threaded rods can then be replaced after the seismic event. Differing lengths of threaded rods can be used in the connection to provide different levels of load at which the threaded rods yield. This allows the connection to resist moment developed from smaller seismic events without yielding all of the threaded rods.

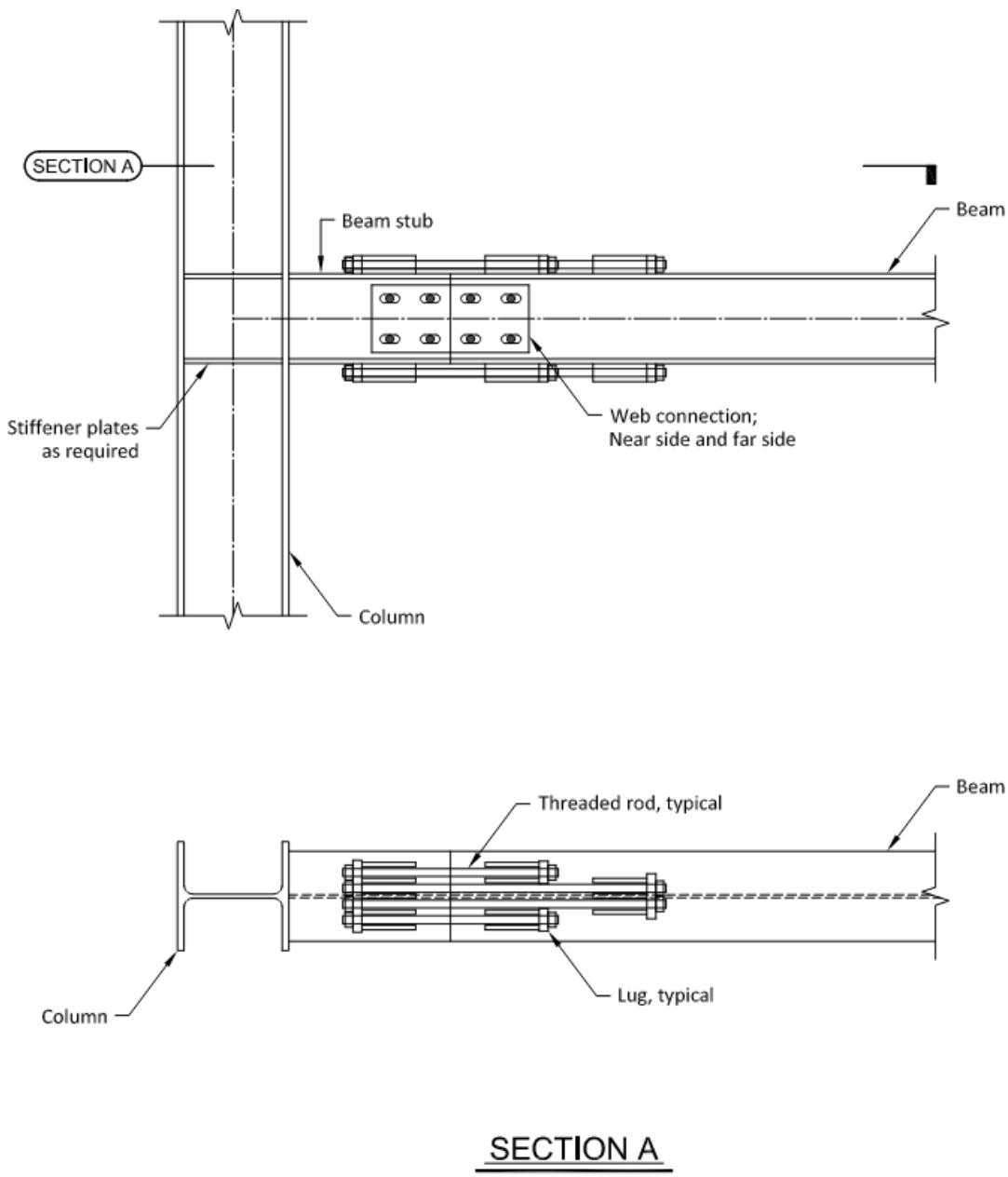

Figure 9.1 – Example YTR Moment Connection

9.2. Summary of Results and Conclusions

One physical test of the YTR connection was performed. Data collected from the testing of this physical specimen included applied displacements and the resulting forces. Ultimately, moments and rotations were determined from the test. A computer model using the computer program SAP2000 was subsequently created to replicate the physical test. Data from the computer model was obtained and compared with the experimental results. Through comparison of the physical test and analytical test results, it was determined that the computer model was able to predict the behavior of the physical specimen with sufficient accuracy after some adjustments were made to the web connection. Conclusions and recommendations are made based on the computer model predictions.

Both the physical testing and the computer model indicated that the YTR connection was able to accommodate the 0.04 radian drift specified as a minimum for a Steel Special Moment Frame connection. In fact, the YTR connection was able to accommodate drifts well beyond this specified minimum. The physical specimen was pushed to a drift of roughly 0.066 radians before the test was stopped due to limitations of the testing equipment. The computer model was displaced to a drift of 0.07 without numerical/computational issues developing in the model.

Furthermore, the YTR connection was able to substantially maintain its moment capacity and did not experience any significant degradation during the testing. This is an important observation as this behavior allows the connection to develop less than $0.80M_p$ while still meeting the intent of the code (as outlined in the commentary to AISC 341-16 Section E3).

The physical test specimen behaved as expected except for the behavior of the web connection. As force was applied to the specimen, the resulting moment at the connection was resisted through a force couple that developed between the tension force in the threaded rods and compression present in the opposite beam flange. As the applied force was increased, the threaded rods yielded with the shorter threaded rods yielding first. The connection was able to maintain the applied load at a far greater rotation than what is required by AISC 341-16.

As the physical test specimen behaved mostly as expected, it can be concluded that the original motivation for the development of this new moment connection type can be realized. Namely, providing a connection which is easy to fabricate and install while also being replaceable after a seismic event. As outlined in Section 8.2, a design procedure is presented for the design of this moment connection; this design procedure could be added to AISC 341 to allow engineers to design the YTR connection which would meet the goal of not being a proprietary connection.

As mentioned in Section 9.1, the innovative feature of this proposed moment connection is the inclusion of threaded rods to resist the tension component of the force couple developed from the moment at the connection. These threaded rods also act as the fuse in the system during a design-level seismic event. As the threaded rods are easily and cheaply (relatively speaking) replaced, they are an ideal item to be the sacrificial member in the moment frame. This is as opposed to the beam or other connection material used in the current prequalified connections.

Finally, as discussed in Section 2.1.9, performance-based seismic design is becoming more common within the design community. Due to the predictable behavior of the YTR moment connection, this moment connection lends itself well for use in performance-based seismic design. With this predictable behavior, the performance goals used during the performance-based seismic design procedure can be easily verified. Also, the utilization of threaded rods of different lengths, which then accommodate different levels of rotation prior to yielding, allow the design engineer to achieve different goals within the performance-based design procedure. One of these goals may require immediate occupancy which requires the structure to remain plumb after a seismic event. This self-centering capability can also be accomplished with the YTR moment connection by insuring the longer threaded rods remain elastic during the specified seismic event. These characteristics are unique to the YTR moment connection as existing prequalified moment connections do not offer this stepped behavior.

9.3. Recommendations

The YTR moment connection has the potential to become an additional prequalified connection for use in IMF and SMF systems in high seismic zones. Therefore, the author recommends that additional investigation of this new connection type be carried out as noted in Section 9.4 (Suggestions for Future Work).

The proposed moment connection as investigated in this dissertation is shown in Figure 9.2. This connection utilized a bolted plate on either side of the web to provide shear transfer between the beam stub and beam segment. As first noted in Section 5.2.1, this web connection did not behave as expected during testing, and as discussed in Section 7.1, resisted

more moment than was anticipated. This was not the original intent. Therefore, it is recommended that this web connection to be altered to utilize a back-to-back angle connection for the web connection as shown in Figure 9.3. The author believes that this connection type would not allow slippage to occur in the web connection while also minimizing the amount of moment resisted by the web connection. Minimizing the amount of moment resisted by the web connection would be accomplished by utilizing angles with thicknesses no thicker than that required for shear transfer. This web connection is believed to resist less moment than the bolted web plate connection as the angles would resist the strong axis moment through weak-axis bending of the angles as opposed to bolt friction of the bolted-web plate connection. The load path for the angles should be less stiff thus resisting less of the strong-axis moment than the bolted web plate connection. The angles would utilize bolts in both legs which would allow the angles to be replaced, if necessary, after a seismic event.

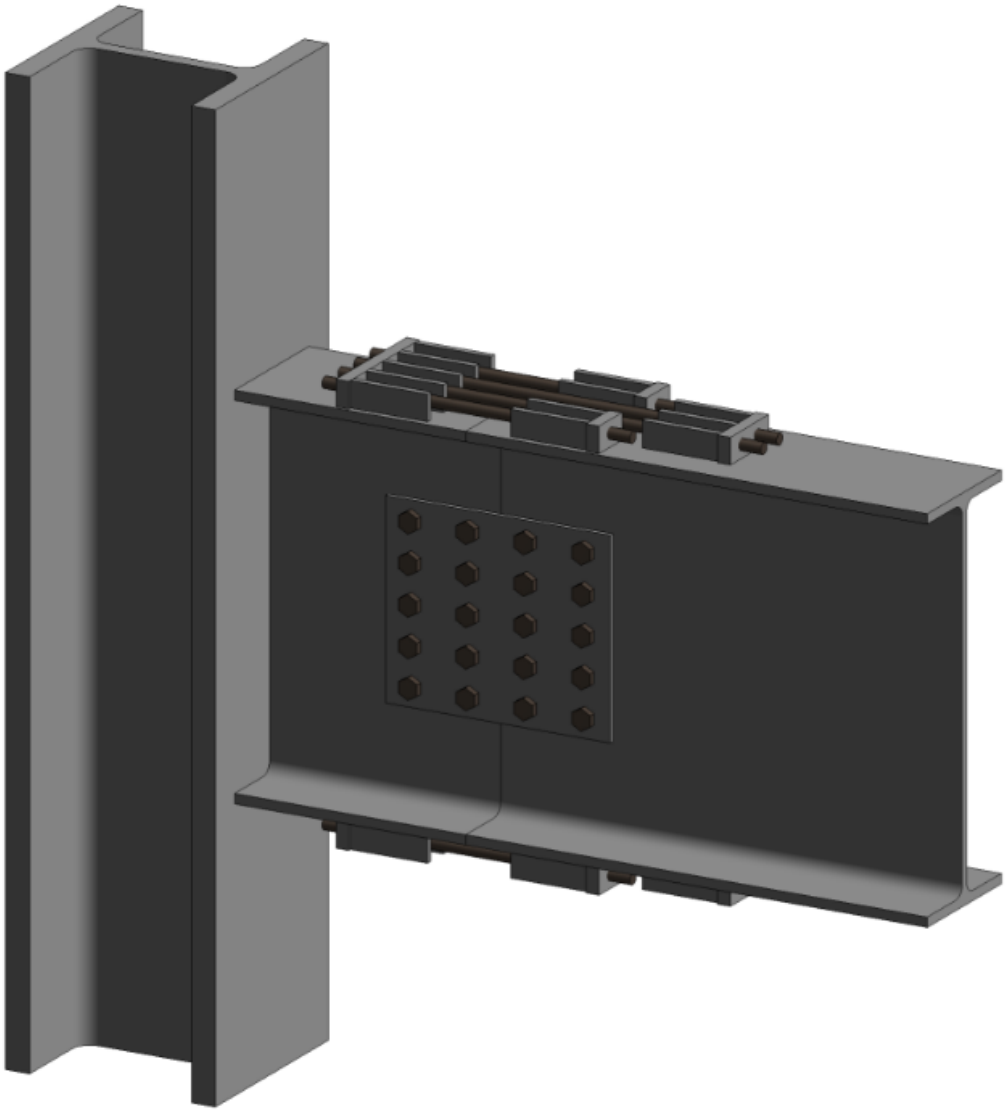

Figure 9.2 – YTR Moment Connection with Plate Web Connection

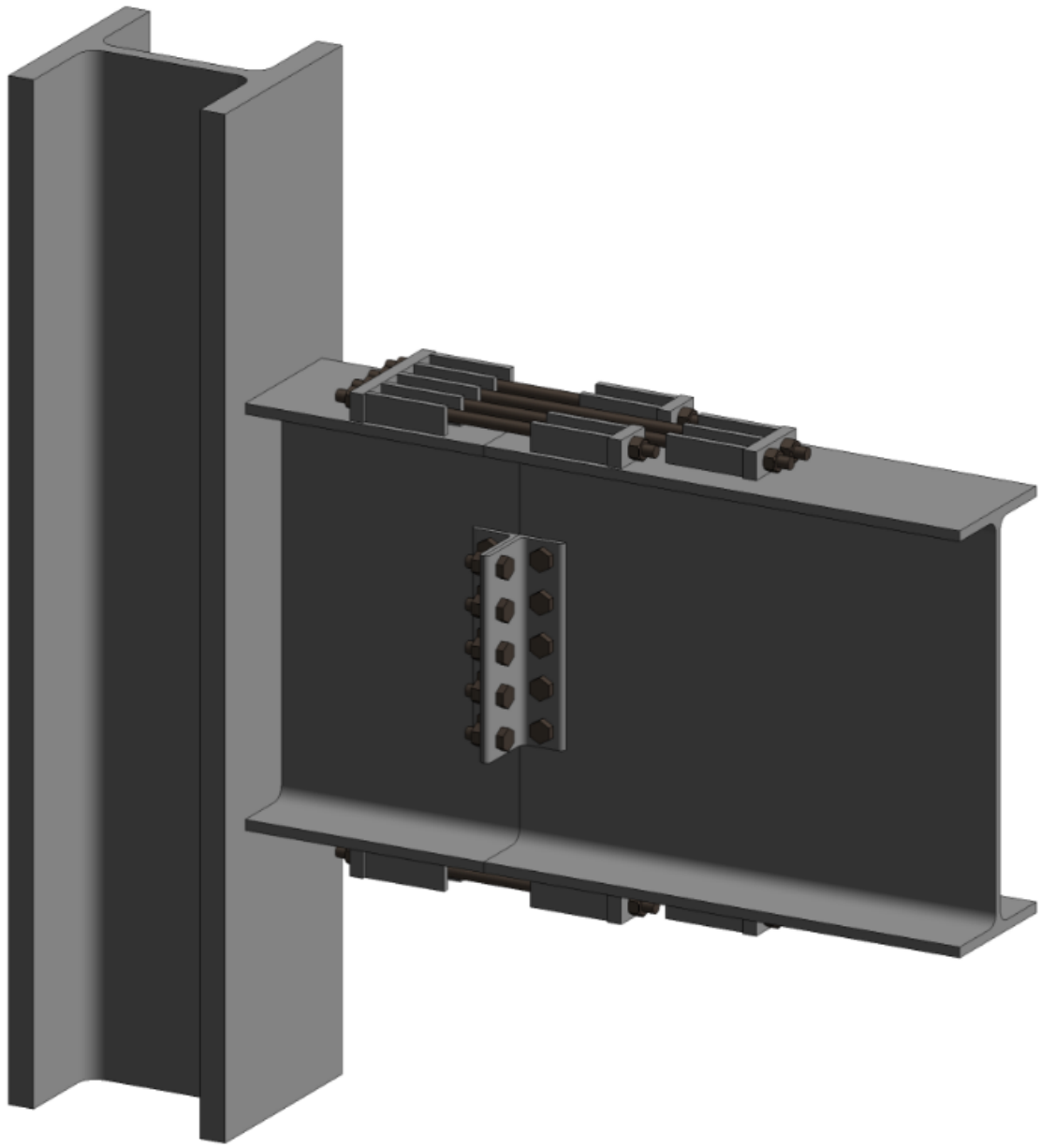

Figure 9.3 – YTR Moment Connection with Double Angle Web Connection

9.4. Suggestions for Future Work

One suggestion is that additional physical testing be carried out for different sizes of beams and columns. Additional finite element models could then also be created to perform parametric studies. If the behavior of the additional specimens and analytical models correlate

well with each other as well as with the findings in this study, then additional confidence and acceptance would be gained regarding the performance of the YTR connection.

Additionally, different grades and / or types of threaded rods could be investigated for use in the YTR moment connection. With different options available, the possibility of matching the capacity to the demand more closely would lead to a more economical structure.

It is also recommended that future testing be done on full lengths of threaded rods with the nuts threaded onto the rods. Although tension tests were carried out on milled specimens of the threaded rod as discussed in Section 5.1, it is important to verify that the results from these tests are valid for the full-scale threaded rods with engagement of the nuts.

Future testing could also implement a dynamic loading protocol as opposed to the slow loading pace used during this project's testing. This would capture any effects from impact loading as the gap which develops after the threaded rods have yielded opens and closes between the nut and lug during successive loading cycles. The loading protocol used should match that which is shown in Figure 2.2 and summarized in Table 2.1. However, in addition to this loading protocol, the test specimen could be subjected to loading protocols based on actual seismic event time-history accelerations. This could provide valuable insight into the performance of the YTR moment connection during a realistic seismic event.

Additional analytical models of prototypical moment frames making use of the YTR moment connection should also be carried out. These models should be nonlinear time-history analyses conducted to verify the seismic performance of the investigated moment frames utilizing the YTR moment connection within the analytical models.

An additional application of the YTR moment connection could be at the base of a column. This application would provide a fixed-base column connection with self-centering capabilities similar to other "rocking" column base connections currently under development; for example Experimental Evaluation of a Rocking Damage-Free Steel Column Base with Friction Devices (Freddi et al., 2020) . This application of the YTR moment connection would require additional research which could be done at a future date.

Another possible improvement to the connection would be to replace the lug plates and finger plates with a cast or forged "sled." This sled would be a prefabricated single piece that would accept the threaded rods and be welded to the beam flange. A possible advantage to the use of this sled is that these sleds could be sized for typical number and size combinations of threaded rods. This would lead to consistent sizing and fabrication. This would most likely lead the YTR connection to be a proprietary system as the effort to design and fabricate these sleds would need to be offset financially; this would negate one of the original goals of this project of not being a proprietary connection.

9.5. Closing

This dissertation proposes a new connection type to be used in moment frame systems subjected to high seismic forces. The connection type as described above is replaceable and non-proprietary; two properties desirable to the engineering community. As building codes and their associated seismic requirements continue to evolve, additional options in the connection space are needed to reliably resist the prescribed loads, thus providing life safety, is a benefit to the engineering community and the public in general. The proposed YTR

connection is an additional option to the existing prequalified moment connections presented in AISC 358-16.

APPENDIX A

BOLT COEFFICENT CALCULATION FOR PHYSICAL TEST

The calculations below follow the procedure presented in Rapid Determination of Ultimate Strength of Eccentrically Loaded Bolt Groups (Brandt, 1982).

Placing the origin at the lower left bolt, the centroid can be located by inspection.

x_o = 2.25” y_o = 2.25”

Determine J as shown below in Table A.1:

Bolt	x (in.)	y (in.)	$x-x_o^2$ (in.^{2})	$y-y_o^2$ (in.^{2})	$x^2 + y^2$ (in.^{2})
1	0	0	5.0625	5.0625	10.125
2	0	4.5	5.0625	5.0625	10.125
3	4.5	0	5.0625	5.0625	10.125
4	4.5	4.5	5.0625	5.0625	10.125
					Σ = J = 40.5

Table A.1 – Determination of J

Assuming a 1k unit load, determine the moment about the centroid:

$$M_o = (-1k)(2.25" + 2.25") = -4.5k - in.$$

Determine distance to instantaneous center:

$$a_{x1} = -P_y J/nM_o = -(-1k)(40.5in.^2)/(4)(-4.5k - in.) = -2.25"$$

$$a_{y1} = P_x J/nM_o = (0)(40.5in.^2)/(4)(-4.5k - in.) = 0"$$

Determine the moment about the instantaneous center:

$M_{p1} = (-1k)(2.25" + 2.25" + 2.25") = -6.75k - in.$

In Table A.2 below, the following equations are used:

$\Delta = 0.34(d_i/d_{max})$

$R/R_{ult} = (1 - e^{-10\Delta})^{0.55}$

$R_x = -(d_y/d)(R/R_{ult})R_{ult}$

$R_y = (d_x/d)(R/R_{ult})R_{ult}$

With $R_{ult} = -M_p/\sum M_i$

Bolt	Distances from I.C.			d^2	Δ	R/R_{ult}	M	R_x	R_y
	d_x (in.)	d_y (in.)	d (in.)	(in.^{2})	(in.)		(k-in.)	(k)	(k)
1	0	-2.25	2.25	5.06	0.152	0.873	1.97	0.427	0
2	0	2.25	2.25	5.06	0.152	0.873	1.97	-0.427	0
3	4.5	-2.25	5.03	25.3	0.34	0.982	4.94	0.215	0.429
4	4.5	2.25	5.03	25.3	0.34	0.982	4.94	-0.215	0.429
Summation:				60.75			13.81	0	0.858

Table A.2 – First Iteration of Bolt Instantaneous Center

Determine bolt coefficient:

$C_{u1} = \Sigma M_i/M_p = 13.81/6.75 = 2.05$

Determine unbalanced force:

$F_{xx1} = P_x + \Sigma R_x = 0 + 0 = 0$

$F_{yy1} = P_y + \Sigma R_y = -1 + 0.858 = -0.142k$

$F_1 = \sqrt{0^2 + -0.142k^2} = 0.142k$

Perform a second iteration.

Determine new distance to instantaneous center:

$$a_{x2} = -F_{yy1}J/nM_o = -(-0.142k)(40.5in.^2)/(4)(-4.5k - in.) = -0.320"$$

$$a_{y1} = F_{xx1}J/nM_o = (0)(40.5in.^2)/(4)(-4.5k - in.) = 0"$$

Determine the new moment about the instantaneous center:

$$M_{p2} = (-1k)(2.25" + 2.25" + 2.25" + 0.320") = -7.07k - in.$$

In Table A.3 below, the same equations as noted above are used:

Bolt	Distances from I.C.			d^2	Δ	R/R_{ult}	M	R_x	R_y
	d_x (in.)	d_y (in.)	d (in.)	(in.^{2})	(in.)		(k-in.)	(k)	(k)
1	0.32	-2.25	2.27	5.16	0.145	0.864	1.96	0.421	0.06
2	0.32	2.25	2.27	5.16	0.145	0.864	1.96	-0.421	0.06
3	4.82	-2.25	5.32	28.3	0.34	0.982	5.22	0.204	0.438
4	4.82	2.25	5.32	28.3	0.34	0.982	5.22	-0.204	0.438
Summation:				66.9			14.36	0	0.994

Table A.3 – Second Iteration of Bolt Instantaneous Center

Determine bolt coefficient:

$$C_{u2} = \Sigma M_i/M_p = 14.36/7.07 = 2.03$$

Determine unbalanced force:

$$F_{xx2} = P_x + \Sigma R_x = 0 + 0 = 0$$

$$F_{yy2} = P_y + \Sigma R_y = -1 + 0.994 = -0.006k$$

$$F_2 = \sqrt{0^2 + -0.006k^2} = 0.006k$$

Predict final bolt coefficient:

$$C_u = (F_1^2 C_{u2} - F_2^2 C_{u1})/(F_1^2 - F_2^2)$$

$$C_u = [(0.142k)^2(2.03) - (0.006k)^2(2.05)]/[(0.142k)^2 - (0.006k)^2] = 2.03$$

APPENDIX B

EXAMPLE PROBLEM

A two-story steel-framed storage warehouse is located in Kennett, MO. The structure utilizes Steel Ordinary Concentrically Braced Frames for the Seismic Force-Resisting System in the east/west direction and Steel Special Moment Frames in the north/south direction. The new YTR moment connection as proposed above will be utilized for the moment connections. As this the proposed moment connection is the focus of this paper, the Steel Ordinary Concentrically Braced Frame design will be ignored. The first-floor plan can be seen in Figure B.1 (note that the roof plan layout will be identical) while the building cross-section (showing the typical moment frame layout) can be seen in Figure B.2.

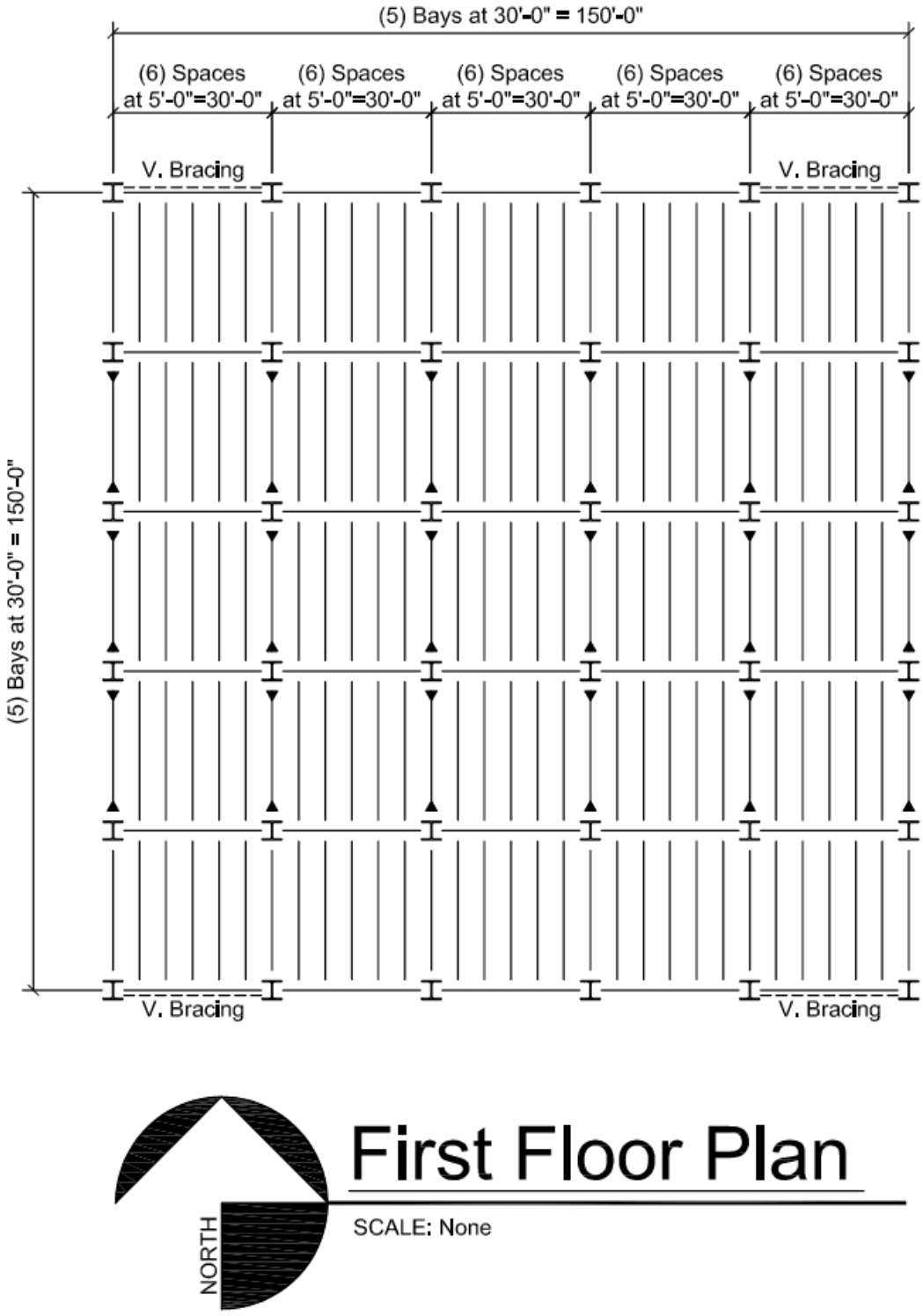

Figure B.1 – First Floor Plan

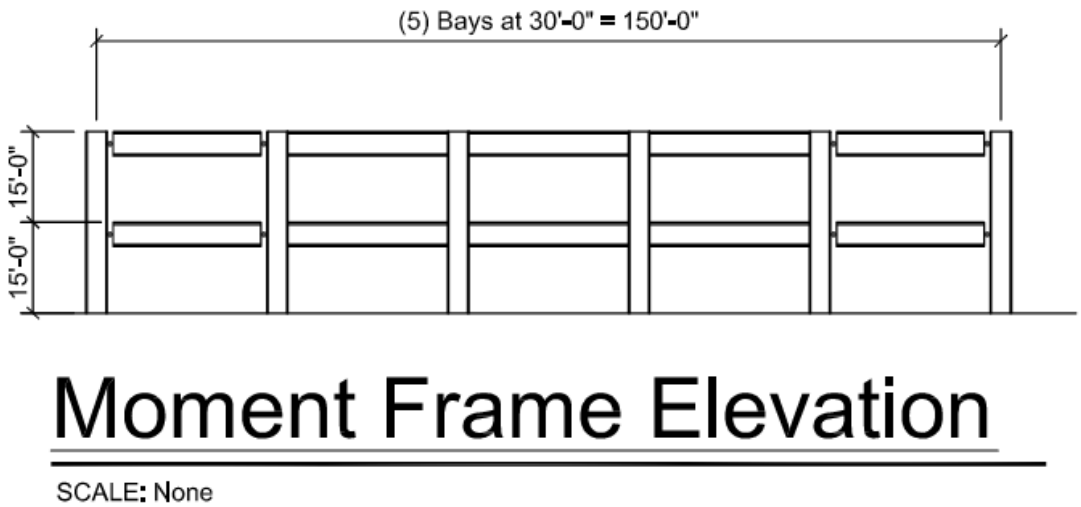

Figure B.2 – Moment Frame Elevation

The first step in any design is to assemble the imposed loads that the structure must resist. The only dead load associated with this example problem will be from the self-weight of the structure, roofing material (assume 5psf), and cladding (assume 5psf). This will be classified as a heavy storage; therefore, the first-floor live load will be 250 psf per ASCE 7-16 Table 4.3-1. Roof live load, also per ASCE 7-16 Table 4.3-1, will be 20 psf. Also, per ASCE 7-16 Figure 7.2-1, the ground snow load, p_g, is equal to 10 psf. Rain and ice loads will be ignored for this example but would need to be included for a complete design.

Determine Roof Snow Load:

Follow the provisions of Chapter 7 of ASCE 7-16

Assume Partial Exposure with a Surface Roughness Category C

Exposure Factor, C_e = 1.0 per ASCE 7-16 Table 7.3-1

Thermal Factor, C_t = 1.0 per ASCE 7-16 Table 7.3-2

Risk Category II per ASCE 7-16 Table 1.5-1

Importance Factor, I_s = 1.0 per ASCE 7-16 Table 1.5-2

Flat Roof Snow Load per ASCE 7-16 Eq. 7.3-1:

$$p_f = 0.7C_eC_tI_sp_g$$

$$p_f = 0.7(1.0)(1.0)(1.0)(10psf) = 7psf$$

Minimum Snow Load for Low-Slope Roof per ASCE 7-16 Section 7.3.4:

$$p_m = I_sp_g$$

$$p_m = 1.0(10psf) = 10psf > 7psf \therefore Controls$$

Determine Wind Load:

Follow the provisions of Chapters 26 and 27 of ASCE 7-16

Risk Category II per ASCE 7-16 Table 1.5-1

Basic Wind Speed, V = 105mph per ASCE 7-16 Figure 26.5-1B

Wind Directionality Factor, K_d = 0.85 per ASCE 7-16 Table 26.6-1

Exposure Category *C* per ASCE 7-16 Section 26.7

Topographic Factor, K_{zt} = 1.0 per ASCE 7-16 Section 26.8

Ground Elevation Factor, K_e = 1.0 per ASCE 7-16 Section 26.9

Gust Effect Factor, G = 0.85 per ASCE 7-16 Section 26.11

Note: *G* is assumed initially and will need to be verified during analysis

Assume Enclosed Building per ASCE 7-16 Section 26.12

Internal Pressure Coefficient, GC_{pi} = +/-0.18 per ASCE 7-16 Table 26.13-1

Velocity Pressure Exposure Coefficient, K_z and K_h per ASCE 7-16 Table 26.10-1:

Height	K_z
0-15’	0.85
15’-20’	0.90
20’-25’	0.94
25’-30’	0.98 (Use for K_h as well)

Velocity Pressure, q_z and q_h per ASCE 7-16 Eq. 26.10-1:

$$q = 0.00256 K_z K_{zt} K_d K_e V^2$$

Height	q_z
0-15’	20.4psf
15’-20’	21.6psf
20’-25’	22.6psf
25’-30’	23.5psf (Use for q_h as well)

External Pressure Coefficient, C_p per ASCE 7-16 Figure 27.3-1:

Location	C_p
Windward Wall	0.8
Leeward Wall	-0.5
Sidewall	-0.7
Roof from 0 to h/2	-1.3 / -0.18
Roof over h/2	-0.7 / -0.18

Wind Pressure, p per ASCE 7-16 Eq. 27.3-1:

$$p = qGC_p - q_h(GC_{pi})$$

Location	p
Windward Wall from 0’-15’	18.1 or 9.6 psf
Windward Wall from 15’-20’	18.9 or 10.5 psf
Windward Wall from 20’-25’	19.6 or 11.1 psf
Windward Wall from 25’-30’	20.2 or 11.8 psf
Leeward Wall	-5.8 or -14.2 psf
Sidewall	-9.8 or -18.2 psf
Roof from 0 to h/2	0.6 or -30.2 psf

Roof over h/2	0.6 or -18.2 psf

Note that the first value represents an internal suction while the second value represents internal pressure. For this example, the first value will be used. Therefore, each interior frame line will see:

Location	*w*
Windward Wall from 0'-15'	18.1(30) = 543 plf
Windward Wall from 15'-20'	18.9(30) = 567 plf
Windward Wall from 20'-25'	19.6(30) = 588 plf
Windward Wall from 25'-30'	20.2(30) = 606 plf
Leeward Wall	-5.8(30) = -174 plf
Roof	0.6(30) = 18 plf

Determine Seismic Load:

Follow the provisions of Chapters 11 and 12 of ASCE 7-16

Risk Category II per ASCE 7-16 Table 1.5-1

Assume Site Class D per ASCE 7-16 Section 11.4.3

Mapped Spectral Response Acceleration Parameter at Short Periods, S_s = 1.826g

Mapped Spectral Response Acceleration Parameter at 1s Period, S_1 = 0.648g

Short-Period Site Coefficient, F_a = 1.0 per ASCE 7-16 Table 11.4-1

Long-Period Site Coefficient, F_v = 1.7 per ASCE 7-16 Table 11.4-2

Spectral Response Acceleration Parameter at Short Periods per ASCE 7-16 Eq. 11.4-1:

$$S_{MS} = F_a S_s = 1.0(1.826g) = 1.826g$$

Spectral Response Acceleration Parameter at 1s Period per ASCE 7-16 Eq. 11.4-2:

$$S_{M1} = F_v S_1 = 1.7(0.648g) = 1.102g$$

Note: Per ASCE 7-16 Section 11.4.8, a site response analysis should be performed since S_1 is greater than 0.2 on a Site Class D site. However, proceed with normal provisions as this is for academic purposes only.

Design Spectral Acceleration Parameter at Short Periods per ASCE 7-16 Eq. 11.4-3:

$$S_{DS} = (2/3)(S_{MS}) = (2/3)(1.826g) = 1.217g$$

Design Spectral Acceleration Parameter at 1s Period per ASCE 7-16 Eq. 11.4-4:

$$S_{D1} = (2/3)(S_{M1}) = (2/3)(1.102g) = 0.734g$$

Seismic Importance Factor, I_e = 1.00 per ASCE 7-16 Table 1.5-2

Seismic Design Category D per ASCE 7-16 Tables 11.6-1 and 11.6-2

As noted above, Steel Special Moment Frames are used for the Seismic Force-Resisting System in the direction under consideration. Per ASCE 7-16 Table 12.2-1:

Response Modification Factor, R = 8

Overstrength Factor, Ω_o = 3

Deflection Amplification Factor, C_d = 5 1/2

Note: There are no Horizontal Structural Irregularities (ASCE 7-16 Table 12.3-1) or Vertical Structural Irregularities (ASCE 7-16 Table 12.3-2).

As the moment frames are symmetric, design an interior frame for this example.

Effective Seismic Weight:

First floor: $W_f = (150')(30')[0.25(250psf) + 55psf]/1{,}000 = 529k$

Say 540k to account for structure self-weight

Roof: $W_r = (150')(30')(5psf)/1{,}000 = 22.5k$

Say 30k to account for structure self-weight

Total: $W = 540k + 30k = 570k$

Use the Equivalent Lateral Load Procedure

Approximate Fundamental Period per ASCE 7-16 Eq. 12.8-7 and Table 12.8-2:

$$T_a = C_t h_x^n = 0.028(30')^{0.8} = 0.425sec.$$

Seismic Response Coefficient per ASCE 7-16 Eq's. 12.8-2, 12.8-3, 12.8-5, and 12.8-6:

$$C_s = S_{DS}/(R/I_e) = 1.217g/(8/1) = 0.152$$

$$C_s \leq S_{D1}/T(R/I_e) = 0.734g/(0.425sec.)(8/1) = 0.216$$

$$C_s \geq 0.044S_{DS}I_e = 0.044(1.217g)(1) = 0.054$$

$$C_s \geq 0.5S_1/(R/I_e) = 0.5(0.734g)/(8/1) = 0.046$$

Therefore, C_s = 0.152

Seismic Base Shear per ASCE 7-16 Eq. 12.8-1:

$$V = C_sW = (0.152)(570k) = 86.6k$$

Determine vertical distribution of seismic forces per ASCE 7-16 Eq. 12.8-12:

$$C_{vx} = \frac{w_x h_x^k}{\sum w_i h_x^k}$$

Assume k = 1.0 for structures with a period less than 0.5s per ASCE 7-16 Section 12.8.3. This will have to be verified upon design of the structure.

Location	C_{vx}
First Floor	$(540k)(15')/[(540k)(15') + (30k)(30')] = 0.90$
Roof	$(30k)(30')/[(540k)(15') + (30k)(30')] = 0.10$

Determine applied force at each level per ASCE 7-16 Eq. 12.8-11:

$$F = C_{vx}V$$

Location	*F*
First Floor	$0.90(86.6k) = 77.9k$
Roof	$0.10(86.6k) = 8.7k$

Determine Load Combinations:

Per ASCE 7-16 Sections 2.3.1 and 2.3.6, the following load combinations will be used in the design of the moment frame.

1. 1.4D
2. $1.2D + 1.6L + 0.5L_r$
3. $1.2D + 1.6L_r + 1.0L$
4. $1.2D + 1.6L_r + 0.5W$
5. $1.2D + 1.0W + 1.0L + 0.5L_r$
6. $0.9D + 1.0W$
7. $1.2D + 1.0E_v + 1.0E_h + 1.0L + 0.2S$
8. $0.9D – 1.0E_v – 1.0E_h$

Load combinations 7 and 8 are further modified in Chapter 12 of ASCE 7-16 to clarify the vertical and horizontal effects of the seismic behavior. The vertical effects, E_v, are accounted for by modifying the load factor associated with the dead load while the horizontal effects, E_h, must include a redundancy factor, ρ, as defined in ASCE 7-16 Section 12.3.4. Per ASCE 7-16 Section 12.3.4.2.b, the structure in this example meets the exception where ρ is equal to 1.0. Per ASCE

7-16 Section 12.4.2.2, the vertical effect of the seismic load is equal to $0.2S_{DS}D$; therefore, load combinations 7 and 8 become:

7. $[1.2 + 0.2(1.217)]D + 1.0E_h + 1.0L + 0.2S$ or

   $1.443D + 1.0E_h + 1.0L + 0.2S$

8. $[0.9 – 0.2(1.217)]D – 1.0E_h$ or

   $0.657D – 1.0E_h$

Chapter 12 of ASCE 7-16 also defines how the overstrength factor, Ω_o, is applied to the load combinations. Per ASCE 7-16 Section 12.4.3.1, Ω_o is applied to the horizontal effect of the seismic load where required. Therefore, for elements that require the inclusion of the overstrength factor, load combinations 7 and 8 become:

7. $1.443D + 3.0E_h + 1.0L + 0.2S$
8. $0.657D – 3.0E_h$

Load combinations containing overstrength factors are typically used to design members that are within the seismic load path but are not part of the primary lateral force-resisting systems.

Design of Roof Deck:

Use 1.5B24 deck (1.5psf)

Per Vulcraft Steel Deck (Vulcraft, 2020a), this roof deck can support 154psf for a 3-span condition with 5’-0” spacing for support.

Design of Roof Joists:

With the roof load of 5psf dead load and 20psf live load and 5'-0" joist spacing, the live load on the joist is (20psf)(5'-0") = 100plf and the total load on the joist is (25psf)(5'-0") = 125plf.

Use a 18K3 joist (6.1plf)

Per Vulcraft Steel Joist and Joist Girder Systems (Vulcraft, 2020b), this joist can support a total load of 203plf and a live load of 123plf with an approximate deflection of L/360.

$$R_{DL} = [(5psf)(5') + 6.1plf](30')/2 = 467lb$$

$$R_{LL} = (100plf)(30')/2 = 1{,}500lb$$

Design of Roof Girders:

$$P_{DL} = 2(467lb) = 933lb$$

$$P_{LL} = 2(1{,}500lb) = 3{,}000lb$$

$$P_u = 1.2(933lb) + 1.6(3{,}000lb) = 5{,}920lb = 5.92k$$

$$V_u = (5.92k)(5)/2 = 14.8k$$

$$M_u = (5.92k)(30')/4 + (5.92k)(5') + (5.92k)(10') = 133k - ft$$

Use W16x31 beam

$$w_u = 1.2(31plf) = 37.2plf = 0.0372klf$$

$$V_u = 14.8k + (0.0372klf)(30')/2 = 15.4k$$

$M_u = 133k - ft + (0.0372klf)(30')^2/8 = 137k - ft$

Assume the joists laterally support the beam

Per AISC's <u>Steel Construction Manual, 15th Edition</u> (American Institute of Steel Construction, 2017), Table 3-6:

$\phi V_n = 131k \geq 15.4k \therefore ok$

$\phi M_n = 194k - ft(by\ interpoloation) \geq 137k - ft \therefore ok$

$\delta_{LL} = (3k)(360")^3/(48)(29{,}000ksi)(375in.^4) +$

$(3k)(60")[3(360")^2 - 4(60")^2]/(24)(29{,}000ksi)(375in.^4) +$

$(3k)(120")[3(360")^2 - 4(120")^2]/(24)(29{,}000ksi)(375in.^4)$

$\delta_{LL} = 0.983"$

$L/360 = 360"/360 = 1.00" \geq 0.983" \therefore ok$

$\delta_{TL} = (3.93k)(360")^3/(48)(29{,}000ksi)(375in.^4) +$

$(3.93k)(60")[3(360")^2 - 4(60")^2]/(24)(29{,}000ksi)(375in.^4) +$

$(3.93k)(120")[3(360")^2 - 4(120")^2]/(24)(29{,}000ksi)(375in.^4)$

$\delta_{TL} = 1.29"$

$L/240 = 360"/240 = 1.50" \geq 1.29" \therefore ok$

$R_{DL} = 5(933lb)/2 + (31plf)(30')/2 = 2{,}798lb$

$$R_{LL} = 5(3{,}000lb)/2 = 7{,}500lb$$

Design of Floor Deck:

Use 1.5C24 deck with 5” total concrete thickness (55psf)

Per <u>Vulcraft Steel Deck</u>, this combination of floor deck and concrete can support 264psf for a 3-span condition with 5’-0” spacing for support.

Design of Secondary Floor Beams:

$$w_{DL} = (55psf)(5') = 275plf$$

$$w_{LL} = (250psf)(5') = 1{,}250plf$$

$$w_u = [1.2(275plf) + 1.6(1{,}250plf)] = 2{,}330plf = 2.33klf$$

$$V_u = (2.33klf)(30')/2 = 35.0k$$

$$M_u = (2.33klf)(30')^2/8 = 262k - ft$$

Use W21x44 beam

Note that DL increases to $275plf + 44plf = 319plf$

$$w_u = 1.2(319plf) + 1.6(1{,}250plf) = 2{,}383plf = 2.38klf$$

$$V_u = (2.38klf)(30')/2 = 35.7k$$

$$M_u = (2.38klf)(30')^2/8 = 268k - ft$$

Assume the deck / concrete slab laterally supports the beam

Per AISC's Steel Construction Manual, 15th Edition, Table 3-6:

$$\phi V_n = 217k \geq 35.7k \therefore ok$$

$$\phi M_n = 358k - ft \geq 268k - ft \therefore ok$$

$$\delta_{LL} = 5(1.25klf/12)(360")^4/(384)(29{,}000ksi)(843in.^4) = 0.932"$$

$$L/360 = 360"/360 = 1.00" \geq 0.932" \therefore ok$$

$$\delta_{TL} = 5(1.569klf/12)(360")^4/(384)(29{,}000ksi)(843in.^4) = 1.17"$$

$$L/240 = 360"/240 = 1.50" \geq 1.17" \therefore ok$$

$$R_{DL} = (275plf + 44plf)(30')/2 = 4{,}785lb$$

$$R_{LL} = (1{,}250plf)(30')/2 = 18{,}750lb$$

Design of Floor Girders:

$$P_{DL} = 2(4{,}785lb) = 9{,}570lb$$

$$P_{LL} = 2(18{,}750lb) = 37{,}500lb$$

$$P_u = 1.2(9{,}570lb) + 1.6(37{,}500lb) = 71{,}484lb = 71.5k$$

$$V_u = (71.5k)(5)/2 = 179k$$

$$M_u = (71.5k)(30')/4 + (71.5k)(5') + (71.5k)(10') = 1{,}610k - ft$$

Use W33x130 beam

$$w_u = 1.2(130plf) = 156plf = 0.156klf$$

$V_u = 179k + (0.156klf)(30')/2 = 181k$

$M_u = 1{,}610k - ft + (0.156klf)(30')^2/8 = 1{,}628k - ft$

Assume the secondary beams laterally support the beam

Per AISC's <u>Steel Construction Manual, 15th Edition</u>, Table 3-6:

$\phi V_n = 578k \geq 181k \therefore ok$

$\phi M_n = 1{,}750k - ft \geq 1{,}628k - ft \therefore ok$

$\delta_{LL} = (37.5k)(360")^3/(48)(29{,}000ksi)(6{,}710in.^4) +$

$(37.5k)(60")[3(360")^2 - 4(60")^2]/(24)(29{,}000ksi)(6{,}710in.^4) +$

$(37.5k)(120")[3(360")^2 - 4(120")^2]/(24)(29{,}000ksi)(6{,}710in.^4)$

$\delta_{LL} = 0.687"$

$L/360 = 360"/360 = 1.00" \geq 0.687" \therefore ok$

$\delta_{TL} = (47.1k)(360")^3/(48)(29{,}000ksi)(6{,}710in.^4) +$

$(47.1k)(60")[3(360")^2 - 4(60")^2]/(24)(29{,}000ksi)(6{,}710in.^4) +$

$(47.1k)(120")[3(360")^2 - 4(120")^2]/(24)(29{,}000ksi)(6{,}710in.^4)$

$\delta_{TL} = 0.863"$

$L/240 = 360"/240 = 1.50" \geq 0.863" \therefore ok$

$R_{DL} = 5(9{,}570lb)/2 + (130plf)(30')/2 = 25{,}875lb$

$$R_{LL} = 5(37{,}500lb)/2 = 93{,}750lb$$

Design of Moment Frames:

Determine Story Drift Limits:

Per ASCE 7-16 Section 12.12.1 and Table 12.12-1, $\Delta_a = 0.020h_{sx}$ where h_{sx} is the story height. Since both stories are 15'-0", the allowable story drift is:

$$\Delta_a = 0.020(180") = 3.6"$$

The Deflection Amplification Factor, C_d, must be accounted for in the story drifts per ASCE 7-16 Equation 12.8-15. This is to account for the fact that since the analysis model is an elastic model, it will not predict the true total drifts including inelastic drift. By multiplying the elastic drifts by C_d, an approximation of the total drifts is obtained. Therefore, in order to use the drifts directly from the analysis model, the allowable story drift shall be divided by C_d, which as noted above is equal to 5.5. Therefore, the allowable story drifts if taken directly from the analysis model are:

$$\Delta_a = 3.6"/5.5 = 0.655"$$

However, the reduced stiffness in the area of the YTR connection must also be accounted for. Similar to what is done for Reduced Beam Section moment frames, the elastic drifts obtained from the analysis model will be multiplied by 1.1. Therefore, the allowable story drifts taken directly from the analysis model are:

$$\Delta_a = 0.655"/1.1 = 0.595"$$

Size Framing Members:

With this story drift as a limit, an iterative process was used to size the beams and columns within the moment frame to approach the story drift limit as near as possible while also sizing the beams for strength. Using this process, W14x257 columns, W30x108 floor beams, and W12x40 roof beams were selected for the moment frames. This combination of beams and columns result in a first story drift of 0.589 inches. The second story drift is 0.270 inches.

Design Moment Connection:

The next area to focus on during the design of this example project are the connections of the steel members. For this project, the connection of the W30x108 floor beams to the W14x257 columns will be the area of focus. The connection of the W12x40 roof beams to the W14x257 columns would follow a similar process while the gravity-only beam connections to columns would follow standard AISC procedures.

First, assume the distance of the splice from the face of the column, S_h, is equal to 18”. Therefore, the distance from the centerline of the column to the splice is equal to 18” plus half the depth of the column, or 26.2”. From the analysis model, the maximum moment at this location for non-seismic combinations is 125 k-ft while the maximum moment for seismic combination is 275 k-ft.

Although the maximum moment for the seismic combinations is 275 k-ft, the 50% of beam flange area may govern the design of the threaded rods; this will be verified in Step 2 below. With the moments calculated, the steps as outlined in Section 8.1 are used to size the YTR connection as follows.

Step 1 – Determine force couple used to size threaded rod.

$$l_e = e_{rod} + d_b - t_f/2$$

$$l_e = 1" + 29.8" - 0.5(0.760") = 30.42"$$

$$T_r = C_f = M/l_e$$

$$T_r = C_f = (275k - ft)(12)/30.42" = 108k$$

Step 2 – Choose number of threaded rods, size, and grade to be used.

$$\phi N_{tr} F_y A_{tr} \geq T_r$$

Try (4) 7/8" Dia. Gr. 55 F1554 threaded rods

$$0.9(4)(55ksi)(\pi)(0.875")^2/4 = 119k \geq 108k$$

Verify the area of the threaded rods is greater than or equal to 50% of the flange area:

$$50\%\ Flange\ Area = 0.50(0.760")(10.5") = 3.99in.^2$$

$$Threaded\ Rod\ Area = 4(\pi)(0.875")^2/4 = 2.41in.^2 < 3.99in.^2$$

Therefore, increase to (4) 1 1/8" Dia. Gr. 55 F1554 threaded rods

$$Threaded\ Rod\ Area = 4(\pi)(1.125")^2/4 = 3.98in.^2 < 3.99in.^2$$

This is less than 1% within the requirement of 50% of the beam flange area; therefore, consider this acceptable.

Step 3 – Determine the probable maximum moment, M_{pr}, at the splice location.

$$M_{pr} = N_{tr}C_{pr}R_yF_yA_{tr}l_e$$

$$M_{pr} = 4(1.2)(1.15)(55ksi)[(\pi)(1.125^2)/4](30.42") = 9{,}180k - in.$$

Step 4 – Determine threaded rod lengths to be used to facilitate specified story drift.

$$\delta_{rod} = 2l_e(\tan 0.04/2)$$

$$\delta_{rod} = 2(30.42")(\tan 0.04/2) = 1.22"$$

$$l_{rod,min.} = 8.33\delta_{rod}$$

$$l_{rod,min.} = 8.33(1.22") = 10.2"$$

Therefore, the minimum threaded rod length is 10.2”. With this minimum, arbitrarily use threaded rods with 24” and 33” lengths. These lengths will allow the length between nuts to be greater than the minimum length while also allowing a small length of threads to extend past the nuts.

With the lengths shown above, the connection will be detailed as shown in Figure B.3.

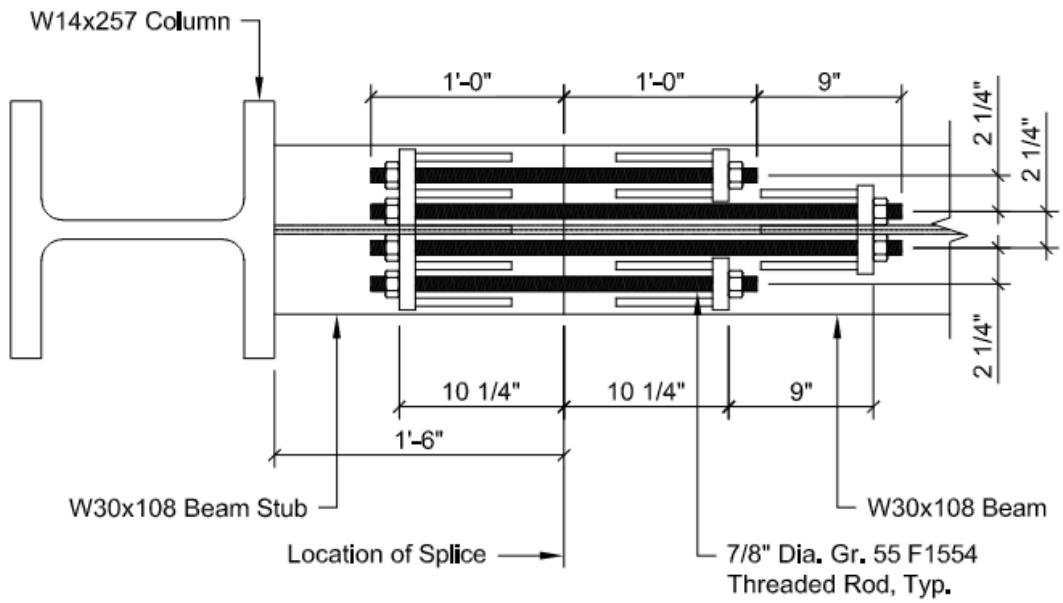

Figure B.3 – Example Problem Threaded Rod Layout

Step 5 – Determine the maximum shear, V_s, at the splice location based on the free body diagram shown in Figure B.4 utilizing the load combination $1.2D + f_1L + 0.2S$ and M_{pr}.

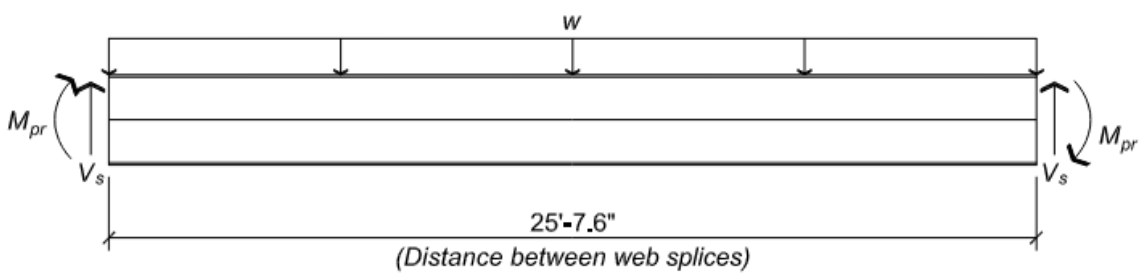

Figure B.4 – Free Body Diagram for Determination of V_s

$$w = 1.2[(55psf)(5') + 108plf] + 1.0(250psf)(5') = 1{,}710plf = 1.71klf$$

$$V_s = (1.71klf)(25' - 8")/2 + 2(9{,}180k - in.)/(25' - 8")(12\,in./ft)$$

$$V_s = 82k$$

Step 6 – Determine the maximum probable moment, M_f, at the face of the column.

$$M_f = M_{pr} + V_s S_h$$

$$M_f = (9{,}180k - in.)/(12\,in./ft) + (82k)(1' - 6") = 888k - ft$$

Step 7 – Determine the maximum shear, V_u, at the face of the column.

$$V_u = \frac{2M_{pr}}{L_h} + V_{gravity}$$

$$V_u = 2(9{,}180k - in)/(25' - 8")(12\,in./ft) + (1.71klf)(28' - 8")/2$$

$$V_u = 84k$$

Step 8 – Design the lugs supporting the threaded rods.

Maximum probable threaded rod force:

$$T_{pr} = C_{pr} R_y F_y A_{tr}$$

$$T_{pr} = (1.2)(1.15)(55ksi)[(\pi)(1.125^2)/4] = 75.4k$$

Per a continuous-beam analysis, the maximum forces within the cross plates and reactions to the finger plates are:

V_{max} = 40.3k R_{max} = 80.6k

M_{max} = 23.7-in. R_{min} = -18.5k (to outermost weld)

The capacities of this plate are:

$$\phi V_n = 1.0(0.6)(50ksi)(2")(1.125") = 67.5k \geq 40.3k \therefore ok$$

$$\phi M_n = 1.0(50ksi)(2")(1.125")^2/4 = 31.6k - in. \geq 23.7k - in. \therefore ok$$

Weld of cross plate to finger plate:

$$f_t = 18.5/1.5 = 12.3\, k/in.$$

$$(E) \geq 12.3/(0.90)(0.6)(70) = 0.325" \therefore \text{ Use } (3/8") \text{ PJP weld}$$

Note that this weld is only required at the outer finger plates as this is the location where the reaction is in tension; other locations will use 5/16" fillet welds.

Bearing of cross plate on finger plate:

$$\phi R_n = 0.90(1.8)(50ksi)(2")(0.625") = 101.3k \geq 80.6k \therefore ok$$

Weld of finger plate to beam flange:

$$f_v = (80.6k)/(5.5") = 14.7\, k/in.$$

$$f_t = (80.6k)(4)/(5.5")^2 = 10.7\, k/in.$$

$$f_r = \sqrt{14.7^2 + 10.7^2} = 18.2\, k/in.$$

$$w \geq (18.2\, k/in.)/(0.90)(0.6)(70)(0.707)(2) = 0.341"$$

Therefore, use 3/8" fillet welds

$$t \geq (14.7\, k/in.)/(0.9)(0.6)(65ksi) = 0.419" \leq 0.625" \therefore ok$$

$$t \geq (10.7\, k/in.)/(1.0)(50ksi) = 0.214" \leq 0.625" \therefore ok$$

$$t_{CSR} = [(14.7\,k/in.)/(1.0)(0.6)(50ksi)(0.625")]^2 +$$

$$[(10.7\,k/in.)/(1.0)(50ksi)(0.625")]^2 = 0.73 \leq 1.0 \therefore ok$$

Step 9 – Determine the pretension to be applied to the threaded rods.

$$T_{pt} = \frac{M_{NS}}{l_e}$$

$$T_{pt} = (147k - ft)(12)/30.42" = 58.0k$$

$$f_t = T_{pt}/N_{tr}$$

$$f_t = 58.0k/4 = 14.5k$$

Step 10 – Check the flexural strength of the column.

$$\phi M_n = \phi F_y Z \geq M_f$$

$$\phi M_n = 0.90(50ksi)(487in.^3)/12 = 1{,}826k - ft \geq 888k - ft \therefore ok$$

Step 11 – Check stiffening requirements of the column.

$$T = C = M_f/(d - t_f)$$

$$T = C = (888k - ft)(12\,in./ft)/(29.8" - 0.760") = 367k$$

Flange Bending (AISC 360-16 Section J10.1):

$$\phi R_n = 0.90(6.25)F_y t_f^2 \geq T$$

$$\phi R_n = 0.90(6.25)(50ksi)(1.89")^2 = 1{,}005k \geq 367k \therefore ok$$

Web Local Yielding (AISC 360-16 Section J10.2):

$$\phi R_n = \phi F_y t_w (5k + l_b) \geq T$$

$$\phi R_n = 1.00(50ksi)(1.18")[5(2.49") + 0.760"] = 779k \geq 367k \therefore ok$$

Web Local Crippling (AISC 360-16 Section J10.3):

$$\phi R_n = \phi 0.80 t_w^2 \left[1 + 3\left(\frac{l_b}{d"}\right)\left(\frac{t_w}{t_f}\right)^{1.5}\right]\sqrt{\frac{EF_y t_f}{t_w}} \geq T$$

$$\phi R_n = 0.75(0.80)(1.18")^2 \left[1 + 3\left(\frac{0.760"}{16.4"}\right)\left(\frac{1.18"}{1.89"}\right)^{1.5}\right]\sqrt{\frac{(29{,}000ksi)(50ksi)(1.89")}{1.18"}}$$

$$\phi R_n = 1{,}360k \geq 367k \therefore ok$$

Web Panel-Zone Shear (AISC 360-16 J10.6):

The effect of inelastic panel-zone deformation on frame stability is not accounted for in the analysis. Therefore, per AISC 360-16 J10.6.a, a comparison between the required axial strength (αP_r) and 40% of the axial yield strength of the column (P_y) is made to determine the which equation to use for web panel-zone shear strength.

$$\alpha P_r = 1.0(465k) = 465k$$

$$0.4P_y = 0.4(50ksi)(75.6in.^2) = 1{,}512k$$

$\alpha P_r \leq 0.4P_y$; therefore:

$$\phi R_n = \phi 0.60 F_y d t_w \geq T$$

$$\phi R_n = 0.90(0.60)(50ksi)(16.4")(1.18") = 523k \geq 367k$$

Therefore, neither stiffeners nor web doubler plates are not required.

Step 12 – Size the beam web to column flange weld.

Weld length, $l_w = T - 2(5/16") = 25.75" - 0.625" = 25.125", Say\ 25"$

$f_v = 84k/25" = 3.36\,k/in.$

$w \geq (3.36\,k/in.)/(0.75)(0.6)(70ksi)(0.707)(2) = 0.075"$

Use 1/4” fillet welds as a minimum per AISC 360-16 Table J2.4.

$t \geq (3.36\,k/in.)/(0.75)(0.6)(65ksi) = 0.115" \leq 0.545" \therefore ok$

Step 13 – Design the web splice.

Try (2) 3/8”x15” web plates with (5) rows of 7/8” Dia. A325-N bolts at 3” vertical spacing as shown in Figure B.5.

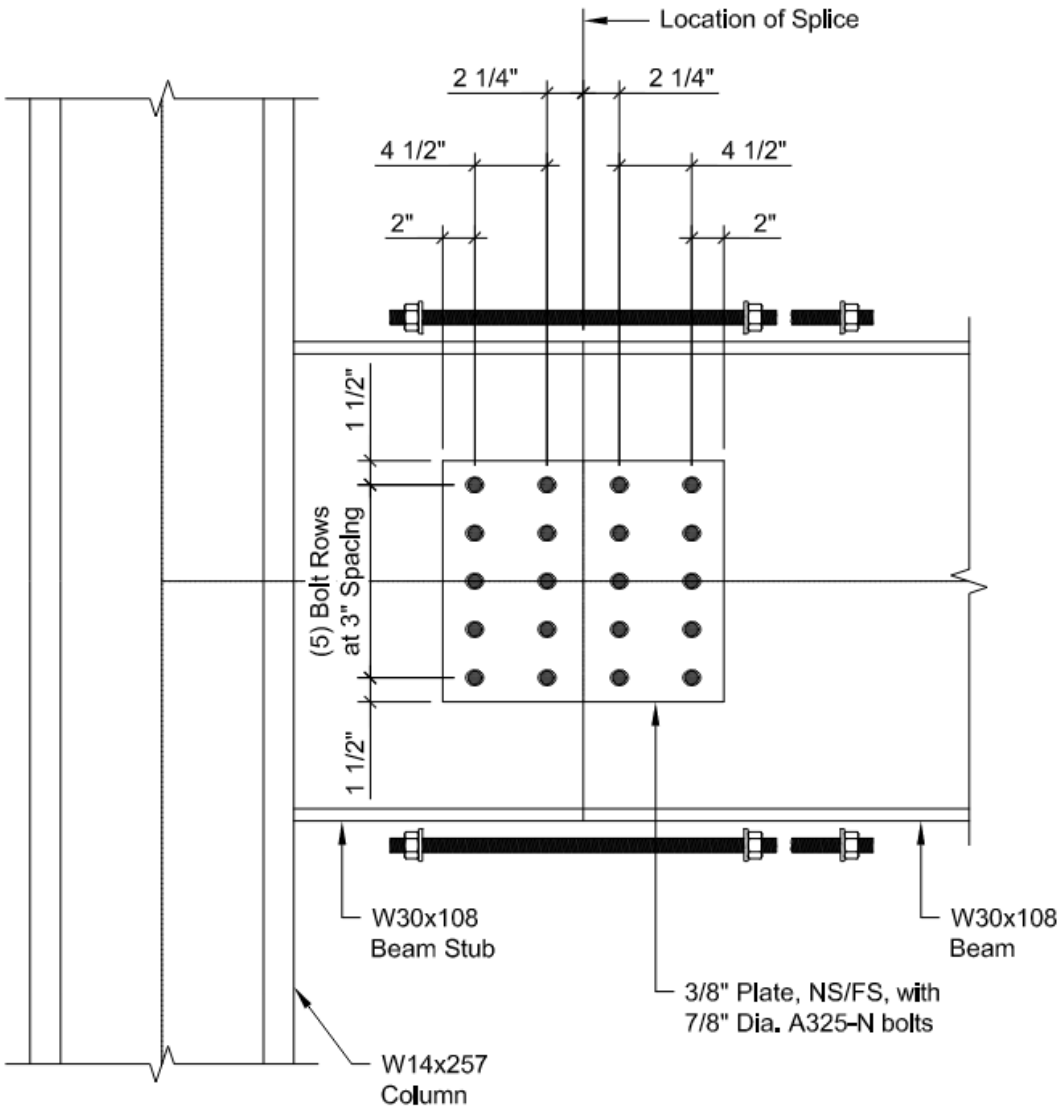

Figure B.5 – Example Problem Web Splice Connection

Shear yielding of the splice plates:

$$\phi V_n = 1.0(0.6)(50ksi)(2)(3/8")(15") = 338k \geq 82k \therefore ok$$

Flexural yielding of the splice plates:

$$\phi V_n = 0.90(50ksi)(2)(1/4)(3/8")(15")^2/2.25$$

$$\phi V_n = 844k \geq 82k \therefore ok$$

Interaction of shear and flexural yielding for the splice plates:

$$CSR = (82k/338k)^2 + (82k/844k)^2 = 0.07 \leq 1.0 \therefore ok$$

Shear rupture of the splice plates:

$$\phi V_n = 0.75(0.6)(65ksi)(2)(3/8\,")[15" - 2(1")]$$

$$\phi V_n = 285k \geq 82k \therefore ok$$

Flexural rupture of the splice plates:

$$Z_n = 2(1/4)(3/8\,")(15")^2 - 2(2)(3/8\,")(1")(3" + 6") = 28.7in.^3$$

$$\phi V_n = 0.75(65ksi)(28.7in.^3)/2.25 = 622k \geq 82k \therefore ok$$

Interaction of shear and flexural rupture for the splice plates:

$$CSR = (82k/285k)^2 + (82k/622k)^2 = 0.10 \leq 1.0 \therefore ok$$

Plate block shear:

$$0.6F_yA_{gv} = 0.6(50ksi)(2)(3/8\,")(13.5") = 304k$$

$$0.6F_uA_{nv} = 0.6(65ksi)(2)(3/8\,")[13.5" - (4.5)(1")] = 263k$$

$$U_{bs}F_uA_{nt} = 0.5(65ksi)(2)(3/8\,")[6.5" - (1.5)(2.25")] = 76.2k$$

$$\phi R_n = 0.75(263k + 76.2k) = 254k \geq 82k \therefore ok$$

Plate buckling:

$$C_b = [3 + \ln(4.5"/15")](1 - 0/15") = 1.80 \leq 1.84 \therefore 1.80$$

$$L_b d/t^2 = (4.5")(15")/(0.375")^2 = 480$$

$$0.08E/F_y = 0.08(29{,}000ksi)/(50ksi) = 46.4$$

$$1.9E/F_y = 1.9(29{,}000ksi)/(50ksi) = 1{,}102$$

Since $0.08E/F_y < L_b d/t^2 \leq 1.9E/F_y$,

$$M_n = 1.80[1.52 - 0.274(480)(50ksi/29{,}000ksi)](50ksi)(1/6)(0.375")(15")^2$$

$$M_n = 1{,}637k - in. \leq M_p = (50ksi)(1/4)(0.375")(15")^2 = 1{,}055k - in.$$

$$\phi V_n = 0.90(2)(1{,}055k - in.)/2.25" = 844k \geq 82k \therefore ok$$

Bolt Shear:

From analysis, the bolt coefficient, C, is equal to 6.52. The calculation of this coefficient can be found in Appendix C.

$$\phi V_n = 0.85(6.52)(0.30)(1.13)(1.0)(39)(2) = 147k \geq 82k \therefore ok$$

Bolt bearing on the splice plates:

$$1.0 l_c t F_u = 1.0[2" - (1/2)(2.25")](2)(3/8")(65ksi) = 42.7\, k/bolt$$

$$1.0 l_c t F_u = 1.0[4.5" - (1)(1")](2)(3/8")(65ksi) = 171\, k/bolt$$

$$2.0 d t F_u = 2.0(7/8")(2)(3/8")(65ksi) = 85.3\, k/bolt$$

$$\phi V_n = 0.75(7.06)(42.7\,k/bolt) = 226k \geq 82k \therefore ok$$

Bolt bearing on the web:

$$1.0 l_c t F_u = 1.0[2.25" - (1/2)(1")](0.545")(65ksi) = 62.0\,k/bolt$$

$$1.0 l_c t F_u = 1.0[4.5" - (1)(1")](0.545")(65ksi) = 124\,k/bolt$$

$$2.0 d t F_u = 2.0(7/8\,")(0.545")(65ksi) = 62.0\,k/bolt$$

$$\phi V_n = 0.75(7.06)(62.0\,k/bolt) = 328k \geq 82k \therefore ok$$

The final YTR Moment Connection layout is shown in Figure B.6.

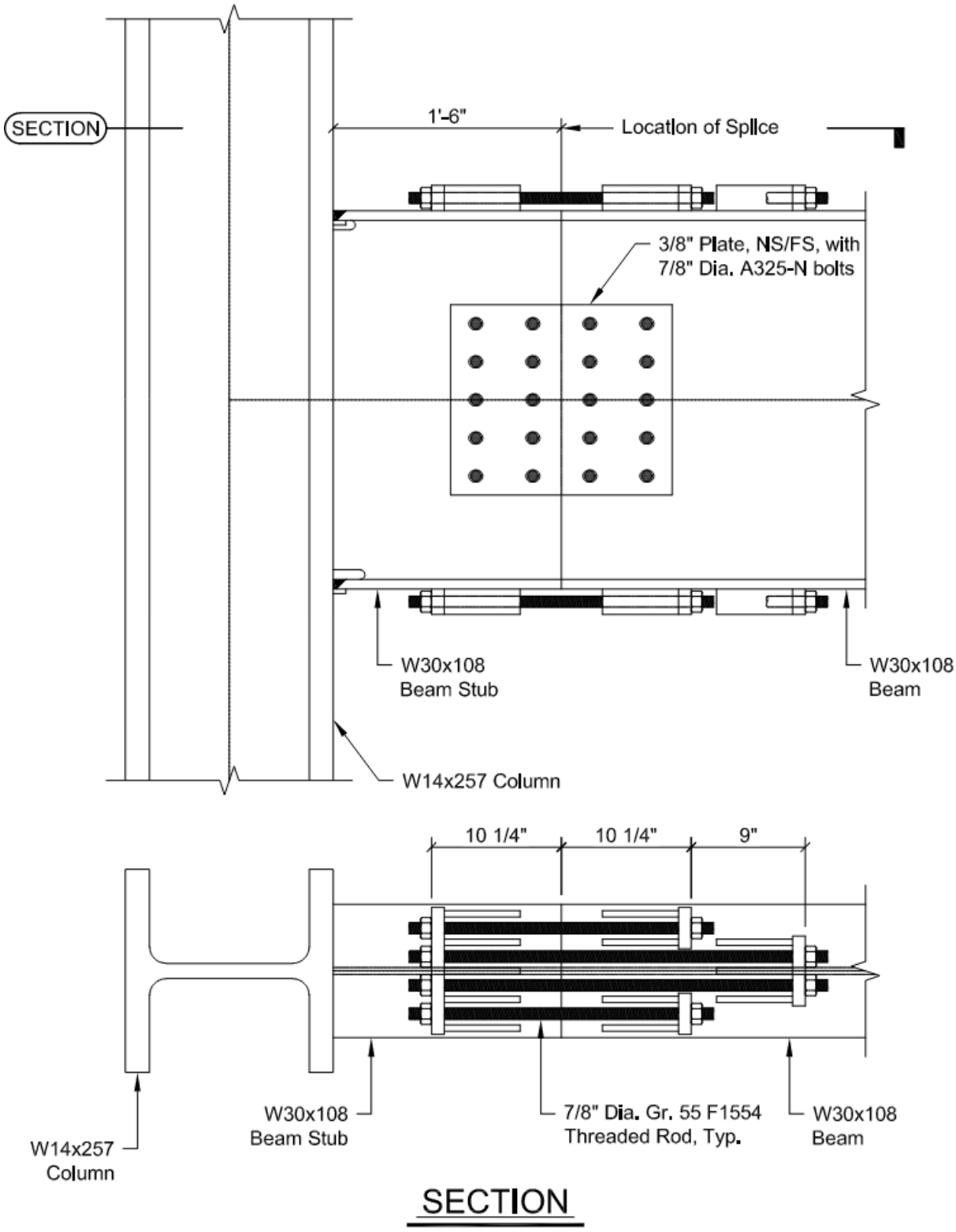

Figure B.6 – Example Problem YTR Moment Connection

APPENDIX C

BOLT COEFFICIENT CALCULATION FOR EXAMPLE PROBLEM

The calculations below follow the procedure presented in Rapid Determination of Ultimate Strength of Eccentrically Loaded Bolt Groups (Brandt, 1982).

Placing the origin at the lower left bolt, the centroid can be located by inspection.

x_o = 2.25” y_o = 6.00”

Determine J as shown below in Table C.1:

Bolt	x (in.)	y (in.)	$x-x_o^2$ (in.^{2})	$y-y_o^2$ (in.^{2})	$x^2 + y^2$ (in.^{2})
1	0	0	5.0625	36	41.0625
2	0	3	5.0625	9	14.0625
3	0	6	5.0625	0	5.0625
4	0	9	5.0625	9	14.0625
5	0	12	5.0625	36	41.0625
6	4.5	0	5.0625	36	41.0625
7	4.5	3	5.0625	9	14.0625
8	4.5	6	5.0625	0	5.0625
9	4.5	9	5.0625	9	14.0625
10	4.5	12	5.0625	36	41.0625
					Σ = J = 230.625

Table C.1 – Determination of J

Assuming a 1k unit load, determine the moment about the centroid:

$$M_o = (-1k)(2.25" + 2.25") = -4.5k - in.$$

Determine distance to instantaneous center:

$$a_{x1} = -P_y J/nM_o = -(-1k)(230.625in.^2)/(10)(-4.5k - in.) = -5.125"$$

$$a_{y1} = P_x J/nM_o = (0)(230.625in.^2)/(10)(-4.5k - in.) = 0"$$

Determine the moment about the instantaneous center:

$$M_{p1} = (-1k)(2.25" + 2.25" + 5.125") = -9.625k - in.$$

In Table C.2 below, the following equations are used:

$$\Delta = 0.34(d_i/d_{max})$$

$$R/R_{ult} = (1 - e^{-10\Delta})^{0.55}$$

$$R_x = -(d_y/d)(R/R_{ult})R_{ult}$$

$$R_y = (d_x/d)(R/R_{ult})R_{ult}$$

With $R_{ult} = -M_p/\sum M_i$

Bolt	Distances from I.C.			d^2	Δ	R/R_{ult}	M	R_x	R_y
	d_x (in.)	d_y (in.)	d (in.)	(in.^{2})	(in.)		(k-in.)	(k)	(k)
1	2.875	-6	6.65	44.3	0.238	0.948	6.31	0.130	0.062
2	2.875	-3	4.16	17.3	0.149	0.868	3.61	0.095	0.091
3	2.875	0	2.88	8.27	0.103	0.784	2.25	0	0.119
4	2.875	3	4.16	17.3	0.149	0.868	3.61	-0.095	0.091
5	2.875	6	6.65	44.3	0.238	0.948	6.31	-0.130	0.062
6	7.375	-6	9.51	90.4	0.340	0.982	9.33	0.094	0.116
7	7.375	-3	7.96	63.4	0.285	0.968	7.70	0.055	0.136
8	7.375	0	7.38	54.4	0.264	0.960	7.08	0	0.146
9	7.375	3	7.96	63.4	0.285	0.968	7.70	-0.055	0.136
10	7.375	6	9.51	90.4	0.340	0.982	9.33	-0.094	0.116
Summation:				493.3			63.2	0	1.078

Table C.2 – First Iteration of Bolt Instantaneous Center

Determine bolt coefficient:

$C_{u1} = \Sigma M_i / M_p = 63.2/9.625 = 6.57$

Determine unbalanced force:

$F_{xx1} = P_x + \Sigma R_x = 0 + 0 = 0$

$F_{yy1} = P_y + \Sigma R_y = -1 + 1.078 = 0.078k$

$F_1 = \sqrt{0^2 + 0.078k^2} = 0.078k$

Perform a second iteration.

Determine new distance to instantaneous center:

$a_{x2} = -F_{yy1} J / nM_o = -(0.078k)(230.625in.^2)/(10)(-4.5k - in.) = 0.398"$

$a_{y1} = F_{xx1} J / nM_o = (0)(230.625in.^2)/(10)(-4.5k - in.) = 0"$

Determine the new moment about the instantaneous center:

$M_{p2} = (-1k)(2.25" + 2.25" + 5.125" - 0.398") = -9.23k - in.$

In Table C.3 below, the same equations as noted above are used:

Bolt	Distances from I.C.			d^2	Δ	R/R_{ult}	M	R_x	R_y
	d_x (in.)	d_y (in.)	d (in.)	(in.^{2})	(in.)		(k-in.)	(k)	(k)
1	2.48	-6	6.49	42.1	0.240	0.949	6.16	0.134	0.055
2	2.48	-3	3.89	15.1	0.144	0.861	3.35	0.102	0.084
3	2.48	0	2.48	6.14	0.092	0.755	1.87	0	0.115
4	2.48	3	3.89	15.1	0.144	0.861	3.35	-0.102	0.084
5	2.48	6	6.49	42.1	0.240	0.949	6.16	-0.134	0.055
6	6.98	-6	9.20	84.7	0.340	0.982	9.03	0.098	0.114
7	6.98	-3	7.60	57.7	0.281	0.966	7.34	0.058	0.136
8	6.98	0	6.98	48.7	0.258	0.957	6.68	0	0.146
9	6.98	3	7.60	57.7	0.281	0.966	7.34	-0.058	0.136
10	6.98	6	9.20	84.7	0.340	0.982	9.03	-0.098	0.114
Summation:				454			60.3	0	1.04

Table C.3 – Second Iteration of Bolt Instantaneous Center

Determine bolt coefficient:

$$C_{u2} = \Sigma M_i / M_p = 60.3/9.23 = 6.53$$

Determine unbalanced force:

$$F_{xx2} = P_x + \Sigma R_x = 0 + 0 = 0$$

$$F_{yy2} = P_y + \Sigma R_y = -1 + 1.04 = 0.04k$$

$$F_2 = \sqrt{0^2 + 0.040k^2} = 0.040k$$

Predict final bolt coefficient:

$$C_u = (F_1^2 C_{u2} - F_2^2 C_{u1})/(F_1^2 - F_2^2)$$

$$C_u = [(0.078k)^2(6.53) - (0.040k)^2(6.57)]/[(0.078k)^2 - (0.040k)^2] = 6.52$$

APPENDIX D

THREADED ROD TENSION TEST DATA

The information shown below is the pertinent data collected from the threaded rod tension tests.

Instron Test Data for Threaded Rod Specimens

Specimen 1-1		Specimen 1-2		Specimen 1-3		Specimen 2-1		Specimen 2-2		Specimen 2-3	
Extension (in)	Load (lbf)	Extension (in)	Load (lbf)	Extension (in)	Load (lbf)	Extension (in)	Load (lbf)	Extension (in)	Load (lbf)	Extension (in)	Load (lbf)
0.000	1.0	0.000	-0.1	0.000	0.0	0.000	0.2	0.000	-0.1	0.000	0.1
0.000	1.1	0.000	0.0	0.000	0.1	0.000	0.2	0.000	-0.1	0.000	0.1
0.000	2.3	0.000	0.1	0.000	1.5	0.000	1.7	0.000	0.0	0.000	1.2
0.000	4.9	0.000	1.9	0.000	3.8	0.000	3.8	0.000	1.4	0.000	3.8
0.000	6.9	0.000	5.1	0.000	5.9	0.000	5.8	0.000	4.9	0.000	6.0
0.000	8.7	0.000	7.5	0.000	7.8	0.000	7.5	0.000	7.2	0.000	7.9
0.000	10.3	0.000	9.3	0.000	9.6	0.000	9.1	0.000	9.1	0.000	9.7
0.000	12.0	0.000	11.0	0.000	11.2	0.000	11.0	0.000	10.9	0.000	11.4
0.000	13.7	0.000	12.7	0.000	12.8	0.000	12.8	0.000	12.6	0.000	13.1
0.000	15.3	0.000	14.3	0.000	14.5	0.000	14.7	0.000	14.3	0.000	14.8
0.000	17.0	0.000	16.0	0.000	16.2	0.000	16.6	0.000	16.1	0.000	16.5
0.000	18.6	0.000	17.7	0.000	17.9	0.000	18.4	0.000	17.8	0.000	18.4
0.000	20.2	0.000	19.4	0.000	19.5	0.000	20.1	0.000	19.6	0.000	20.1
0.000	21.9	0.000	21.2	0.000	21.1	0.000	21.8	0.000	21.3	0.000	21.7
0.000	23.5	0.000	22.8	0.000	22.6	0.000	23.5	0.000	23.0	0.000	23.4
0.000	25.2	0.000	24.6	0.000	24.3	0.000	25.0	0.000	24.6	0.000	25.0
0.000	26.8	0.000	26.3	0.000	25.7	0.000	26.4	0.000	26.2	0.000	26.7
0.000	28.5	0.000	28.0	0.000	27.4	0.000	28.1	0.000	28.0	0.000	28.4
0.000	30.2	0.000	29.7	0.000	29.1	0.000	29.8	0.000	29.6	0.000	30.1
0.000	31.9	0.000	31.3	0.000	30.9	0.000	31.4	0.000	31.3	0.000	31.7
0.000	33.6	0.000	32.8	0.000	32.8	0.000	33.1	0.000	32.9	0.000	33.4
0.000	35.3	0.000	34.6	0.000	34.7	0.000	34.7	0.000	34.6	0.000	35.0
0.000	37.0	0.000	36.3	0.000	36.6	0.000	36.3	0.000	36.1	0.000	36.6
0.000	38.8	0.000	37.9	0.000	38.4	0.000	37.9	0.000	37.7	0.000	38.2
0.000	40.5	0.000	39.8	0.000	40.1	0.000	39.6	0.000	39.2	0.000	39.7
0.000	42.0	0.000	41.3	0.000	41.7	0.000	41.2	0.000	40.8	0.000	41.3
0.000	43.7	0.000	42.8	0.000	43.2	0.000	42.8	0.000	42.3	0.000	43.0
0.000	45.3	0.000	44.4	0.000	44.7	0.000	44.5	0.000	44.1	0.000	44.5
0.000	47.1	0.000	46.0	0.000	46.3	0.000	46.2	0.000	45.8	0.000	46.3
0.000	48.7	0.000	47.5	0.000	47.9	0.000	47.9	0.000	47.9	0.000	48.1
0.000	50.4	0.000	49.1	0.000	49.5	0.000	49.6	0.000	49.8	0.000	50.0
0.000	52.0	0.000	50.8	0.000	51.2	0.000	51.4	0.000	51.7	0.000	51.9
0.000	53.7	0.000	52.7	0.000	52.8	0.000	53.0	0.000	53.3	0.000	53.8
0.000	55.3	0.000	54.6	0.000	54.4	0.000	54.8	0.000	55.0	0.000	55.4
0.000	56.9	0.000	56.4	0.000	56.0	0.000	56.4	0.000	56.7	0.000	57.2
0.000	58.5	0.000	58.3	0.000	57.7	0.000	58.1	0.000	58.2	0.000	58.8
0.000	60.1	0.000	60.1	0.000	59.3	0.000	59.8	0.000	59.7	0.000	60.4
0.000	61.6	0.000	61.8	0.000	60.9	0.000	61.5	0.000	61.4	0.000	61.8
0.000	63.3	0.000	63.4	0.000	62.6	0.000	63.1	0.000	62.9	0.000	63.5

0.000	65.0	0.000	65.0	0.000	64.4	0.000	64.7	0.000	64.6	0.000	65.1
0.000	66.9	0.000	66.5	0.000	66.1	0.000	66.4	0.000	66.2	0.000	66.7
0.000	68.8	0.000	68.0	0.000	67.8	0.000	67.9	0.001	67.8	0.000	68.4
0.000	70.8	0.001	69.6	0.001	69.5	0.000	69.5	0.001	69.4	0.000	70.1
0.000	72.5	0.001	71.3	0.001	71.3	0.001	71.1	0.001	71.0	0.001	71.6
0.000	74.2	0.001	72.9	0.001	73.0	0.001	72.7	0.001	72.7	0.001	73.2
0.000	75.8	0.001	74.6	0.001	74.6	0.001	74.2	0.001	74.3	0.001	74.8
0.001	77.5	0.001	76.1	0.001	76.2	0.001	76.0	0.001	76.0	0.001	76.5
0.001	78.9	0.001	77.7	0.001	77.9	0.001	77.8	0.001	77.8	0.001	78.2
0.001	80.5	0.001	79.4	0.001	79.7	0.001	79.7	0.001	79.4	0.001	79.8
0.001	82.0	0.001	81.2	0.001	81.4	0.001	81.7	0.001	81.2	0.001	81.4
0.001	83.7	0.001	82.7	0.001	82.9	0.001	83.5	0.001	82.9	0.001	83.2
0.001	85.4	0.001	84.3	0.001	84.6	0.001	85.3	0.001	84.7	0.001	84.9
0.001	87.0	0.001	86.1	0.001	86.1	0.001	86.8	0.001	86.2	0.001	86.7
0.001	88.6	0.001	87.8	0.001	87.7	0.001	88.5	0.001	88.0	0.001	88.5
0.001	90.2	0.001	89.5	0.001	89.2	0.001	89.9	0.001	89.5	0.001	90.1
0.001	91.8	0.001	91.4	0.001	90.8	0.001	91.5	0.001	91.3	0.001	91.7
0.001	93.4	0.001	93.0	0.001	92.4	0.001	93.2	0.001	93.0	0.001	93.4
0.001	95.1	0.001	94.7	0.001	94.1	0.001	94.8	0.001	94.6	0.001	95.0
0.001	96.9	0.001	96.3	0.001	96.0	0.001	96.4	0.001	96.2	0.001	96.7
0.001	98.6	0.001	98.0	0.001	97.7	0.001	97.9	0.001	97.8	0.001	98.4
0.001	100.3	0.001	99.6	0.001	99.7	0.001	99.5	0.001	99.4	0.001	100.1
0.001	102.0	0.001	101.4	0.001	101.6	0.001	101.1	0.001	101.0	0.001	101.6
0.001	103.8	0.001	103.1	0.001	103.4	0.001	102.7	0.001	102.5	0.001	103.2
0.001	105.4	0.001	104.6	0.001	105.0	0.001	104.4	0.001	104.2	0.001	104.7
0.001	107.0	0.001	106.3	0.001	106.7	0.001	106.2	0.001	105.7	0.001	106.3
0.001	108.8	0.001	107.9	0.001	108.2	0.001	108.1	0.001	107.5	0.001	107.9
0.001	110.5	0.001	109.5	0.001	109.6	0.001	109.8	0.001	109.4	0.001	109.5
0.001	112.1	0.001	111.0	0.001	111.3	0.001	111.5	0.001	111.5	0.001	111.3
0.001	113.7	0.001	112.5	0.001	112.9	0.001	113.0	0.001	113.4	0.001	113.2
0.001	115.2	0.001	114.2	0.001	114.5	0.001	114.8	0.001	115.1	0.001	115.4
0.001	116.8	0.001	115.8	0.001	116.2	0.001	116.4	0.001	116.8	0.001	117.2
0.001	118.3	0.001	117.6	0.001	117.8	0.001	118.1	0.001	118.3	0.001	119.0
0.001	119.8	0.001	119.5	0.001	119.4	0.001	119.7	0.001	119.8	0.001	120.5
0.001	121.5	0.001	121.4	0.001	121.0	0.001	121.1	0.001	121.4	0.001	122.0
0.001	123.4	0.001	123.3	0.001	122.7	0.001	122.7	0.001	122.9	0.001	123.6
0.001	125.5	0.001	125.1	0.001	124.3	0.001	124.3	0.001	124.6	0.001	125.1
0.001	127.5	0.001	126.7	0.001	126.0	0.001	125.8	0.001	126.2	0.001	126.7
0.001	129.3	0.001	128.4	0.001	127.7	0.001	127.6	0.001	127.8	0.001	128.4
0.001	130.9	0.001	129.9	0.001	129.4	0.001	129.8	0.001	129.4	0.001	130.0
0.001	132.5	0.001	131.5	0.001	131.1	0.001	131.9	0.001	131.0	0.001	131.5
0.001	134.1	0.001	133.1	0.001	132.9	0.001	133.8	0.001	132.6	0.001	133.1
0.001	135.6	0.001	134.7	0.001	134.7	0.001	135.3	0.001	134.3	0.001	134.7
0.001	137.0	0.001	136.3	0.001	136.3	0.001	136.8	0.001	136.0	0.001	136.4
0.001	138.8	0.001	138.0	0.001	137.9	0.001	138.3	0.001	137.7	0.001	138.2
0.001	140.3	0.001	139.5	0.001	139.5	0.001	139.8	0.001	139.5	0.001	139.9
0.001	141.9	0.001	141.1	0.001	141.3	0.001	141.4	0.001	141.1	0.001	141.6
0.001	143.5	0.001	142.7	0.001	142.9	0.001	143.0	0.001	142.9	0.001	143.4
0.001	145.1	0.001	144.5	0.001	144.6	0.001	144.5	0.001	144.6	0.001	145.1
0.001	146.7	0.001	146.0	0.001	146.2	0.001	146.2	0.001	146.3	0.001	146.7
0.001	148.4	0.001	147.6	0.001	147.9	0.001	147.7	0.001	147.9	0.001	148.4
0.001	150.1	0.001	149.3	0.001	149.3	0.001	149.4	0.001	149.6	0.001	150.1
0.001	151.9	0.001	151.1	0.001	150.9	0.001	151.1	0.001	151.2	0.001	151.8
0.001	153.7	0.001	152.9	0.001	152.4	0.001	152.9	0.001	153.0	0.001	153.3
0.001	155.4	0.001	154.6	0.001	154.0	0.001	154.7	0.001	154.6	0.001	155.0
0.001	157.1	0.001	156.3	0.001	155.7	0.001	156.5	0.001	156.1	0.001	156.5
0.001	158.7	0.001	158.0	0.001	157.6	0.001	158.1	0.001	157.7	0.001	158.0

0.001	160.4	0.001	159.6	0.001	159.4	0.001	159.8	0.001	159.3	0.001	159.5
0.001	162.1	0.001	161.2	0.001	161.5	0.001	161.4	0.001	160.8	0.001	161.0
0.001	163.8	0.001	162.9	0.001	163.5	0.001	163.1	0.001	162.3	0.001	162.9
0.001	165.4	0.001	164.7	0.001	165.1	0.001	164.6	0.001	164.0	0.001	164.9
0.001	167.1	0.001	166.3	0.001	166.7	0.001	166.1	0.001	165.9	0.001	167.0
0.001	168.6	0.001	168.0	0.001	168.4	0.001	167.6	0.001	167.9	0.001	168.9
0.001	170.1	0.001	169.5	0.001	169.7	0.001	169.1	0.001	170.0	0.001	170.7
0.001	171.6	0.001	171.2	0.001	171.3	0.001	170.8	0.001	171.9	0.001	172.2
0.001	173.1	0.001	172.7	0.001	172.9	0.002	172.9	0.001	173.5	0.001	173.8
0.001	174.9	0.001	174.2	0.001	174.5	0.002	175.2	0.001	175.0	0.001	175.1
0.001	176.7	0.001	175.7	0.001	176.2	0.002	177.2	0.001	176.4	0.001	176.7
0.001	178.9	0.001	177.4	0.001	177.8	0.002	178.7	0.001	178.0	0.001	178.5
0.001	180.9	0.001	179.2	0.001	179.3	0.002	180.1	0.001	179.6	0.001	180.0
0.001	182.7	0.001	181.2	0.001	181.0	0.002	181.5	0.001	181.3	0.001	181.5
0.001	184.2	0.001	183.1	0.001	182.7	0.002	183.2	0.001	182.8	0.001	183.2
0.001	185.9	0.001	185.1	0.001	184.3	0.002	184.7	0.001	184.4	0.001	184.8
0.001	187.3	0.001	186.8	0.001	185.9	0.002	186.2	0.001	186.0	0.001	186.4
0.001	188.8	0.001	188.5	0.001	187.7	0.002	187.9	0.001	187.6	0.002	188.1
0.001	190.4	0.001	190.0	0.001	189.4	0.002	189.4	0.002	189.2	0.002	189.9
0.002	192.0	0.001	191.5	0.001	191.1	0.002	191.0	0.002	190.9	0.002	191.6
0.002	193.5	0.001	193.2	0.001	192.9	0.002	192.8	0.002	192.7	0.002	193.4
0.002	195.3	0.001	194.7	0.001	194.6	0.002	194.7	0.002	194.6	0.002	195.1
0.002	196.8	0.001	196.3	0.001	196.3	0.002	196.5	0.002	196.2	0.002	196.8
0.002	198.4	0.001	198.0	0.001	197.9	0.002	198.1	0.002	198.0	0.002	198.4
0.002	200.1	0.001	199.5	0.002	199.5	0.002	199.8	0.002	199.7	0.002	200.1
0.002	201.8	0.001	201.2	0.002	201.3	0.002	201.5	0.002	201.2	0.002	201.8
0.002	203.6	0.002	202.8	0.002	203.0	0.002	203.1	0.002	203.0	0.002	203.4
0.002	205.3	0.002	204.3	0.002	204.6	0.002	204.4	0.002	204.6	0.002	204.9
0.002	207.1	0.002	206.0	0.002	206.1	0.002	205.8	0.002	206.2	0.002	206.4
0.002	208.8	0.002	207.6	0.002	207.7	0.002	207.2	0.002	207.9	0.002	207.9
0.002	210.5	0.002	209.4	0.002	209.3	0.002	209.2	0.002	209.2	0.002	209.5
0.002	212.1	0.002	211.1	0.002	210.8	0.002	211.5	0.002	210.8	0.002	211.1
0.002	213.8	0.002	212.9	0.002	212.5	0.002	213.8	0.002	212.4	0.002	213.1
0.002	215.4	0.002	214.6	0.002	214.1	0.002	215.5	0.002	214.0	0.002	215.2
0.002	217.0	0.002	216.3	0.002	215.8	0.002	217.0	0.002	215.8	0.002	217.2
0.002	218.7	0.002	218.0	0.002	217.7	0.002	218.2	0.002	218.0	0.002	219.0
0.002	220.1	0.002	219.6	0.002	219.7	0.002	219.7	0.002	220.2	0.002	220.6
0.002	221.8	0.002	221.2	0.002	221.7	0.002	221.3	0.002	221.8	0.002	222.1
0.002	223.2	0.002	223.1	0.002	223.5	0.002	222.9	0.002	223.5	0.002	223.6
0.002	224.7	0.002	224.8	0.002	225.0	0.002	224.4	0.002	224.9	0.002	225.2
0.002	226.6	0.002	226.3	0.002	226.6	0.002	225.9	0.002	226.4	0.002	226.7
0.002	228.7	0.002	227.9	0.002	228.1	0.002	227.8	0.002	227.9	0.002	228.3
0.002	230.8	0.002	229.5	0.002	229.7	0.002	229.5	0.002	229.6	0.002	229.9
0.002	232.7	0.002	231.0	0.002	231.2	0.002	231.4	0.002	231.2	0.002	231.5
0.002	234.4	0.002	232.5	0.002	232.9	0.002	233.1	0.002	232.7	0.002	233.0
0.002	235.8	0.002	234.1	0.002	234.6	0.002	234.8	0.002	234.3	0.002	234.7
0.002	237.3	0.002	235.7	0.002	236.2	0.002	236.6	0.002	235.9	0.002	236.4
0.002	238.8	0.002	237.6	0.002	237.7	0.002	238.2	0.002	237.5	0.002	238.2
0.002	240.4	0.002	239.7	0.002	239.3	0.002	239.8	0.002	239.3	0.002	240.1
0.002	242.1	0.002	241.6	0.002	241.0	0.002	241.1	0.002	241.1	0.002	241.7
0.002	243.5	0.002	243.5	0.002	242.6	0.002	242.5	0.002	242.8	0.002	243.5
0.002	245.2	0.002	245.2	0.002	244.3	0.002	243.9	0.002	244.6	0.002	245.0
0.002	246.8	0.002	246.8	0.002	246.0	0.002	245.8	0.002	246.3	0.002	246.7
0.002	248.4	0.002	248.3	0.002	247.8	0.002	248.2	0.002	248.0	0.002	248.4
0.002	250.1	0.002	249.8	0.002	249.5	0.002	250.7	0.002	249.7	0.002	250.0
0.002	251.8	0.002	251.4	0.002	251.2	0.003	252.2	0.002	251.2	0.002	251.5
0.002	253.6	0.002	252.9	0.002	253.0	0.003	253.5	0.002	252.9	0.002	253.0

0.002	255.4	0.002	254.6	0.002	254.6	0.003	254.9	0.002	254.4	0.002	254.5
0.002	257.1	0.002	256.2	0.002	256.3	0.003	256.4	0.002	255.8	0.002	256.0
0.002	258.8	0.002	257.8	0.002	257.9	0.003	257.9	0.002	257.4	0.002	258.0
0.002	260.4	0.002	259.3	0.002	259.6	0.003	259.5	0.002	258.9	0.002	260.1
0.002	262.1	0.002	261.0	0.002	261.3	0.003	260.9	0.002	260.9	0.002	262.2
0.002	263.8	0.002	262.7	0.002	262.9	0.003	262.7	0.002	263.1	0.002	264.1
0.002	265.4	0.002	264.3	0.002	264.6	0.003	264.5	0.002	265.4	0.002	265.6
0.002	266.9	0.002	266.1	0.002	266.0	0.003	266.4	0.002	266.9	0.002	266.9
0.002	268.4	0.002	267.8	0.002	267.5	0.003	268.1	0.002	268.3	0.002	268.5
0.002	269.9	0.002	269.5	0.002	269.1	0.003	269.7	0.002	269.8	0.002	270.1
0.002	271.4	0.002	271.3	0.002	270.7	0.003	271.7	0.002	271.3	0.002	271.8
0.002	273.2	0.002	273.0	0.002	272.4	0.003	273.2	0.002	272.9	0.002	273.2
0.002	275.1	0.002	274.7	0.002	274.4	0.003	274.5	0.002	274.5	0.002	274.8
0.002	277.3	0.002	276.3	0.002	276.3	0.003	275.8	0.002	276.0	0.002	276.4
0.002	279.5	0.002	277.9	0.002	278.3	0.003	277.2	0.002	277.6	0.002	278.0
0.002	281.1	0.002	279.7	0.002	280.1	0.003	279.2	0.002	279.1	0.002	279.8
0.002	282.6	0.002	281.4	0.002	281.8	0.003	281.8	0.002	280.9	0.002	281.6
0.002	283.9	0.002	283.0	0.002	283.4	0.003	283.9	0.002	282.6	0.003	283.5
0.002	285.4	0.002	284.6	0.002	284.9	0.003	285.4	0.002	284.4	0.003	285.1
0.002	287.1	0.002	286.2	0.002	286.3	0.003	286.8	0.003	286.3	0.003	286.8
0.002	288.7	0.002	287.6	0.002	287.9	0.003	288.2	0.003	288.0	0.003	288.5
0.002	290.2	0.002	289.1	0.002	289.6	0.003	289.6	0.003	289.6	0.003	290.1
0.002	291.8	0.002	290.7	0.002	291.2	0.003	291.1	0.003	291.4	0.003	291.6
0.003	293.4	0.002	292.4	0.002	292.8	0.003	292.7	0.003	293.0	0.003	293.1
0.003	295.0	0.002	294.4	0.002	294.3	0.003	294.4	0.003	294.6	0.003	294.4
0.003	296.7	0.002	296.3	0.002	296.0	0.003	296.2	0.003	296.1	0.003	296.0
0.003	298.5	0.002	298.4	0.002	297.7	0.003	298.1	0.003	297.5	0.003	298.1
0.003	300.3	0.002	300.2	0.002	299.3	0.003	299.8	0.003	298.9	0.003	300.5
0.003	302.1	0.002	301.9	0.002	300.9	0.003	301.5	0.003	300.5	0.003	302.5
0.003	303.8	0.002	303.4	0.002	302.6	0.003	303.2	0.003	302.6	0.003	304.1
0.003	305.4	0.002	304.9	0.002	304.4	0.003	304.6	0.003	305.0	0.003	305.3
0.003	307.1	0.002	306.4	0.002	306.3	0.003	305.7	0.003	307.1	0.003	306.8
0.003	308.9	0.002	308.0	0.002	307.8	0.003	307.2	0.003	308.7	0.003	308.4
0.003	310.5	0.002	309.7	0.002	309.6	0.003	309.4	0.003	310.0	0.003	309.9
0.003	311.9	0.002	311.3	0.002	311.3	0.003	312.2	0.003	311.4	0.003	311.5
0.003	313.4	0.002	312.9	0.002	312.9	0.003	314.1	0.003	313.0	0.003	313.0
0.003	314.9	0.002	314.4	0.002	314.7	0.003	315.3	0.003	314.6	0.003	314.7
0.003	316.3	0.002	316.0	0.002	316.3	0.004	316.6	0.003	316.1	0.003	316.4
0.003	318.2	0.002	317.7	0.002	317.9	0.004	318.0	0.003	317.6	0.003	318.3
0.003	320.4	0.002	319.3	0.002	319.5	0.004	319.5	0.003	319.2	0.003	320.1
0.003	322.8	0.002	321.0	0.003	321.2	0.004	321.0	0.003	320.9	0.003	321.8
0.003	324.6	0.003	322.7	0.003	322.6	0.004	322.7	0.003	322.6	0.003	323.5
0.003	326.0	0.003	324.5	0.003	324.1	0.004	324.7	0.003	324.4	0.003	325.1
0.003	327.4	0.003	326.2	0.003	325.7	0.004	326.6	0.003	326.2	0.003	326.7
0.003	328.8	0.003	327.9	0.003	327.3	0.004	328.1	0.003	327.9	0.003	328.1
0.003	330.4	0.003	329.7	0.003	329.3	0.004	329.9	0.003	329.7	0.003	329.4
0.003	331.9	0.003	331.3	0.003	331.2	0.004	331.3	0.003	331.3	0.003	330.9
0.003	333.6	0.003	332.9	0.003	333.3	0.004	332.5	0.003	333.0	0.003	333.0
0.003	335.1	0.003	334.7	0.003	335.1	0.004	333.7	0.003	334.5	0.003	335.6
0.003	336.7	0.003	336.3	0.003	336.7	0.004	335.9	0.003	335.9	0.003	337.7
0.003	338.4	0.003	338.0	0.003	338.5	0.004	339.0	0.003	337.4	0.003	339.0
0.003	340.2	0.003	339.6	0.003	339.8	0.004	340.7	0.003	338.8	0.003	340.3
0.003	342.0	0.003	341.1	0.003	341.4	0.004	341.8	0.003	340.7	0.003	341.8
0.003	343.8	0.003	342.6	0.003	342.9	0.004	343.2	0.003	342.8	0.003	343.3
0.003	345.5	0.003	344.2	0.003	344.6	0.004	344.4	0.003	345.3	0.003	344.8
0.003	347.2	0.003	345.6	0.003	346.2	0.004	345.9	0.003	347.1	0.003	346.2
0.003	348.9	0.003	347.3	0.003	347.8	0.004	347.5	0.003	348.6	0.003	348.0

0.003	350.5	0.003	349.5	0.003	349.3	0.004	349.6	0.003	349.9	0.003	349.9
0.003	351.8	0.003	351.5	0.003	351.0	0.004	351.5	0.003	351.4	0.003	351.7
0.003	353.2	0.003	353.5	0.003	352.7	0.004	353.2	0.003	353.1	0.003	353.5
0.003	354.6	0.003	355.2	0.003	354.2	0.004	354.9	0.003	354.4	0.003	355.0
0.003	356.4	0.003	356.9	0.003	355.8	0.004	356.4	0.003	355.9	0.004	356.9
0.003	358.8	0.003	358.3	0.003	357.6	0.004	357.5	0.003	357.6	0.004	358.4
0.003	361.2	0.003	359.8	0.003	359.4	0.004	358.8	0.003	359.2	0.004	359.7
0.003	362.9	0.003	361.4	0.003	361.3	0.004	361.0	0.003	360.8	0.004	361.0
0.003	364.3	0.003	363.0	0.003	362.9	0.004	364.0	0.003	362.8	0.004	362.7
0.003	365.6	0.003	364.7	0.003	364.7	0.004	365.6	0.003	364.5	0.004	365.2
0.003	367.1	0.003	366.2	0.003	366.2	0.004	366.8	0.003	366.4	0.004	367.9
0.003	368.7	0.003	367.8	0.003	368.0	0.004	368.2	0.003	367.9	0.004	369.1
0.003	370.1	0.003	369.4	0.003	369.6	0.004	369.5	0.004	369.7	0.004	370.4
0.003	371.6	0.003	371.0	0.003	371.3	0.005	370.8	0.004	371.3	0.004	371.8
0.003	373.3	0.003	372.5	0.003	372.9	0.005	372.6	0.004	372.9	0.004	373.2
0.003	375.1	0.003	374.3	0.003	374.5	0.005	374.6	0.004	374.2	0.004	374.8
0.004	376.9	0.003	376.1	0.003	375.9	0.005	376.5	0.004	375.6	0.004	376.3
0.004	378.8	0.003	377.9	0.003	377.6	0.005	378.2	0.004	377.1	0.004	378.0
0.004	380.5	0.003	379.6	0.003	379.0	0.005	379.8	0.004	379.2	0.004	379.8
0.004	382.1	0.003	381.3	0.003	380.7	0.005	381.1	0.004	381.8	0.004	381.8
0.004	383.8	0.003	383.1	0.003	382.4	0.005	382.3	0.004	383.9	0.004	383.4
0.004	385.3	0.003	384.8	0.003	384.5	0.005	383.9	0.004	385.2	0.004	385.1
0.004	386.7	0.003	386.3	0.003	386.6	0.005	386.9	0.004	386.5	0.004	386.8
0.004	388.1	0.003	387.9	0.003	388.5	0.005	389.2	0.004	388.0	0.004	388.0
0.004	389.5	0.003	389.4	0.003	390.1	0.005	390.3	0.004	389.7	0.004	389.3
0.004	391.6	0.003	390.9	0.003	391.7	0.005	391.6	0.004	391.2	0.004	391.0
0.004	394.2	0.003	392.5	0.003	393.2	0.005	392.9	0.004	392.7	0.004	393.8
0.004	396.4	0.003	393.9	0.003	394.7	0.005	394.3	0.004	394.2	0.004	396.2
0.004	397.7	0.003	395.9	0.003	396.3	0.005	396.0	0.004	395.7	0.004	397.3
0.004	399.1	0.003	398.2	0.003	398.0	0.005	397.9	0.004	397.6	0.004	398.7
0.004	400.5	0.003	400.3	0.003	399.5	0.005	399.8	0.004	399.4	0.004	400.1
0.004	402.0	0.003	401.9	0.003	401.0	0.005	401.5	0.004	401.2	0.004	401.4
0.004	403.5	0.003	403.5	0.003	402.6	0.005	403.4	0.004	403.0	0.004	403.0
0.004	405.0	0.003	404.9	0.003	404.4	0.005	404.7	0.004	404.9	0.004	404.6
0.004	406.5	0.003	406.4	0.003	405.9	0.005	405.7	0.004	406.4	0.004	406.6
0.004	408.5	0.003	408.1	0.003	407.6	0.005	407.1	0.004	407.9	0.004	408.5
0.004	410.4	0.003	409.7	0.003	409.2	0.005	410.0	0.004	409.1	0.004	410.2
0.004	412.1	0.003	411.1	0.003	411.0	0.005	412.6	0.004	410.6	0.004	411.9
0.004	413.7	0.003	412.7	0.003	412.8	0.005	413.7	0.004	412.2	0.005	413.0
0.004	415.5	0.003	414.2	0.003	414.5	0.005	415.0	0.004	414.5	0.005	414.3
0.004	417.1	0.003	415.9	0.003	416.3	0.005	416.3	0.004	416.9	0.005	416.0
0.004	418.6	0.003	417.6	0.003	418.0	0.005	417.6	0.004	418.7	0.005	418.7
0.004	419.9	0.003	419.5	0.003	419.6	0.005	419.2	0.004	420.0	0.005	421.2
0.004	421.3	0.003	421.2	0.003	421.3	0.006	421.0	0.004	421.5	0.005	422.3
0.004	423.0	0.003	422.9	0.003	422.9	0.006	423.1	0.004	423.2	0.005	423.6
0.004	425.5	0.004	424.7	0.003	424.7	0.006	424.9	0.004	424.5	0.005	424.9
0.004	428.2	0.004	426.4	0.003	426.2	0.006	426.6	0.004	425.9	0.005	426.3
0.004	429.5	0.004	428.1	0.003	427.7	0.006	427.9	0.004	427.4	0.005	427.9
0.004	430.7	0.004	429.6	0.003	429.2	0.006	429.0	0.004	429.1	0.005	429.9
0.004	432.1	0.004	431.3	0.003	430.8	0.006	430.4	0.004	431.1	0.005	431.8
0.004	433.6	0.004	432.7	0.003	432.3	0.006	433.0	0.004	432.9	0.005	433.5
0.004	435.0	0.004	434.1	0.003	434.0	0.006	435.9	0.004	434.6	0.005	435.2
0.004	436.6	0.004	435.7	0.004	436.0	0.006	437.1	0.004	436.4	0.005	436.5
0.004	438.2	0.004	437.3	0.004	438.1	0.006	438.4	0.004	438.0	0.005	437.6
0.004	440.1	0.004	439.2	0.004	440.1	0.006	439.7	0.005	439.3	0.005	439.1
0.004	441.9	0.004	441.6	0.004	441.8	0.006	441.0	0.005	440.7	0.005	441.9
0.004	443.8	0.004	444.2	0.004	443.5	0.006	442.5	0.005	442.1	0.005	444.5

0.005	445.4	0.004	445.4	0.004	444.9	0.006	444.5	0.005	444.1	0.005	445.6
0.005	447.3	0.004	446.6	0.004	446.4	0.006	446.5	0.005	446.8	0.005	446.9
0.005	448.8	0.004	448.2	0.004	448.0	0.006	448.2	0.005	448.9	0.005	448.3
0.005	450.2	0.004	449.8	0.004	449.5	0.006	449.9	0.005	450.1	0.005	449.6
0.005	451.4	0.004	451.4	0.004	451.1	0.006	451.1	0.005	451.5	0.005	451.2
0.005	452.8	0.004	452.8	0.004	452.8	0.006	452.2	0.005	453.0	0.005	453.2
0.005	455.1	0.004	454.4	0.004	454.4	0.006	454.0	0.005	454.4	0.005	455.1
0.005	457.8	0.004	455.9	0.004	456.0	0.006	457.0	0.005	455.9	0.005	456.8
0.005	459.6	0.004	457.5	0.004	457.6	0.006	459.0	0.005	457.4	0.005	458.5
0.005	460.9	0.004	459.4	0.004	459.2	0.006	460.2	0.005	459.2	0.005	459.8
0.005	462.3	0.004	461.2	0.004	461.0	0.006	461.5	0.005	461.0	0.005	460.9
0.005	463.7	0.004	462.9	0.004	462.7	0.006	462.7	0.005	462.9	0.006	462.6
0.005	465.1	0.004	464.7	0.004	464.6	0.006	464.1	0.005	464.7	0.006	465.7
0.005	466.7	0.004	466.5	0.004	466.3	0.006	466.0	0.005	466.3	0.006	467.8
0.005	468.1	0.004	468.1	0.004	468.0	0.006	468.1	0.005	467.9	0.006	468.8
0.005	470.1	0.004	469.7	0.004	469.6	0.007	469.8	0.005	469.1	0.006	470.3
0.005	472.0	0.004	471.3	0.004	471.3	0.007	471.6	0.005	470.4	0.006	471.4
0.005	473.8	0.004	472.7	0.004	473.0	0.007	473.0	0.005	472.2	0.006	472.9
0.005	475.3	0.004	474.2	0.004	474.6	0.007	474.0	0.005	474.9	0.006	474.5
0.005	477.2	0.004	475.7	0.004	476.2	0.007	475.5	0.005	477.3	0.006	476.5
0.005	478.7	0.004	477.3	0.004	477.6	0.007	478.5	0.005	478.6	0.006	478.5
0.005	480.1	0.004	479.2	0.004	479.2	0.007	480.8	0.005	479.9	0.006	480.3
0.005	481.4	0.004	481.6	0.004	480.7	0.007	482.0	0.005	481.4	0.006	481.8
0.005	482.8	0.004	483.8	0.004	482.2	0.007	483.3	0.005	482.7	0.006	482.9
0.005	485.3	0.004	485.7	0.004	484.0	0.007	484.5	0.005	484.1	0.006	484.0
0.005	488.0	0.004	486.6	0.004	486.2	0.007	485.8	0.005	485.7	0.006	486.5
0.005	489.6	0.004	488.2	0.004	488.2	0.007	487.7	0.005	487.6	0.006	489.6
0.005	490.8	0.004	489.8	0.004	490.2	0.007	489.6	0.005	489.6	0.006	490.7
0.005	492.2	0.004	491.3	0.004	491.9	0.007	491.5	0.005	491.4	0.006	491.9
0.005	493.6	0.004	492.7	0.004	493.3	0.007	493.1	0.005	492.9	0.006	493.2
0.005	495.1	0.004	494.2	0.004	494.8	0.007	494.6	0.005	494.7	0.006	494.7
0.005	496.5	0.004	495.8	0.004	496.4	0.007	495.7	0.005	496.1	0.006	496.1
0.005	498.3	0.004	497.6	0.004	498.0	0.007	497.1	0.005	497.3	0.006	498.0
0.005	500.3	0.004	499.4	0.004	499.6	0.007	500.0	0.005	498.6	0.006	500.0
0.005	502.2	0.004	501.2	0.004	501.1	0.007	502.6	0.006	500.9	0.006	501.8
0.005	503.7	0.004	502.9	0.004	502.6	0.007	503.7	0.006	503.8	0.006	503.5
0.005	505.6	0.004	504.7	0.004	504.3	0.007	505.0	0.006	505.5	0.006	504.8
0.006	507.0	0.004	506.4	0.004	506.0	0.007	506.1	0.006	506.7	0.006	506.0
0.006	508.2	0.004	508.0	0.004	507.5	0.007	507.5	0.006	508.1	0.006	507.5
0.006	509.4	0.005	509.7	0.004	509.3	0.007	509.3	0.006	509.4	0.006	510.5
0.006	511.4	0.005	511.1	0.004	511.1	0.007	511.3	0.006	511.0	0.007	512.9
0.006	514.4	0.005	512.5	0.004	512.9	0.007	513.1	0.006	512.3	0.007	513.9
0.006	516.4	0.005	513.9	0.004	514.6	0.007	514.9	0.006	514.2	0.007	515.3
0.006	517.6	0.005	515.5	0.004	516.3	0.008	516.3	0.006	516.3	0.007	516.5
0.006	518.9	0.005	517.6	0.004	518.0	0.008	517.4	0.006	518.1	0.007	518.0
0.006	520.4	0.005	520.4	0.004	519.7	0.008	518.7	0.006	519.7	0.007	519.6
0.006	521.8	0.005	522.2	0.004	521.3	0.008	521.6	0.006	521.4	0.007	521.6
0.006	523.3	0.005	523.5	0.004	522.8	0.008	524.3	0.006	522.5	0.007	523.5
0.006	525.0	0.005	524.8	0.004	524.3	0.008	525.5	0.006	523.8	0.007	525.3
0.006	526.9	0.005	526.4	0.004	525.8	0.008	526.7	0.006	525.6	0.007	526.8
0.006	528.8	0.005	528.1	0.004	527.3	0.008	527.8	0.006	528.5	0.007	527.8
0.006	530.5	0.005	529.4	0.004	528.8	0.008	529.1	0.006	530.8	0.007	529.0
0.006	532.2	0.005	531.0	0.004	530.9	0.008	530.9	0.006	531.9	0.007	531.5
0.006	533.6	0.005	532.6	0.004	533.0	0.008	532.9	0.006	533.2	0.007	534.8
0.006	534.8	0.005	534.2	0.004	535.1	0.008	534.8	0.006	534.5	0.007	535.7
0.006	536.0	0.005	535.9	0.005	537.0	0.008	536.6	0.006	535.8	0.007	537.1
0.006	538.2	0.005	537.8	0.005	538.4	0.008	538.1	0.006	537.4	0.007	538.3

0.006	541.3	0.005	539.6	0.005	539.9	0.008	539.1	0.006	539.2	0.007	539.6
0.006	543.1	0.005	541.5	0.005	541.4	0.008	540.5	0.006	541.1	0.007	541.2
0.006	544.2	0.005	542.9	0.005	542.9	0.008	543.4	0.006	543.0	0.007	543.1
0.006	545.6	0.005	544.7	0.005	544.7	0.008	546.0	0.006	544.6	0.007	545.1
0.006	546.8	0.005	546.4	0.005	546.2	0.008	546.9	0.006	546.2	0.007	546.9
0.006	548.4	0.005	547.8	0.005	547.7	0.008	548.3	0.006	547.4	0.007	548.6
0.006	549.8	0.005	549.2	0.005	549.3	0.008	549.4	0.006	548.6	0.007	549.7
0.006	551.8	0.005	550.7	0.005	550.9	0.008	550.9	0.006	550.8	0.007	550.9
0.006	553.7	0.005	552.2	0.005	552.5	0.008	552.6	0.007	553.9	0.007	552.9
0.006	555.5	0.005	554.2	0.005	554.3	0.008	554.6	0.007	555.6	0.007	556.0
0.006	557.3	0.005	556.8	0.005	556.2	0.008	556.5	0.007	556.8	0.007	557.6
0.006	558.8	0.005	558.8	0.005	557.9	0.008	558.1	0.007	558.1	0.008	558.9
0.006	559.8	0.005	560.3	0.005	559.6	0.008	559.6	0.007	559.3	0.008	560.2
0.007	561.0	0.005	561.6	0.005	561.3	0.008	560.6	0.007	560.7	0.008	561.4
0.007	563.2	0.005	563.0	0.005	563.1	0.009	562.2	0.007	562.5	0.008	562.9
0.007	566.4	0.005	564.7	0.005	564.8	0.009	565.5	0.007	564.5	0.008	564.7
0.007	567.9	0.005	566.1	0.005	566.2	0.009	567.4	0.007	566.3	0.008	566.8
0.007	569.0	0.005	567.6	0.005	567.8	0.009	568.5	0.007	568.1	0.008	568.4
0.007	570.5	0.005	569.3	0.005	569.2	0.009	569.9	0.007	569.6	0.008	570.2
0.007	571.8	0.005	571.0	0.005	570.7	0.009	571.1	0.007	570.7	0.008	571.4
0.007	573.2	0.005	572.6	0.005	572.3	0.009	572.5	0.007	571.9	0.008	572.6
0.007	574.9	0.005	574.5	0.005	574.2	0.009	574.4	0.007	574.1	0.008	574.1
0.007	576.9	0.005	576.3	0.005	576.3	0.009	576.4	0.007	577.2	0.008	577.2
0.007	578.8	0.005	578.0	0.005	578.5	0.009	578.0	0.007	578.6	0.008	579.4
0.007	580.6	0.005	579.6	0.005	580.2	0.009	579.7	0.007	579.9	0.008	580.6
0.007	582.1	0.005	581.4	0.005	581.7	0.009	581.0	0.007	581.1	0.008	582.0
0.007	583.1	0.005	582.9	0.005	583.1	0.009	582.2	0.007	582.5	0.008	583.1
0.007	584.3	0.005	584.4	0.005	584.7	0.009	584.1	0.007	584.2	0.008	584.5
0.007	586.9	0.005	585.8	0.005	586.4	0.009	587.4	0.007	585.9	0.008	586.3
0.007	589.9	0.006	587.3	0.005	587.8	0.009	589.1	0.007	587.9	0.008	588.3
0.007	591.1	0.006	588.9	0.005	589.4	0.009	590.2	0.007	589.7	0.008	590.2
0.007	592.4	0.006	591.0	0.005	590.9	0.009	591.4	0.007	591.3	0.008	592.0
0.007	593.6	0.006	593.9	0.005	592.6	0.009	592.7	0.007	592.6	0.008	593.4
0.007	595.0	0.006	595.4	0.005	594.1	0.009	594.2	0.007	593.8	0.008	594.4
0.007	596.5	0.006	596.8	0.005	595.9	0.009	596.1	0.007	595.3	0.008	595.8
0.007	598.5	0.006	598.3	0.005	597.7	0.009	598.1	0.007	598.4	0.008	598.4
0.007	600.5	0.006	599.8	0.005	599.5	0.009	599.7	0.007	600.7	0.008	601.4
0.007	602.1	0.006	601.3	0.005	601.3	0.009	601.5	0.008	601.8	0.008	602.4
0.007	603.7	0.006	602.7	0.005	602.9	0.009	602.7	0.008	603.1	0.008	603.8
0.007	604.9	0.006	604.3	0.005	604.6	0.009	603.7	0.008	604.4	0.008	604.8
0.007	606.0	0.006	605.9	0.005	606.3	0.009	605.7	0.008	605.8	0.009	606.3
0.007	608.2	0.006	607.7	0.005	607.8	0.010	609.1	0.008	607.6	0.009	607.9
0.008	611.6	0.006	609.5	0.005	609.3	0.010	610.5	0.008	609.5	0.009	609.9
0.008	612.9	0.006	611.3	0.005	610.7	0.010	611.8	0.008	611.2	0.009	611.9
0.008	614.1	0.006	613.0	0.005	612.2	0.010	612.9	0.008	613.0	0.009	613.5
0.008	615.4	0.006	614.7	0.005	613.9	0.010	614.3	0.008	614.6	0.009	615.2
0.008	616.6	0.006	616.3	0.005	615.9	0.010	615.8	0.008	615.6	0.009	616.2
0.008	618.2	0.006	618.1	0.005	618.5	0.010	617.8	0.008	616.9	0.009	617.3
0.008	620.0	0.006	619.4	0.005	620.4	0.010	619.8	0.008	619.3	0.009	619.5
0.008	622.1	0.006	620.9	0.005	621.9	0.010	621.5	0.008	622.4	0.009	622.8
0.008	623.8	0.006	622.2	0.005	623.2	0.010	623.1	0.008	623.6	0.009	624.0
0.008	625.5	0.006	623.8	0.006	624.8	0.010	624.2	0.008	624.9	0.009	625.3
0.008	626.6	0.006	626.0	0.006	626.5	0.010	625.3	0.008	626.0	0.009	626.6
0.008	627.8	0.006	628.6	0.006	627.9	0.010	627.6	0.008	627.5	0.009	628.0
0.008	629.6	0.006	630.5	0.006	629.3	0.010	630.8	0.008	629.0	0.009	629.5
0.008	633.1	0.006	631.8	0.006	631.0	0.010	632.1	0.008	631.0	0.009	631.5
0.008	634.7	0.006	633.2	0.006	632.5	0.010	633.5	0.008	633.0	0.009	633.5

0.008	635.8	0.006	634.8	0.006	634.2	0.010	634.7	0.008	634.7	0.009	635.2
0.008	637.0	0.006	636.2	0.006	636.0	0.010	636.1	0.008	636.3	0.009	636.8
0.008	638.4	0.006	637.7	0.006	637.7	0.010	637.7	0.008	637.6	0.009	637.9
0.008	639.8	0.006	639.3	0.006	639.6	0.010	639.5	0.008	638.8	0.009	639.1
0.008	641.6	0.006	640.9	0.006	641.3	0.010	641.5	0.008	640.6	0.009	641.2
0.008	643.8	0.006	642.6	0.006	643.0	0.010	643.2	0.008	643.8	0.009	644.5
0.008	645.5	0.006	644.4	0.006	644.7	0.010	644.7	0.008	645.5	0.009	645.7
0.008	647.2	0.006	646.3	0.006	646.2	0.010	645.8	0.008	646.6	0.009	647.1
0.008	648.5	0.006	648.0	0.006	647.7	0.010	646.9	0.008	647.9	0.009	648.3
0.008	649.5	0.006	649.6	0.006	649.1	0.010	649.4	0.009	649.2	0.009	649.6
0.008	651.1	0.006	651.3	0.006	650.6	0.010	652.6	0.009	650.7	0.009	651.1
0.008	654.5	0.006	652.9	0.006	652.2	0.011	653.9	0.009	652.5	0.010	653.2
0.008	656.4	0.006	654.3	0.006	654.3	0.011	655.2	0.009	654.7	0.010	655.1
0.009	657.4	0.006	655.7	0.006	656.8	0.011	656.3	0.009	656.3	0.010	656.8
0.009	658.8	0.006	657.1	0.006	658.8	0.011	657.5	0.009	658.0	0.010	658.3
0.009	660.1	0.006	659.1	0.006	660.2	0.011	659.3	0.009	659.2	0.010	659.3
0.009	661.5	0.007	661.7	0.006	661.6	0.011	661.3	0.009	660.3	0.010	660.7
0.009	663.4	0.007	663.9	0.006	663.1	0.011	663.2	0.009	662.3	0.010	663.9
0.009	665.5	0.007	665.4	0.006	664.7	0.011	664.9	0.009	665.7	0.010	666.3
0.009	667.2	0.007	666.6	0.006	666.1	0.011	666.3	0.009	667.1	0.010	667.3
0.009	668.8	0.007	668.1	0.006	667.6	0.011	667.4	0.009	668.3	0.010	668.5
0.009	670.0	0.007	669.7	0.006	669.2	0.011	668.7	0.009	669.5	0.010	669.7
0.009	671.1	0.007	671.1	0.006	670.8	0.011	671.8	0.009	670.8	0.010	671.2
0.009	673.0	0.007	672.6	0.006	672.6	0.011	674.3	0.009	672.4	0.010	673.1
0.009	676.6	0.007	674.1	0.006	674.4	0.011	675.2	0.009	674.4	0.010	675.1
0.009	677.9	0.007	676.0	0.006	676.2	0.011	676.4	0.009	676.4	0.010	676.8
0.009	679.1	0.007	677.7	0.006	678.0	0.011	677.7	0.009	678.0	0.010	678.5
0.009	680.2	0.007	679.7	0.006	679.5	0.011	679.2	0.009	679.7	0.010	679.6
0.009	681.6	0.007	681.4	0.006	681.4	0.011	681.2	0.009	680.7	0.010	680.6
0.009	683.2	0.007	683.0	0.006	683.0	0.011	683.1	0.009	681.8	0.010	682.9
0.009	685.2	0.007	684.7	0.006	684.4	0.011	684.8	0.009	684.3	0.010	686.3
0.009	687.1	0.007	686.2	0.006	685.8	0.011	686.5	0.009	687.5	0.010	687.3
0.009	688.8	0.007	687.6	0.006	687.2	0.011	687.4	0.009	688.5	0.010	688.7
0.009	690.2	0.007	689.0	0.006	688.9	0.011	688.7	0.009	689.8	0.010	689.9
0.009	691.4	0.007	690.5	0.006	691.1	0.011	691.7	0.009	691.0	0.010	691.3
0.009	692.6	0.007	692.5	0.006	693.7	0.011	694.2	0.009	692.3	0.010	692.9
0.009	695.9	0.007	695.1	0.006	695.4	0.011	695.2	0.010	694.1	0.010	695.1
0.009	698.4	0.007	697.3	0.006	696.6	0.012	696.4	0.010	696.1	0.011	696.8
0.009	699.2	0.007	698.6	0.006	698.2	0.012	697.8	0.010	698.1	0.011	698.5
0.010	700.4	0.007	699.8	0.006	699.7	0.012	699.2	0.010	699.8	0.011	699.8
0.010	701.7	0.007	701.4	0.006	701.2	0.012	701.2	0.010	701.3	0.011	700.9
0.010	703.2	0.007	702.8	0.007	702.6	0.012	703.1	0.010	702.3	0.011	702.5
0.010	705.2	0.007	704.3	0.007	704.2	0.012	704.9	0.010	703.5	0.011	705.8
0.010	707.1	0.007	705.8	0.007	705.8	0.012	706.4	0.010	706.2	0.011	707.8
0.010	708.9	0.007	707.5	0.007	707.5	0.012	707.4	0.010	709.1	0.011	708.9
0.010	710.4	0.007	709.4	0.007	709.4	0.012	708.7	0.010	710.2	0.011	710.0
0.010	711.4	0.007	711.2	0.007	711.2	0.012	711.8	0.010	711.4	0.011	711.3
0.010	712.6	0.007	713.1	0.007	713.0	0.012	714.4	0.010	712.6	0.011	713.0
0.010	715.5	0.007	714.5	0.007	714.6	0.012	715.2	0.010	714.1	0.011	714.9
0.010	718.3	0.007	716.4	0.007	716.2	0.012	716.4	0.010	715.9	0.011	716.7
0.010	719.2	0.007	718.0	0.007	717.9	0.012	717.7	0.010	717.9	0.011	718.5
0.010	720.4	0.007	719.4	0.007	719.2	0.012	719.2	0.010	719.5	0.011	719.9
0.010	721.7	0.007	720.8	0.007	720.7	0.012	721.2	0.010	721.4	0.011	721.0
0.010	723.2	0.007	722.2	0.007	722.1	0.012	723.2	0.010	722.6	0.011	722.4
0.010	725.1	0.007	724.0	0.007	724.0	0.012	725.0	0.010	723.6	0.011	725.7
0.010	727.1	0.007	726.6	0.007	726.7	0.012	726.4	0.010	725.5	0.011	728.0
0.010	728.7	0.007	728.8	0.007	728.9	0.012	727.4	0.010	729.0	0.011	728.9

0.010	730.3	0.008	730.3	0.007	730.3	0.012	728.6	0.010	730.5	0.011	730.1
0.010	731.4	0.008	731.6	0.007	731.6	0.012	731.6	0.010	731.7	0.011	731.4
0.010	732.5	0.008	733.1	0.007	733.0	0.012	734.3	0.010	732.8	0.011	732.8
0.010	735.8	0.008	734.6	0.007	734.4	0.012	735.3	0.010	734.2	0.011	734.8
0.010	738.3	0.008	736.0	0.007	735.9	0.012	736.5	0.010	735.8	0.011	736.9
0.010	739.3	0.008	737.6	0.007	737.6	0.012	737.8	0.010	737.7	0.011	738.6
0.010	740.6	0.008	739.2	0.007	739.1	0.013	739.3	0.011	739.6	0.012	740.1
0.010	741.7	0.008	741.1	0.007	741.1	0.013	741.1	0.011	741.4	0.012	741.1
0.011	743.2	0.008	742.9	0.007	742.9	0.013	743.2	0.011	742.9	0.012	742.4
0.011	745.1	0.008	744.8	0.007	744.7	0.013	744.9	0.011	744.0	0.012	745.2
0.011	747.1	0.008	746.3	0.007	746.2	0.013	746.6	0.011	745.2	0.012	747.9
0.011	748.8	0.008	748.1	0.007	747.9	0.013	747.4	0.011	747.6	0.012	748.9
0.011	750.3	0.008	749.6	0.007	749.5	0.013	748.6	0.011	750.8	0.012	750.3
0.011	751.3	0.008	751.0	0.007	751.0	0.013	751.5	0.011	751.8	0.012	751.4
0.011	752.7	0.008	752.3	0.007	752.3	0.013	754.3	0.011	753.2	0.012	752.9
0.011	755.9	0.008	753.7	0.007	753.7	0.013	755.4	0.011	754.3	0.012	754.8
0.011	758.4	0.008	755.9	0.007	755.9	0.013	756.6	0.011	755.7	0.012	756.8
0.011	759.2	0.008	758.5	0.007	758.6	0.013	757.8	0.011	757.5	0.012	758.5
0.011	760.5	0.008	760.6	0.007	760.8	0.013	759.3	0.011	759.5	0.012	760.1
0.011	761.7	0.008	761.7	0.007	761.8	0.013	761.1	0.011	761.3	0.012	761.2
0.011	763.1	0.008	763.1	0.007	763.2	0.013	763.2	0.011	763.1	0.012	762.4
0.011	765.1	0.008	764.7	0.007	764.7	0.013	764.9	0.011	764.5	0.012	764.5
0.011	767.1	0.008	766.2	0.007	766.0	0.013	766.4	0.011	765.6	0.012	767.9
0.011	768.8	0.008	767.7	0.007	767.6	0.013	767.4	0.011	766.9	0.012	769.2
0.011	770.4	0.008	769.2	0.007	769.2	0.013	768.7	0.011	769.6	0.012	770.5
0.011	771.4	0.008	770.9	0.008	770.9	0.013	771.7	0.011	772.6	0.012	771.6
0.011	772.6	0.008	772.8	0.008	772.7	0.013	774.3	0.011	773.4	0.012	773.0
0.011	775.7	0.008	774.7	0.008	774.5	0.013	775.3	0.011	774.8	0.012	774.7
0.011	778.3	0.008	776.3	0.008	776.4	0.013	776.5	0.011	776.0	0.012	776.7
0.011	779.3	0.008	778.0	0.008	777.9	0.013	777.7	0.011	777.3	0.012	778.5
0.011	780.5	0.008	779.7	0.008	779.7	0.013	779.2	0.011	779.1	0.012	780.2
0.011	781.8	0.008	781.1	0.008	781.2	0.014	781.3	0.011	781.1	0.012	781.6
0.011	783.1	0.008	782.3	0.008	782.5	0.014	783.2	0.011	783.0	0.012	782.6
0.011	785.0	0.008	783.7	0.008	783.9	0.014	784.9	0.012	784.7	0.013	784.2
0.012	787.1	0.008	785.9	0.008	785.3	0.014	786.4	0.012	786.1	0.013	787.3
0.012	788.8	0.008	788.8	0.008	787.5	0.014	787.3	0.012	787.2	0.013	789.4
0.012	790.5	0.008	790.6	0.008	790.4	0.014	788.8	0.012	788.7	0.013	790.5
0.012	791.5	0.008	791.7	0.008	792.2	0.014	792.1	0.012	791.6	0.013	791.7
0.012	792.6	0.008	793.1	0.008	793.3	0.014	794.2	0.012	794.2	0.013	793.0
0.012	794.9	0.009	794.6	0.008	794.7	0.014	795.1	0.012	795.2	0.013	794.5
0.012	798.5	0.009	796.0	0.008	796.3	0.014	796.3	0.012	796.4	0.013	796.5
0.012	799.5	0.009	797.5	0.008	797.7	0.014	797.6	0.012	797.6	0.013	798.5
0.012	800.7	0.009	799.1	0.008	799.3	0.014	799.1	0.012	798.9	0.013	800.3
0.012	802.0	0.009	801.1	0.008	800.9	0.014	801.2	0.012	800.8	0.013	801.9
0.012	803.3	0.009	803.0	0.008	802.6	0.014	803.2	0.012	802.9	0.013	802.9
0.012	805.1	0.009	804.7	0.008	804.4	0.014	805.0	0.012	804.5	0.013	803.9
0.012	807.0	0.009	806.4	0.008	806.3	0.014	806.3	0.012	806.5	0.013	806.5
0.012	808.7	0.009	808.1	0.008	808.0	0.014	807.3	0.012	807.8	0.013	809.7
0.012	810.6	0.009	809.6	0.008	809.6	0.014	808.9	0.012	808.9	0.013	810.7
0.012	812.0	0.009	810.7	0.008	811.2	0.014	812.2	0.012	810.4	0.013	811.9
0.012	812.9	0.009	812.0	0.008	812.6	0.014	814.0	0.012	813.4	0.013	813.1
0.012	814.5	0.009	814.0	0.008	814.0	0.014	815.1	0.012	815.7	0.013	814.5
0.012	818.0	0.009	817.0	0.008	815.3	0.014	816.3	0.012	816.7	0.013	816.4
0.012	819.8	0.009	819.0	0.008	817.6	0.014	817.6	0.012	818.1	0.013	818.5
0.012	820.7	0.009	820.1	0.008	820.3	0.014	819.2	0.012	819.2	0.013	820.1
0.012	822.0	0.009	821.4	0.008	822.2	0.014	821.3	0.012	820.6	0.013	821.9
0.012	823.2	0.009	822.9	0.008	823.4	0.014	823.1	0.012	822.5	0.013	823.1

0.012	824.8	0.009	824.3	0.008	824.8	0.015	824.8	0.012	824.6	0.013	824.1
0.012	826.8	0.009	825.7	0.008	826.3	0.015	826.4	0.012	826.3	0.013	825.9
0.012	828.8	0.009	827.7	0.008	827.8	0.015	827.3	0.012	828.2	0.014	829.3
0.013	830.6	0.009	829.5	0.008	829.2	0.015	828.8	0.012	829.5	0.014	831.1
0.013	832.1	0.009	831.5	0.008	830.9	0.015	832.3	0.013	830.5	0.014	832.1
0.013	833.2	0.009	833.0	0.008	832.7	0.015	834.0	0.013	832.0	0.014	833.4
0.013	833.9	0.009	834.8	0.009	834.6	0.015	835.1	0.013	835.1	0.014	834.8
0.013	838.2	0.009	836.4	0.009	836.3	0.015	836.3	0.013	837.4	0.014	836.2
0.013	839.7	0.009	837.6	0.009	837.9	0.015	837.6	0.013	838.3	0.014	838.2
0.013	840.8	0.009	838.8	0.009	839.6	0.015	839.2	0.013	839.7	0.014	840.2
0.013	842.0	0.009	840.5	0.009	840.9	0.015	841.2	0.013	841.0	0.014	841.9
0.013	843.3	0.009	843.2	0.009	842.2	0.015	843.0	0.013	842.4	0.014	843.4
0.013	844.9	0.009	845.8	0.009	843.6	0.015	845.0	0.013	844.1	0.014	844.5
0.013	846.8	0.009	847.0	0.009	846.0	0.015	846.3	0.013	846.2	0.014	845.6
0.013	848.8	0.009	848.3	0.009	849.0	0.015	847.2	0.013	848.1	0.014	848.2
0.013	850.7	0.009	849.8	0.009	850.6	0.015	848.8	0.013	849.7	0.014	851.2
0.013	852.1	0.009	851.0	0.009	851.7	0.015	852.3	0.013	851.1	0.014	852.3
0.013	853.1	0.009	852.6	0.009	853.1	0.015	854.1	0.013	852.2	0.014	853.6
0.013	854.3	0.010	854.2	0.009	854.4	0.015	855.1	0.013	853.5	0.014	854.8
0.013	856.9	0.010	856.0	0.009	855.8	0.015	856.3	0.013	856.5	0.014	856.2
0.013	860.1	0.010	857.9	0.009	857.4	0.015	857.7	0.013	859.0	0.014	858.0
0.013	861.0	0.010	859.8	0.009	859.3	0.015	859.2	0.013	860.2	0.014	860.0
0.013	862.3	0.010	861.4	0.009	861.3	0.015	861.2	0.013	861.6	0.014	861.7
0.013	863.5	0.010	863.0	0.009	862.9	0.015	863.2	0.013	862.7	0.014	863.6
0.013	864.9	0.010	864.5	0.009	864.7	0.015	865.0	0.013	864.2	0.014	864.9
0.013	866.6	0.010	865.8	0.009	866.2	0.015	866.4	0.013	865.7	0.014	866.0
0.013	868.6	0.010	867.0	0.009	867.6	0.016	867.4	0.013	867.6	0.014	867.5
0.013	870.4	0.010	869.2	0.009	868.8	0.016	868.7	0.013	869.6	0.014	870.7
0.013	872.2	0.010	872.1	0.009	870.5	0.016	871.8	0.013	871.5	0.014	872.8
0.013	873.7	0.010	874.0	0.009	873.3	0.016	874.3	0.013	873.0	0.015	873.8
0.014	874.7	0.010	875.0	0.009	875.6	0.016	875.3	0.013	874.0	0.015	875.1
0.014	876.0	0.010	876.5	0.009	876.9	0.016	876.6	0.013	875.1	0.015	876.3
0.014	878.9	0.010	878.0	0.009	878.2	0.016	877.8	0.014	877.7	0.015	877.8
0.014	881.7	0.010	879.3	0.009	879.4	0.016	879.3	0.014	880.8	0.015	879.9
0.014	882.7	0.010	880.8	0.009	880.9	0.016	881.1	0.014	881.9	0.015	881.8
0.014	884.0	0.010	882.6	0.009	882.4	0.016	883.2	0.014	883.3	0.015	883.5
0.014	885.1	0.010	884.5	0.009	884.3	0.016	884.9	0.014	884.5	0.015	885.3
0.014	886.4	0.010	886.4	0.009	886.2	0.016	886.5	0.014	885.9	0.015	886.3
0.014	888.4	0.010	887.9	0.009	887.9	0.016	887.6	0.014	887.2	0.015	887.4
0.014	890.4	0.010	889.7	0.009	889.6	0.016	888.6	0.014	889.2	0.015	889.6
0.014	892.0	0.010	891.4	0.010	891.2	0.016	891.3	0.014	891.3	0.015	892.8
0.014	894.0	0.010	892.7	0.010	892.4	0.016	894.3	0.014	893.1	0.015	894.2
0.014	895.3	0.010	893.9	0.010	893.7	0.016	895.3	0.014	894.7	0.015	895.4
0.014	896.4	0.010	895.4	0.010	895.5	0.016	896.7	0.014	895.8	0.015	896.6
0.014	897.8	0.010	898.0	0.010	898.5	0.016	897.8	0.014	897.0	0.015	898.0
0.014	900.9	0.010	900.7	0.010	900.7	0.016	899.1	0.014	899.1	0.015	899.5
0.014	903.3	0.010	902.1	0.010	901.7	0.016	900.9	0.014	902.2	0.015	901.6
0.014	904.2	0.010	903.2	0.010	903.1	0.016	903.0	0.014	903.7	0.015	903.4
0.014	905.6	0.010	904.6	0.010	904.5	0.016	904.9	0.014	905.0	0.015	905.2
0.014	906.7	0.010	906.1	0.010	905.9	0.016	906.6	0.014	906.4	0.015	906.8
0.014	908.1	0.010	907.5	0.010	907.5	0.016	907.8	0.014	907.6	0.015	907.8
0.014	909.9	0.010	909.1	0.010	909.3	0.016	908.8	0.014	909.0	0.015	909.1
0.014	912.0	0.010	910.9	0.010	911.2	0.017	910.9	0.014	910.9	0.015	911.6
0.014	913.9	0.011	912.9	0.010	913.0	0.017	914.1	0.014	912.8	0.015	914.7
0.014	915.6	0.011	914.8	0.010	914.8	0.017	915.5	0.014	914.6	0.015	915.6
0.014	917.1	0.011	916.3	0.010	916.2	0.017	916.8	0.014	916.3	0.015	916.9
0.014	918.0	0.011	918.1	0.010	917.4	0.017	918.1	0.014	917.7	0.016	918.2

0.014	919.4	0.011	919.6	0.010	918.5	0.017	919.3	0.014	918.8	0.016	919.5
0.015	922.5	0.011	920.7	0.010	920.8	0.017	920.8	0.014	920.2	0.016	921.3
0.015	924.9	0.011	922.0	0.010	923.9	0.017	922.9	0.014	923.2	0.016	923.3
0.015	925.9	0.011	924.0	0.010	925.6	0.017	924.8	0.014	925.8	0.016	925.1
0.015	927.2	0.011	927.0	0.010	926.6	0.017	926.5	0.015	926.9	0.016	927.0
0.015	928.5	0.011	928.9	0.010	928.0	0.017	928.0	0.015	928.2	0.016	928.3
0.015	929.8	0.011	930.2	0.010	929.2	0.017	929.1	0.015	929.4	0.016	929.3
0.015	931.6	0.011	931.5	0.010	930.7	0.017	930.3	0.015	930.8	0.016	930.7
0.015	933.5	0.011	932.9	0.010	932.6	0.017	933.2	0.015	932.4	0.016	933.9
0.015	935.3	0.011	934.3	0.010	934.4	0.017	936.0	0.015	934.3	0.016	936.3
0.015	937.2	0.011	935.8	0.010	936.3	0.017	937.0	0.015	936.3	0.016	937.2
0.015	938.6	0.011	937.4	0.010	938.0	0.017	938.4	0.015	938.0	0.016	938.5
0.015	939.8	0.011	939.4	0.010	939.8	0.017	939.5	0.015	939.8	0.016	939.8
0.015	941.0	0.011	941.3	0.010	941.1	0.017	940.8	0.015	940.8	0.016	941.3
0.015	943.7	0.011	942.8	0.011	942.2	0.017	942.6	0.015	941.9	0.016	943.0
0.015	946.7	0.011	944.7	0.011	943.6	0.017	944.6	0.015	944.0	0.016	945.1
0.015	947.7	0.011	946.3	0.011	946.4	0.017	946.4	0.015	947.4	0.016	946.9
0.015	949.0	0.011	947.6	0.011	949.2	0.017	948.2	0.015	948.8	0.016	948.6
0.015	950.1	0.011	948.8	0.011	950.1	0.017	949.5	0.015	950.0	0.016	949.8
0.015	951.5	0.011	950.5	0.011	951.5	0.017	950.5	0.015	951.4	0.016	950.9
0.015	953.1	0.011	953.2	0.011	952.8	0.017	952.4	0.015	952.5	0.016	952.6
0.015	955.2	0.011	955.8	0.011	954.3	0.017	955.9	0.015	954.0	0.016	955.7
0.015	957.2	0.011	957.0	0.011	955.7	0.018	957.3	0.015	955.8	0.016	957.7
0.015	959.0	0.011	958.3	0.011	957.6	0.018	958.5	0.015	957.8	0.016	958.8
0.015	960.5	0.011	959.5	0.011	959.6	0.018	959.8	0.015	959.6	0.016	960.1
0.015	961.6	0.011	960.8	0.011	961.2	0.018	961.0	0.015	961.5	0.016	961.4
0.015	962.6	0.011	962.5	0.011	963.1	0.018	962.5	0.015	962.9	0.017	962.9
0.015	965.0	0.011	964.3	0.011	964.6	0.018	964.5	0.015	963.9	0.017	964.8
0.015	968.3	0.011	966.3	0.011	965.6	0.018	966.5	0.015	965.2	0.017	966.8
0.016	969.6	0.011	968.0	0.011	966.7	0.018	968.1	0.015	968.2	0.017	968.4
0.016	970.7	0.012	969.8	0.011	969.2	0.018	969.9	0.015	970.7	0.017	970.2
0.016	972.1	0.012	971.5	0.011	972.3	0.018	970.8	0.015	971.8	0.017	971.4
0.016	973.4	0.012	972.8	0.011	973.6	0.018	971.9	0.015	973.3	0.017	972.4
0.016	974.9	0.012	973.9	0.011	974.9	0.018	974.6	0.016	974.4	0.017	974.3
0.016	976.7	0.012	975.5	0.011	976.3	0.018	977.8	0.016	975.8	0.017	977.7
0.016	978.7	0.012	978.1	0.011	977.6	0.018	978.7	0.016	977.3	0.017	979.3
0.016	980.4	0.012	980.6	0.011	979.1	0.018	980.1	0.016	979.3	0.017	980.4
0.016	982.2	0.012	981.9	0.011	980.9	0.018	981.2	0.016	981.3	0.017	981.7
0.016	983.4	0.012	983.2	0.011	983.0	0.018	982.7	0.016	983.0	0.017	983.0
0.016	984.4	0.012	984.6	0.011	984.6	0.018	984.3	0.016	984.6	0.017	984.5
0.016	986.1	0.012	986.0	0.011	986.4	0.018	986.3	0.016	985.9	0.017	986.4
0.016	989.5	0.012	987.5	0.011	987.8	0.018	988.3	0.016	986.9	0.017	988.4
0.016	991.6	0.012	989.2	0.011	989.0	0.018	989.9	0.016	988.8	0.017	990.2
0.016	992.6	0.012	991.1	0.011	990.2	0.018	991.4	0.016	992.3	0.017	991.8
0.016	993.9	0.012	993.0	0.012	992.7	0.018	992.5	0.016	993.8	0.017	993.1
0.016	995.1	0.012	994.7	0.012	995.7	0.018	993.6	0.016	995.1	0.017	994.2
0.016	996.6	0.012	996.4	0.012	997.0	0.018	996.6	0.016	996.4	0.017	996.0
0.016	998.3	0.012	997.9	0.012	998.2	0.018	999.4	0.016	997.6	0.017	999.3
0.016	1000.3	0.012	999.1	0.012	999.4	0.018	1000.3	0.016	999.1	0.017	1001.0
0.016	1002.0	0.012	1000.4	0.012	1000.9	0.019	1001.8	0.016	1000.8	0.017	1002.1
0.016	1004.0	0.012	1002.3	0.012	1002.4	0.019	1002.9	0.016	1002.8	0.017	1003.5
0.016	1005.3	0.012	1005.4	0.012	1004.4	0.019	1004.4	0.016	1004.6	0.017	1004.7
0.016	1006.3	0.012	1007.5	0.012	1006.3	0.019	1006.0	0.016	1006.3	0.017	1006.2
0.016	1007.5	0.012	1008.6	0.012	1007.9	0.019	1008.0	0.016	1007.8	0.017	1008.1
0.016	1010.4	0.012	1009.9	0.012	1009.7	0.019	1009.8	0.016	1008.9	0.018	1010.1
0.016	1013.4	0.012	1011.1	0.012	1011.2	0.019	1011.4	0.016	1010.2	0.018	1011.8
0.016	1014.4	0.012	1012.6	0.012	1012.3	0.019	1012.8	0.016	1012.9	0.018	1013.5

0.017	1015.7	0.012	1014.1	0.012	1013.6	0.019	1013.9	0.016	1015.9	0.018	1014.6
0.017	1016.9	0.012	1016.1	0.012	1016.2	0.019	1015.4	0.016	1016.8	0.018	1015.9
0.017	1018.3	0.012	1018.0	0.012	1019.1	0.019	1018.6	0.016	1018.3	0.018	1017.6
0.017	1019.7	0.012	1019.6	0.012	1020.1	0.019	1021.1	0.016	1019.4	0.018	1020.9
0.017	1021.7	0.012	1021.5	0.012	1021.4	0.019	1022.0	0.016	1020.8	0.018	1022.8
0.017	1023.8	0.013	1022.9	0.012	1022.7	0.019	1023.3	0.017	1022.4	0.018	1023.9
0.017	1025.5	0.013	1024.0	0.012	1024.2	0.019	1024.5	0.017	1024.3	0.018	1025.3
0.017	1027.3	0.013	1025.1	0.012	1025.7	0.019	1025.9	0.017	1026.3	0.018	1026.4
0.017	1028.4	0.013	1027.5	0.012	1027.7	0.019	1027.7	0.017	1027.9	0.018	1027.8
0.017	1029.5	0.013	1030.8	0.012	1029.6	0.019	1029.7	0.017	1029.7	0.018	1029.6
0.017	1031.3	0.013	1032.1	0.012	1031.4	0.019	1031.4	0.017	1031.0	0.018	1031.8
0.017	1034.5	0.013	1033.2	0.012	1033.1	0.019	1033.2	0.017	1032.1	0.018	1033.5
0.017	1036.4	0.013	1034.6	0.012	1034.5	0.019	1034.4	0.017	1033.6	0.018	1035.2
0.017	1037.5	0.013	1036.0	0.012	1035.6	0.019	1035.4	0.017	1036.7	0.018	1036.4
0.017	1038.9	0.013	1037.4	0.012	1036.9	0.019	1037.2	0.017	1039.1	0.018	1037.6
0.017	1040.1	0.013	1039.2	0.012	1039.6	0.019	1040.7	0.017	1040.0	0.018	1039.3
0.017	1041.4	0.013	1041.2	0.012	1042.4	0.019	1042.4	0.017	1041.5	0.018	1042.4
0.017	1043.3	0.013	1043.0	0.013	1043.5	0.019	1043.4	0.017	1042.7	0.018	1044.5
0.017	1045.3	0.013	1044.8	0.013	1044.7	0.019	1044.8	0.017	1044.3	0.018	1045.6
0.017	1047.2	0.013	1046.4	0.013	1046.1	0.020	1046.1	0.017	1045.7	0.018	1046.9
0.017	1048.8	0.013	1047.4	0.013	1047.5	0.020	1047.6	0.017	1047.7	0.018	1048.1
0.017	1050.2	0.013	1048.6	0.013	1049.0	0.020	1049.4	0.017	1049.7	0.018	1049.5
0.017	1051.5	0.013	1050.8	0.013	1050.9	0.020	1051.5	0.017	1051.4	0.018	1051.3
0.017	1052.6	0.013	1054.0	0.013	1052.9	0.020	1053.1	0.017	1053.0	0.018	1053.3
0.017	1055.1	0.013	1055.5	0.013	1054.5	0.020	1054.7	0.017	1054.1	0.018	1055.0
0.017	1058.4	0.013	1056.6	0.013	1056.3	0.020	1056.1	0.017	1055.3	0.019	1056.8
0.017	1059.4	0.013	1058.1	0.013	1057.8	0.020	1057.0	0.017	1057.3	0.019	1058.2
0.017	1060.8	0.013	1059.3	0.013	1058.9	0.020	1059.0	0.017	1060.6	0.019	1059.3
0.017	1062.1	0.013	1060.6	0.013	1060.1	0.020	1062.5	0.017	1062.2	0.019	1060.8
0.018	1063.4	0.013	1062.6	0.013	1062.8	0.020	1063.8	0.017	1063.3	0.019	1064.1
0.018	1064.8	0.013	1064.5	0.013	1065.7	0.020	1065.2	0.017	1064.7	0.019	1066.2
0.018	1066.7	0.013	1066.4	0.013	1066.9	0.020	1066.4	0.017	1066.0	0.019	1067.2
0.018	1068.7	0.013	1068.1	0.013	1068.3	0.020	1067.7	0.017	1067.4	0.019	1068.6
0.018	1070.5	0.013	1069.6	0.013	1069.4	0.020	1069.2	0.017	1069.2	0.019	1069.7
0.018	1072.3	0.013	1070.7	0.013	1070.8	0.020	1071.1	0.018	1071.2	0.019	1071.1
0.018	1073.6	0.013	1071.9	0.013	1072.4	0.020	1073.2	0.018	1073.0	0.019	1073.0
0.018	1074.7	0.014	1074.2	0.013	1074.3	0.020	1074.8	0.018	1074.6	0.019	1075.0
0.018	1076.0	0.014	1077.5	0.013	1076.2	0.020	1076.5	0.018	1076.2	0.019	1076.8
0.018	1079.2	0.014	1078.7	0.013	1078.0	0.020	1077.5	0.018	1077.3	0.019	1078.5
0.018	1081.7	0.014	1079.9	0.013	1079.8	0.020	1078.6	0.018	1078.5	0.019	1079.9
0.018	1082.8	0.014	1081.3	0.013	1081.2	0.020	1081.0	0.018	1081.1	0.019	1081.1
0.018	1084.0	0.014	1082.6	0.013	1082.2	0.020	1084.2	0.018	1084.2	0.019	1082.4
0.018	1085.2	0.014	1084.1	0.013	1083.6	0.020	1085.6	0.018	1085.4	0.019	1085.2
0.018	1086.6	0.014	1085.9	0.013	1086.4	0.020	1086.8	0.018	1086.5	0.019	1087.9
0.018	1088.2	0.014	1087.8	0.013	1089.2	0.020	1087.9	0.018	1087.8	0.019	1088.9
0.018	1090.1	0.014	1089.7	0.013	1090.0	0.020	1089.3	0.018	1089.2	0.019	1090.4
0.018	1092.2	0.014	1091.5	0.013	1091.4	0.020	1090.9	0.018	1090.6	0.019	1091.4
0.018	1093.7	0.014	1092.9	0.014	1092.8	0.021	1092.9	0.018	1092.5	0.019	1093.0
0.018	1095.5	0.014	1094.0	0.014	1094.2	0.021	1094.8	0.018	1094.6	0.019	1094.6
0.018	1096.7	0.014	1095.2	0.014	1095.7	0.021	1096.4	0.018	1096.2	0.019	1096.6
0.018	1097.8	0.014	1097.6	0.014	1097.7	0.021	1098.1	0.018	1098.0	0.019	1098.5
0.018	1099.6	0.014	1100.9	0.014	1099.6	0.021	1099.2	0.018	1099.5	0.019	1100.2
0.018	1102.9	0.014	1102.1	0.014	1101.4	0.021	1100.4	0.018	1100.7	0.019	1101.6
0.018	1104.7	0.014	1103.4	0.014	1103.1	0.021	1102.8	0.018	1101.8	0.020	1102.8
0.018	1105.7	0.014	1104.7	0.014	1104.4	0.021	1105.9	0.018	1104.5	0.020	1103.9
0.018	1107.1	0.014	1105.9	0.014	1105.5	0.021	1107.1	0.018	1107.4	0.020	1106.6
0.018	1108.4	0.014	1107.3	0.014	1106.9	0.021	1108.4	0.018	1108.6	0.020	1109.7

0.018	1109.8	0.014	1109.2	0.014	1109.7	0.021	1109.6	0.018	1109.8	0.020	1110.8
0.018	1111.5	0.014	1111.2	0.014	1112.5	0.021	1110.9	0.018	1111.1	0.020	1112.1
0.019	1113.6	0.014	1113.0	0.014	1113.5	0.021	1112.6	0.018	1112.5	0.020	1113.2
0.019	1115.5	0.014	1114.7	0.014	1114.9	0.021	1114.6	0.018	1114.1	0.020	1114.7
0.019	1117.1	0.014	1116.4	0.014	1116.1	0.021	1116.5	0.018	1116.0	0.020	1116.2
0.019	1118.7	0.014	1117.5	0.014	1117.5	0.021	1118.1	0.018	1118.1	0.020	1118.3
0.019	1119.9	0.014	1118.6	0.014	1119.1	0.021	1119.8	0.019	1119.6	0.020	1120.2
0.019	1120.9	0.014	1120.6	0.014	1121.1	0.021	1120.9	0.019	1121.3	0.020	1121.8
0.019	1123.3	0.015	1124.0	0.014	1123.0	0.021	1122.0	0.019	1122.7	0.020	1123.4
0.019	1126.6	0.015	1125.5	0.014	1124.7	0.021	1124.5	0.019	1124.0	0.020	1124.6
0.019	1127.8	0.015	1126.7	0.014	1126.4	0.021	1127.7	0.019	1125.2	0.020	1125.7
0.019	1129.1	0.015	1128.1	0.014	1127.7	0.021	1128.7	0.019	1127.9	0.020	1127.9
0.019	1130.4	0.015	1129.4	0.014	1128.8	0.021	1130.0	0.019	1130.8	0.020	1131.2
0.019	1131.8	0.015	1130.8	0.014	1130.2	0.021	1131.3	0.019	1131.9	0.020	1132.5
0.019	1133.3	0.015	1132.5	0.014	1133.2	0.021	1132.7	0.019	1133.3	0.020	1133.8
0.019	1135.0	0.015	1134.6	0.014	1135.8	0.021	1134.3	0.019	1134.5	0.020	1135.0
0.019	1137.0	0.015	1136.5	0.014	1136.8	0.021	1136.3	0.019	1135.9	0.020	1136.4
0.019	1138.9	0.015	1138.0	0.014	1138.2	0.022	1138.2	0.019	1137.5	0.020	1137.9
0.019	1140.6	0.015	1139.7	0.014	1139.4	0.022	1139.8	0.019	1139.3	0.020	1139.8
0.019	1141.9	0.015	1140.9	0.015	1140.8	0.022	1141.4	0.019	1141.3	0.020	1141.7
0.019	1143.1	0.015	1142.1	0.015	1142.2	0.022	1142.5	0.019	1143.1	0.020	1143.3
0.019	1144.3	0.015	1143.8	0.015	1144.3	0.022	1143.5	0.019	1144.7	0.020	1145.1
0.019	1147.1	0.015	1147.1	0.015	1146.2	0.022	1146.2	0.019	1146.1	0.020	1146.3
0.019	1150.1	0.015	1149.1	0.015	1148.0	0.022	1149.3	0.019	1147.2	0.020	1147.5
0.019	1150.9	0.015	1150.2	0.015	1149.8	0.022	1150.4	0.019	1148.6	0.021	1149.3
0.019	1152.3	0.015	1151.6	0.015	1151.0	0.022	1151.6	0.019	1151.4	0.021	1152.4
0.019	1153.5	0.015	1152.8	0.015	1152.1	0.022	1152.8	0.019	1154.1	0.021	1154.4
0.019	1155.0	0.015	1154.3	0.015	1153.7	0.022	1154.2	0.019	1155.1	0.021	1155.6
0.019	1156.6	0.015	1155.8	0.015	1156.7	0.022	1155.9	0.019	1156.5	0.021	1157.0
0.019	1158.5	0.015	1157.7	0.015	1159.0	0.022	1157.9	0.019	1157.7	0.021	1158.2
0.019	1160.5	0.015	1159.7	0.015	1160.1	0.022	1159.9	0.019	1159.1	0.021	1159.5
0.020	1162.1	0.015	1161.2	0.015	1161.5	0.022	1161.6	0.019	1160.7	0.021	1161.4
0.020	1163.8	0.015	1163.0	0.015	1162.7	0.022	1163.1	0.019	1162.8	0.021	1163.4
0.020	1165.1	0.015	1164.4	0.015	1164.1	0.022	1164.2	0.019	1164.7	0.021	1165.1
0.020	1166.2	0.015	1165.6	0.015	1165.7	0.022	1165.3	0.019	1166.3	0.021	1166.8
0.020	1167.8	0.015	1167.0	0.015	1167.7	0.022	1167.6	0.019	1168.1	0.021	1168.2
0.020	1170.8	0.015	1170.0	0.015	1169.5	0.022	1171.0	0.020	1169.4	0.021	1169.4
0.020	1173.2	0.015	1172.6	0.015	1171.3	0.022	1172.2	0.020	1170.5	0.021	1170.6
0.020	1174.2	0.015	1173.5	0.015	1172.9	0.022	1173.3	0.020	1171.9	0.021	1173.5
0.020	1175.5	0.016	1174.9	0.015	1174.2	0.022	1174.6	0.020	1174.6	0.021	1176.3
0.020	1176.9	0.016	1176.1	0.015	1175.4	0.022	1176.0	0.020	1177.5	0.021	1177.3
0.020	1178.4	0.016	1177.5	0.015	1177.1	0.022	1177.5	0.020	1178.4	0.021	1178.8
0.020	1179.9	0.016	1179.1	0.015	1180.3	0.022	1179.5	0.020	1179.8	0.021	1179.8
0.020	1181.8	0.016	1181.0	0.015	1182.4	0.022	1181.5	0.020	1181.1	0.021	1181.2
0.020	1183.8	0.016	1182.9	0.015	1183.4	0.022	1183.1	0.020	1182.5	0.021	1182.8
0.020	1185.4	0.016	1184.7	0.015	1184.9	0.023	1184.9	0.020	1184.0	0.021	1184.9
0.020	1187.1	0.016	1186.5	0.015	1186.0	0.023	1186.1	0.020	1186.0	0.021	1186.9
0.020	1188.4	0.016	1187.8	0.015	1187.4	0.023	1187.0	0.020	1188.0	0.021	1188.6
0.020	1189.5	0.016	1189.0	0.015	1189.2	0.023	1189.0	0.020	1189.6	0.021	1190.2
0.020	1191.1	0.016	1190.2	0.016	1191.1	0.023	1192.3	0.020	1191.5	0.021	1191.3
0.020	1194.3	0.016	1192.5	0.016	1193.0	0.023	1193.9	0.020	1192.9	0.021	1192.5
0.020	1196.5	0.016	1195.7	0.016	1194.7	0.023	1195.2	0.020	1193.9	0.021	1194.8
0.020	1197.5	0.016	1197.0	0.016	1196.3	0.023	1196.4	0.020	1195.1	0.022	1197.9
0.020	1199.0	0.016	1198.2	0.016	1197.4	0.023	1197.8	0.020	1197.8	0.022	1199.1
0.020	1200.1	0.016	1199.7	0.016	1198.6	0.023	1199.2	0.020	1200.7	0.022	1200.4
0.020	1201.5	0.016	1200.9	0.016	1200.5	0.023	1201.2	0.020	1201.9	0.022	1201.6
0.020	1203.2	0.016	1202.5	0.016	1203.8	0.023	1203.2	0.020	1203.2	0.022	1203.0

0.020	1205.1	0.016	1204.2	0.016	1205.6	0.023	1204.8	0.020	1204.5	0.022	1204.5
0.020	1206.9	0.016	1206.2	0.016	1206.8	0.023	1206.4	0.020	1205.9	0.022	1206.4
0.020	1208.6	0.016	1208.1	0.016	1208.1	0.023	1207.8	0.020	1207.4	0.022	1208.6
0.020	1210.5	0.016	1209.7	0.016	1209.3	0.023	1208.8	0.020	1209.3	0.022	1210.1
0.021	1211.8	0.016	1211.3	0.016	1210.6	0.023	1210.6	0.020	1211.3	0.022	1211.7
0.021	1212.9	0.016	1212.5	0.016	1212.4	0.023	1213.9	0.020	1213.0	0.022	1213.0
0.021	1214.5	0.016	1213.7	0.016	1214.5	0.023	1215.8	0.020	1214.7	0.022	1214.2
0.021	1217.6	0.016	1215.6	0.016	1216.4	0.023	1216.8	0.020	1216.2	0.022	1216.1
0.021	1220.0	0.016	1218.8	0.016	1218.1	0.023	1218.2	0.020	1217.4	0.022	1219.3
0.021	1221.0	0.016	1220.7	0.016	1219.7	0.023	1219.5	0.020	1218.5	0.022	1221.1
0.021	1222.3	0.016	1221.7	0.016	1220.7	0.023	1220.8	0.021	1220.7	0.022	1222.1
0.021	1223.5	0.016	1223.4	0.016	1221.9	0.023	1222.8	0.021	1223.9	0.022	1223.5
0.021	1224.9	0.017	1224.5	0.016	1224.1	0.023	1224.8	0.021	1225.4	0.022	1224.7
0.021	1226.5	0.017	1225.9	0.016	1227.3	0.023	1226.3	0.021	1226.7	0.022	1226.3
0.021	1228.4	0.017	1227.5	0.016	1228.7	0.023	1228.2	0.021	1228.0	0.022	1228.1
0.021	1230.4	0.017	1229.2	0.016	1229.9	0.023	1229.6	0.021	1229.2	0.022	1229.8
0.021	1232.1	0.017	1231.3	0.016	1231.3	0.023	1230.6	0.021	1230.7	0.022	1232.0
0.021	1233.8	0.017	1233.0	0.016	1232.6	0.024	1232.1	0.021	1232.6	0.022	1233.4
0.021	1235.2	0.017	1234.7	0.016	1234.0	0.024	1235.2	0.021	1234.6	0.022	1234.5
0.021	1236.3	0.017	1236.1	0.016	1235.8	0.024	1237.7	0.021	1236.4	0.022	1235.5
0.021	1237.7	0.017	1237.3	0.016	1237.9	0.024	1238.6	0.021	1238.1	0.022	1238.0
0.021	1240.7	0.017	1238.5	0.016	1239.7	0.024	1239.9	0.021	1239.7	0.022	1241.3
0.021	1243.4	0.017	1241.3	0.017	1241.4	0.024	1241.1	0.021	1240.9	0.022	1242.4
0.021	1244.3	0.017	1244.2	0.017	1242.9	0.024	1242.5	0.021	1242.0	0.023	1243.6
0.021	1245.6	0.017	1245.4	0.017	1244.0	0.024	1244.3	0.021	1243.9	0.023	1244.8
0.021	1247.0	0.017	1246.6	0.017	1245.2	0.024	1246.4	0.021	1247.2	0.023	1246.3
0.021	1248.3	0.017	1247.9	0.017	1247.4	0.024	1248.2	0.021	1249.0	0.023	1247.9
0.021	1249.9	0.017	1249.3	0.017	1250.6	0.024	1249.9	0.021	1249.9	0.023	1249.9
0.021	1251.9	0.017	1250.8	0.017	1252.0	0.024	1251.4	0.021	1251.5	0.023	1251.8
0.021	1253.9	0.017	1252.6	0.017	1253.2	0.024	1252.5	0.021	1252.6	0.023	1253.5
0.021	1255.4	0.017	1254.7	0.017	1254.7	0.024	1253.6	0.021	1254.1	0.023	1255.2
0.021	1257.2	0.017	1256.3	0.017	1256.0	0.024	1256.3	0.021	1255.7	0.023	1256.4
0.021	1258.5	0.017	1258.1	0.017	1257.5	0.024	1259.4	0.021	1257.8	0.023	1257.5
0.021	1259.7	0.017	1259.7	0.017	1259.2	0.024	1260.5	0.021	1259.7	0.023	1259.2
0.022	1260.9	0.017	1260.9	0.017	1261.2	0.024	1261.7	0.021	1261.2	0.023	1262.4
0.022	1263.7	0.017	1262.1	0.017	1263.0	0.024	1262.9	0.021	1263.0	0.023	1264.5
0.022	1266.6	0.017	1263.9	0.017	1264.7	0.024	1264.3	0.021	1264.3	0.023	1265.5
0.022	1267.6	0.017	1267.1	0.017	1266.1	0.024	1265.8	0.021	1265.5	0.023	1266.9
0.022	1269.0	0.017	1269.1	0.017	1267.4	0.024	1267.9	0.021	1267.0	0.023	1268.2
0.022	1270.2	0.017	1270.0	0.017	1268.5	0.024	1269.9	0.021	1270.1	0.023	1269.5
0.022	1271.7	0.017	1271.5	0.017	1270.8	0.024	1271.5	0.022	1272.5	0.023	1271.4
0.022	1273.2	0.017	1272.7	0.017	1274.1	0.024	1273.2	0.022	1273.5	0.023	1273.5
0.022	1275.0	0.017	1274.1	0.017	1275.4	0.024	1274.5	0.022	1274.8	0.023	1275.2
0.022	1277.1	0.018	1275.8	0.017	1276.7	0.024	1275.4	0.022	1276.1	0.023	1277.0
0.022	1278.8	0.018	1277.9	0.017	1278.0	0.024	1277.5	0.022	1277.4	0.023	1278.3
0.022	1280.5	0.018	1279.8	0.017	1279.2	0.025	1280.8	0.022	1279.0	0.023	1279.4
0.022	1282.0	0.018	1281.3	0.017	1280.7	0.025	1282.3	0.022	1280.9	0.023	1280.6
0.022	1283.1	0.018	1283.0	0.017	1282.5	0.025	1283.3	0.022	1282.9	0.023	1283.3
0.022	1284.3	0.018	1284.4	0.017	1284.6	0.025	1284.7	0.022	1284.5	0.023	1286.3
0.022	1286.7	0.018	1285.7	0.017	1286.3	0.025	1286.1	0.022	1286.3	0.023	1287.3
0.022	1289.9	0.018	1287.0	0.017	1288.0	0.025	1287.6	0.022	1287.9	0.023	1288.7
0.022	1291.1	0.018	1289.5	0.018	1289.6	0.025	1289.4	0.022	1289.0	0.023	1289.9
0.022	1292.2	0.018	1292.4	0.018	1290.7	0.025	1291.5	0.022	1290.2	0.024	1291.3
0.022	1293.7	0.018	1293.6	0.018	1291.8	0.025	1293.2	0.022	1292.6	0.024	1292.9
0.022	1295.0	0.018	1294.8	0.018	1294.1	0.025	1294.9	0.022	1295.8	0.024	1294.8
0.022	1296.5	0.018	1296.3	0.018	1297.2	0.025	1296.2	0.022	1297.0	0.024	1296.9
0.022	1298.4	0.018	1297.6	0.018	1298.6	0.025	1297.2	0.022	1298.2	0.024	1298.5

0.022	1300.3	0.018	1299.2	0.018	1299.9	0.025	1298.9	0.022	1299.6	0.024	1300.1
0.022	1302.2	0.018	1300.9	0.018	1301.3	0.025	1302.2	0.022	1301.0	0.024	1301.4
0.022	1304.0	0.018	1302.9	0.018	1302.6	0.025	1304.2	0.022	1302.4	0.024	1302.5
0.022	1305.4	0.018	1304.7	0.018	1304.2	0.025	1305.2	0.022	1304.1	0.024	1304.4
0.022	1306.6	0.018	1306.4	0.018	1305.8	0.025	1306.5	0.022	1306.2	0.024	1307.7
0.022	1307.7	0.018	1308.0	0.018	1307.9	0.025	1307.8	0.022	1308.1	0.024	1309.5
0.022	1309.7	0.018	1309.3	0.018	1309.7	0.025	1309.2	0.022	1309.7	0.024	1310.5
0.023	1313.0	0.018	1310.4	0.018	1311.3	0.025	1311.0	0.022	1311.4	0.024	1311.9
0.023	1314.8	0.018	1312.2	0.018	1312.8	0.025	1313.1	0.022	1312.6	0.024	1313.0
0.023	1315.8	0.018	1315.3	0.018	1314.0	0.025	1314.9	0.022	1313.7	0.024	1314.6
0.023	1317.2	0.018	1317.5	0.018	1315.1	0.025	1316.5	0.022	1315.5	0.024	1316.4
0.023	1318.6	0.018	1318.4	0.018	1317.3	0.025	1318.0	0.022	1318.7	0.024	1318.4
0.023	1319.9	0.018	1319.8	0.018	1320.6	0.025	1319.0	0.022	1320.8	0.024	1320.1
0.023	1321.6	0.018	1321.1	0.018	1322.1	0.025	1320.3	0.022	1321.7	0.024	1321.8
0.023	1323.6	0.018	1322.5	0.018	1323.2	0.025	1323.0	0.023	1323.2	0.024	1323.5
0.023	1325.5	0.018	1324.0	0.018	1324.7	0.025	1326.0	0.023	1324.4	0.024	1324.5
0.023	1327.2	0.018	1326.1	0.018	1326.1	0.026	1326.9	0.023	1325.9	0.024	1325.6
0.023	1328.9	0.019	1328.0	0.018	1327.4	0.026	1328.5	0.023	1327.5	0.024	1328.1
0.023	1330.2	0.019	1329.8	0.018	1329.3	0.026	1329.6	0.023	1329.3	0.024	1331.2
0.023	1331.3	0.019	1331.5	0.018	1331.2	0.026	1331.0	0.023	1331.4	0.024	1332.5
0.023	1332.8	0.019	1333.0	0.018	1333.0	0.026	1332.5	0.023	1333.0	0.024	1333.6
0.023	1335.9	0.019	1334.1	0.018	1334.6	0.026	1334.5	0.023	1334.7	0.024	1335.0
0.023	1338.3	0.019	1335.3	0.018	1336.2	0.026	1336.5	0.023	1336.1	0.024	1336.3
0.023	1339.3	0.019	1337.5	0.018	1337.5	0.026	1338.2	0.023	1337.2	0.024	1337.7
0.023	1340.7	0.019	1340.7	0.018	1338.6	0.026	1339.8	0.023	1338.5	0.025	1339.9
0.023	1341.9	0.019	1342.2	0.019	1340.6	0.026	1341.0	0.023	1341.1	0.025	1341.9
0.023	1343.3	0.019	1343.3	0.019	1343.9	0.026	1342.1	0.023	1344.1	0.025	1343.5
0.023	1344.9	0.019	1344.7	0.019	1345.5	0.026	1344.1	0.023	1345.2	0.025	1345.2
0.023	1346.9	0.019	1346.1	0.019	1346.5	0.026	1347.4	0.023	1346.6	0.025	1346.7
0.023	1348.8	0.019	1347.3	0.019	1348.0	0.026	1349.0	0.023	1348.0	0.025	1347.7
0.023	1350.3	0.019	1349.3	0.019	1349.2	0.026	1350.1	0.023	1349.2	0.025	1349.0
0.023	1352.2	0.019	1351.2	0.019	1350.7	0.026	1351.5	0.023	1350.8	0.025	1352.0
0.023	1353.7	0.019	1353.0	0.019	1352.4	0.026	1352.8	0.023	1352.5	0.025	1354.6
0.023	1354.8	0.019	1354.8	0.019	1354.6	0.026	1354.2	0.023	1354.5	0.025	1355.6
0.023	1356.0	0.019	1356.4	0.019	1356.3	0.026	1356.0	0.023	1356.4	0.025	1356.9
0.023	1358.4	0.019	1357.7	0.019	1358.0	0.026	1358.1	0.023	1358.1	0.025	1358.2
0.023	1361.5	0.019	1358.8	0.019	1359.6	0.026	1359.8	0.023	1359.6	0.025	1359.7
0.023	1362.8	0.019	1360.4	0.019	1360.9	0.026	1361.6	0.023	1360.8	0.025	1361.2
0.024	1364.0	0.019	1363.4	0.019	1362.1	0.026	1363.0	0.023	1361.9	0.025	1363.3
0.024	1365.4	0.019	1365.7	0.019	1364.0	0.026	1364.1	0.023	1363.8	0.025	1365.1
0.024	1366.8	0.019	1366.9	0.019	1367.0	0.026	1365.4	0.023	1367.0	0.025	1366.9
0.024	1368.1	0.019	1368.2	0.019	1369.0	0.026	1368.2	0.023	1368.9	0.025	1368.5
0.024	1370.1	0.019	1369.4	0.019	1370.0	0.026	1370.9	0.023	1370.0	0.025	1369.7
0.024	1371.9	0.019	1371.0	0.019	1371.4	0.026	1371.9	0.023	1371.5	0.025	1370.8
0.024	1373.8	0.019	1372.3	0.019	1372.7	0.026	1373.4	0.023	1372.7	0.025	1372.6
0.024	1375.5	0.019	1374.3	0.019	1374.1	0.027	1374.6	0.024	1374.2	0.025	1375.9
0.024	1377.2	0.019	1376.3	0.019	1375.8	0.027	1375.9	0.024	1375.6	0.025	1377.9
0.024	1378.5	0.019	1377.9	0.019	1377.8	0.027	1377.6	0.024	1377.5	0.025	1378.8
0.024	1379.6	0.020	1379.7	0.019	1379.8	0.027	1379.6	0.024	1379.6	0.025	1380.2
0.024	1381.2	0.020	1381.3	0.019	1381.2	0.027	1381.6	0.024	1381.4	0.025	1381.4
0.024	1384.0	0.020	1382.4	0.019	1382.9	0.027	1383.2	0.024	1383.1	0.025	1382.8
0.024	1386.6	0.020	1383.6	0.019	1384.1	0.027	1384.7	0.024	1384.6	0.025	1384.6
0.024	1387.6	0.020	1385.7	0.019	1385.4	0.027	1386.0	0.024	1385.7	0.025	1386.6
0.024	1388.8	0.020	1389.0	0.019	1387.1	0.027	1387.0	0.024	1386.9	0.026	1388.5
0.024	1390.2	0.020	1390.7	0.020	1390.0	0.027	1389.2	0.024	1389.3	0.026	1390.3
0.024	1391.8	0.020	1391.7	0.020	1392.4	0.027	1392.5	0.024	1392.2	0.026	1391.8
0.024	1393.1	0.020	1393.0	0.020	1393.4	0.027	1393.9	0.024	1393.6	0.026	1393.0

0.024	1395.0	0.020	1394.3	0.020	1394.7	0.027	1395.1	0.024	1394.9	0.026	1394.0
0.024	1397.0	0.020	1395.8	0.020	1396.0	0.027	1396.4	0.024	1396.4	0.026	1396.3
0.024	1398.9	0.020	1397.5	0.020	1397.5	0.027	1397.6	0.024	1397.7	0.026	1399.4
0.024	1400.5	0.020	1399.5	0.020	1399.1	0.027	1399.1	0.024	1399.1	0.026	1400.9
0.024	1402.2	0.020	1401.4	0.020	1401.0	0.027	1401.0	0.024	1400.8	0.026	1402.0
0.024	1403.4	0.020	1402.9	0.020	1402.9	0.027	1403.0	0.024	1402.7	0.026	1403.4
0.024	1404.5	0.020	1404.8	0.020	1404.5	0.027	1404.9	0.024	1404.6	0.026	1404.8
0.024	1406.2	0.020	1406.1	0.020	1406.4	0.027	1406.5	0.024	1406.2	0.026	1406.2
0.024	1409.4	0.020	1407.3	0.020	1407.7	0.027	1407.9	0.024	1408.0	0.026	1408.0
0.024	1411.5	0.020	1408.5	0.020	1408.8	0.027	1409.0	0.024	1409.2	0.026	1410.1
0.024	1412.5	0.020	1411.1	0.020	1410.2	0.027	1410.5	0.024	1410.5	0.026	1411.8
0.024	1414.0	0.020	1414.2	0.020	1413.1	0.027	1413.6	0.024	1411.9	0.026	1413.6
0.025	1415.2	0.020	1415.3	0.020	1415.8	0.027	1416.0	0.024	1414.8	0.026	1415.0
0.025	1416.7	0.020	1416.5	0.020	1416.8	0.027	1416.9	0.024	1417.4	0.026	1416.2
0.025	1418.2	0.020	1418.1	0.020	1418.1	0.027	1418.4	0.024	1418.5	0.026	1417.3
0.025	1420.1	0.020	1419.3	0.020	1419.3	0.027	1419.5	0.024	1419.9	0.026	1419.8
0.025	1422.1	0.020	1420.8	0.020	1420.8	0.027	1420.9	0.024	1421.2	0.026	1422.9
0.025	1423.7	0.020	1422.6	0.020	1422.4	0.028	1422.5	0.024	1422.6	0.026	1424.0
0.025	1425.6	0.020	1424.5	0.020	1424.3	0.028	1424.5	0.024	1424.0	0.026	1425.4
0.025	1427.0	0.020	1426.3	0.020	1426.3	0.028	1427.0	0.025	1425.9	0.026	1426.7
0.025	1428.2	0.020	1428.1	0.020	1428.0	0.028	1428.3	0.025	1427.8	0.026	1428.0
0.025	1429.4	0.020	1429.7	0.020	1429.8	0.028	1429.5	0.025	1429.6	0.026	1429.5
0.025	1431.6	0.020	1430.9	0.020	1431.3	0.028	1430.5	0.025	1431.4	0.026	1431.4
0.025	1434.8	0.021	1432.1	0.020	1432.4	0.028	1432.2	0.025	1432.9	0.026	1433.4
0.025	1436.3	0.021	1433.8	0.020	1433.5	0.028	1435.6	0.025	1434.1	0.026	1435.1
0.025	1437.3	0.021	1437.1	0.020	1435.9	0.028	1437.4	0.025	1435.3	0.026	1436.9
0.025	1438.8	0.021	1439.1	0.020	1439.0	0.028	1438.6	0.025	1437.3	0.027	1438.3
0.025	1440.2	0.021	1440.2	0.020	1440.3	0.028	1439.9	0.025	1440.5	0.027	1439.4
0.025	1441.6	0.021	1441.5	0.021	1441.5	0.028	1441.1	0.025	1442.2	0.027	1440.7
0.025	1443.2	0.021	1442.8	0.021	1442.9	0.028	1442.6	0.025	1443.4	0.027	1443.4
0.025	1445.2	0.021	1444.2	0.021	1444.3	0.028	1444.3	0.025	1444.8	0.027	1446.2
0.025	1447.2	0.021	1445.7	0.021	1445.8	0.028	1446.4	0.025	1446.0	0.027	1447.2
0.025	1448.8	0.021	1447.6	0.021	1447.6	0.028	1448.3	0.025	1447.5	0.027	1448.7
0.025	1450.7	0.021	1449.6	0.021	1449.6	0.028	1449.8	0.025	1449.0	0.027	1449.9
0.025	1451.9	0.021	1451.2	0.021	1451.3	0.028	1451.5	0.025	1451.0	0.027	1451.3
0.025	1453.0	0.021	1453.1	0.021	1453.1	0.028	1452.6	0.025	1452.9	0.027	1452.7
0.025	1454.4	0.021	1454.7	0.021	1454.6	0.028	1453.6	0.025	1454.6	0.027	1454.6
0.025	1457.2	0.021	1455.8	0.021	1455.8	0.028	1456.0	0.025	1456.4	0.027	1456.8
0.025	1460.0	0.021	1457.0	0.021	1456.8	0.028	1459.4	0.025	1458.0	0.027	1458.5
0.025	1460.8	0.021	1459.2	0.021	1458.9	0.028	1460.4	0.025	1459.1	0.027	1460.2
0.025	1462.3	0.021	1462.4	0.021	1462.1	0.028	1461.7	0.025	1460.1	0.027	1461.6
0.025	1463.6	0.021	1463.9	0.021	1464.0	0.028	1463.0	0.025	1462.6	0.027	1462.7
0.025	1465.1	0.021	1465.0	0.021	1465.1	0.028	1464.5	0.025	1465.6	0.027	1464.1
0.025	1466.4	0.021	1466.4	0.021	1466.5	0.028	1465.9	0.025	1467.2	0.027	1466.9
0.026	1468.3	0.021	1467.6	0.021	1467.6	0.028	1467.8	0.025	1468.2	0.027	1469.5
0.026	1470.4	0.021	1469.1	0.021	1469.0	0.029	1469.7	0.025	1469.9	0.027	1470.5
0.026	1472.2	0.021	1470.8	0.021	1470.8	0.029	1471.4	0.025	1471.0	0.027	1472.2
0.026	1473.8	0.021	1472.8	0.021	1472.7	0.029	1473.1	0.025	1472.5	0.027	1473.2
0.026	1475.5	0.021	1474.8	0.021	1474.7	0.029	1474.5	0.025	1474.0	0.027	1474.6
0.026	1476.6	0.021	1476.3	0.021	1476.3	0.029	1475.7	0.025	1476.0	0.027	1476.1
0.026	1477.8	0.021	1478.1	0.021	1478.0	0.029	1477.1	0.025	1478.1	0.027	1478.2
0.026	1479.6	0.021	1479.5	0.021	1479.3	0.029	1480.4	0.026	1479.7	0.027	1480.1
0.026	1482.7	0.021	1480.6	0.021	1480.5	0.029	1482.7	0.026	1481.3	0.027	1481.8
0.026	1484.8	0.021	1481.9	0.021	1482.0	0.029	1483.5	0.026	1482.8	0.027	1483.5
0.026	1485.9	0.022	1484.9	0.021	1485.1	0.029	1485.0	0.026	1484.0	0.027	1484.7
0.026	1487.3	0.022	1487.5	0.021	1487.6	0.029	1486.1	0.026	1485.3	0.027	1485.9
0.026	1488.6	0.022	1488.6	0.021	1488.4	0.029	1487.6	0.026	1487.6	0.028	1487.5

0.026	1490.1	0.022	1489.9	0.021	1489.9	0.029	1489.3	0.026	1490.7	0.028	1490.6
0.026	1491.6	0.022	1491.2	0.021	1491.1	0.029	1491.3	0.026	1492.1	0.028	1493.0
0.026	1493.5	0.022	1492.7	0.022	1492.5	0.029	1493.2	0.026	1493.3	0.028	1493.8
0.026	1495.4	0.022	1494.1	0.022	1494.0	0.029	1494.7	0.026	1494.7	0.028	1495.3
0.026	1497.1	0.022	1495.9	0.022	1496.0	0.029	1496.4	0.026	1496.0	0.028	1496.5
0.026	1498.9	0.022	1498.0	0.022	1498.0	0.029	1497.6	0.026	1497.7	0.028	1497.9
0.026	1500.3	0.022	1499.8	0.022	1499.5	0.029	1498.7	0.026	1499.1	0.028	1499.5
0.026	1501.4	0.022	1501.5	0.022	1501.3	0.029	1500.6	0.026	1501.2	0.028	1501.4
0.026	1502.6	0.022	1503.0	0.022	1502.8	0.029	1503.8	0.026	1503.1	0.028	1503.4
0.026	1504.9	0.022	1504.1	0.022	1504.0	0.029	1505.7	0.026	1504.2	0.028	1505.1
0.026	1508.3	0.022	1505.4	0.022	1504.2	0.029	1506.7	0.026	1505.9	0.028	1506.8
0.026	1509.0	0.022	1506.2	0.022	1505.1	0.029	1508.2	0.026	1506.0	0.028	1508.0
0.026	1510.1	0.022	1508.7	0.022	1507.5	0.029	1509.5	0.026	1507.4	0.028	1509.2
0.026	1511.3	0.022	1511.6	0.022	1510.7	0.029	1510.7	0.026	1508.7	0.028	1510.9
0.026	1512.7	0.022	1513.0	0.022	1512.0	0.029	1511.8	0.026	1509.9	0.028	1511.6
0.026	1514.1	0.022	1514.2	0.022	1513.1	0.029	1513.7	0.026	1512.1	0.028	1514.8
0.026	1515.5	0.022	1515.7	0.022	1514.6	0.029	1515.7	0.026	1515.4	0.028	1516.4
0.026	1517.3	0.022	1517.0	0.022	1515.9	0.030	1517.3	0.026	1517.0	0.028	1517.5
0.026	1519.3	0.022	1518.5	0.022	1517.3	0.030	1519.0	0.026	1518.0	0.028	1518.9
0.027	1521.2	0.022	1520.2	0.022	1519.1	0.030	1520.3	0.026	1519.5	0.028	1520.1
0.027	1522.9	0.022	1522.1	0.022	1521.1	0.030	1521.4	0.026	1520.6	0.028	1521.6
0.027	1524.5	0.022	1524.0	0.022	1523.0	0.030	1523.1	0.026	1522.3	0.028	1523.3
0.027	1525.6	0.022	1525.7	0.022	1524.6	0.030	1526.4	0.026	1523.8	0.028	1525.3
0.027	1526.9	0.022	1527.3	0.022	1526.3	0.030	1528.5	0.026	1525.8	0.028	1527.1
0.027	1528.7	0.022	1528.6	0.022	1527.5	0.030	1529.6	0.026	1527.7	0.028	1528.8
0.027	1531.8	0.022	1529.8	0.022	1528.6	0.030	1531.0	0.026	1529.3	0.028	1530.4
0.027	1533.9	0.022	1531.3	0.022	1530.4	0.030	1532.2	0.027	1531.1	0.028	1531.6
0.027	1534.8	0.022	1534.2	0.022	1533.5	0.030	1533.5	0.027	1532.4	0.028	1532.7
0.027	1536.4	0.022	1536.8	0.022	1535.7	0.030	1535.3	0.027	1533.2	0.028	1534.9
0.027	1537.6	0.023	1537.8	0.022	1536.7	0.030	1537.2	0.027	1535.2	0.029	1538.2
0.027	1539.0	0.023	1539.1	0.022	1537.9	0.030	1539.1	0.027	1538.3	0.029	1539.6
0.027	1540.4	0.023	1540.5	0.022	1539.3	0.030	1540.7	0.027	1540.2	0.029	1540.7
0.027	1542.5	0.023	1541.8	0.022	1540.9	0.030	1542.3	0.027	1541.2	0.029	1542.1
0.027	1544.4	0.023	1543.3	0.023	1542.3	0.030	1543.5	0.027	1542.8	0.029	1543.5
0.027	1546.1	0.023	1545.2	0.023	1544.3	0.030	1544.6	0.027	1544.1	0.029	1544.9
0.027	1547.8	0.023	1547.1	0.023	1546.3	0.030	1546.9	0.027	1545.5	0.029	1546.6
0.027	1549.3	0.023	1549.0	0.023	1547.8	0.030	1550.2	0.027	1547.2	0.029	1548.7
0.027	1550.6	0.023	1550.8	0.023	1549.7	0.030	1551.7	0.027	1548.9	0.029	1550.5
0.027	1551.7	0.023	1552.3	0.023	1551.1	0.030	1552.7	0.027	1551.0	0.029	1552.1
0.027	1553.7	0.023	1553.5	0.023	1552.2	0.030	1554.1	0.027	1552.7	0.029	1553.7
0.027	1556.9	0.023	1554.6	0.023	1553.6	0.030	1555.4	0.027	1554.2	0.029	1555.0
0.027	1558.8	0.023	1556.5	0.023	1556.1	0.030	1556.8	0.027	1555.9	0.029	1556.0
0.027	1559.8	0.023	1559.4	0.023	1559.0	0.030	1558.6	0.027	1557.1	0.029	1558.0
0.027	1561.3	0.023	1561.6	0.023	1560.1	0.030	1560.7	0.027	1558.3	0.029	1561.4
0.027	1562.5	0.023	1562.7	0.023	1561.4	0.030	1562.3	0.027	1560.3	0.029	1563.0
0.027	1563.8	0.023	1564.1	0.023	1562.8	0.030	1564.1	0.027	1563.3	0.029	1564.0
0.027	1565.5	0.023	1565.4	0.023	1564.2	0.030	1565.6	0.027	1565.4	0.029	1565.6
0.027	1567.4	0.023	1566.8	0.023	1565.6	0.031	1566.8	0.027	1566.4	0.029	1566.8
0.027	1569.4	0.023	1568.3	0.023	1567.4	0.031	1568.0	0.027	1568.0	0.029	1568.4
0.027	1571.2	0.023	1570.3	0.023	1569.5	0.031	1570.6	0.027	1569.2	0.029	1569.9
0.028	1572.9	0.023	1572.1	0.023	1571.3	0.031	1573.5	0.027	1570.6	0.029	1571.9
0.028	1574.3	0.023	1574.0	0.023	1573.1	0.031	1574.8	0.027	1572.1	0.029	1573.8
0.028	1575.5	0.023	1575.6	0.023	1574.6	0.031	1575.9	0.027	1574.0	0.029	1575.4
0.028	1576.8	0.023	1577.1	0.023	1575.8	0.031	1577.3	0.027	1576.0	0.029	1577.0
0.028	1579.1	0.023	1578.4	0.023	1576.9	0.031	1578.6	0.027	1577.6	0.029	1578.2
0.028	1582.3	0.023	1579.6	0.023	1578.8	0.031	1580.1	0.027	1579.4	0.029	1579.5
0.028	1583.6	0.023	1581.5	0.023	1582.0	0.031	1582.1	0.027	1580.8	0.029	1581.3

0.028	1584.8	0.023	1584.7	0.023	1583.9	0.031	1584.1	0.027	1582.1	0.029	1584.6
0.028	1586.2	0.023	1586.7	0.023	1584.9	0.031	1585.7	0.028	1583.4	0.029	1586.5
0.028	1587.5	0.023	1587.7	0.023	1586.4	0.031	1587.4	0.028	1585.2	0.030	1587.5
0.028	1588.9	0.023	1589.1	0.023	1587.7	0.031	1588.9	0.028	1588.3	0.030	1588.9
0.028	1590.6	0.024	1590.4	0.023	1589.2	0.031	1589.9	0.028	1590.4	0.030	1590.0
0.028	1592.5	0.024	1591.8	0.023	1590.7	0.031	1591.2	0.028	1591.4	0.030	1591.6
0.028	1594.5	0.024	1593.2	0.023	1592.6	0.031	1594.0	0.028	1592.9	0.030	1593.3
0.028	1596.1	0.024	1595.2	0.023	1594.6	0.031	1596.9	0.028	1594.2	0.030	1595.3
0.028	1597.9	0.024	1597.2	0.024	1596.3	0.031	1597.9	0.028	1595.5	0.030	1597.2
0.028	1599.3	0.024	1599.0	0.024	1598.0	0.031	1599.3	0.028	1597.0	0.030	1598.8
0.028	1600.4	0.024	1600.7	0.024	1599.4	0.031	1600.5	0.028	1598.9	0.030	1600.4
0.028	1601.7	0.024	1602.2	0.024	1600.6	0.031	1602.0	0.028	1601.0	0.030	1601.7
0.028	1604.5	0.024	1603.4	0.024	1601.7	0.031	1603.5	0.028	1602.6	0.030	1602.8
0.028	1607.2	0.024	1604.6	0.024	1604.2	0.031	1605.4	0.028	1604.3	0.030	1604.6
0.028	1608.3	0.024	1606.7	0.024	1607.3	0.031	1607.4	0.028	1605.9	0.030	1607.6
0.028	1609.8	0.024	1609.9	0.024	1608.7	0.031	1609.0	0.028	1607.2	0.030	1609.7
0.028	1611.2	0.024	1611.5	0.024	1609.9	0.031	1610.8	0.028	1608.5	0.030	1610.8
0.028	1612.4	0.024	1612.7	0.024	1611.4	0.031	1612.2	0.028	1610.1	0.030	1612.2
0.028	1613.8	0.024	1614.1	0.024	1612.6	0.031	1613.3	0.028	1613.2	0.030	1613.5
0.028	1615.5	0.024	1615.3	0.024	1614.2	0.031	1614.8	0.028	1615.4	0.030	1615.1
0.028	1617.5	0.024	1616.7	0.024	1615.8	0.032	1617.8	0.028	1616.3	0.030	1616.6
0.028	1619.5	0.024	1618.3	0.024	1617.8	0.032	1620.2	0.028	1617.9	0.030	1618.6
0.028	1621.2	0.024	1620.3	0.024	1619.6	0.032	1621.1	0.028	1619.3	0.030	1620.5
0.028	1622.9	0.024	1622.3	0.024	1621.3	0.032	1622.5	0.028	1620.6	0.030	1622.1
0.028	1624.2	0.024	1623.9	0.024	1623.0	0.032	1623.7	0.028	1622.1	0.030	1623.7
0.029	1625.4	0.024	1625.7	0.024	1624.2	0.032	1625.2	0.028	1623.9	0.030	1625.0
0.029	1626.7	0.024	1627.2	0.024	1625.4	0.032	1626.8	0.028	1625.9	0.030	1626.2
0.029	1629.5	0.024	1628.3	0.024	1626.9	0.032	1628.8	0.028	1627.6	0.030	1627.8
0.029	1632.2	0.024	1629.5	0.024	1629.8	0.032	1630.8	0.028	1629.2	0.030	1630.9
0.029	1633.2	0.024	1631.9	0.024	1632.3	0.032	1632.5	0.028	1631.0	0.030	1633.2
0.029	1634.6	0.024	1635.0	0.024	1633.3	0.032	1634.2	0.028	1632.3	0.030	1634.2
0.029	1636.2	0.024	1636.2	0.024	1634.8	0.032	1635.4	0.028	1633.5	0.030	1635.7
0.029	1637.5	0.024	1637.5	0.024	1636.1	0.032	1636.5	0.028	1634.9	0.031	1636.9
0.029	1638.9	0.024	1639.0	0.024	1637.5	0.032	1638.1	0.029	1637.6	0.031	1638.3
0.029	1640.6	0.024	1640.3	0.024	1639.0	0.032	1641.2	0.029	1640.5	0.031	1640.0
0.029	1642.5	0.025	1641.7	0.024	1640.8	0.032	1643.5	0.029	1641.5	0.031	1641.9
0.029	1644.5	0.025	1643.5	0.024	1642.8	0.032	1644.4	0.029	1642.8	0.031	1643.8
0.029	1646.0	0.025	1645.4	0.024	1644.7	0.032	1645.8	0.029	1644.3	0.031	1645.4
0.029	1647.7	0.025	1647.3	0.024	1646.4	0.032	1647.1	0.029	1645.7	0.031	1647.1
0.029	1649.1	0.025	1648.9	0.025	1648.0	0.032	1648.5	0.029	1647.2	0.031	1648.4
0.029	1650.3	0.025	1650.6	0.025	1649.1	0.032	1650.1	0.029	1648.8	0.031	1649.6
0.029	1651.7	0.025	1652.0	0.025	1650.3	0.032	1652.2	0.029	1650.9	0.031	1651.1
0.029	1654.5	0.025	1653.3	0.025	1652.3	0.032	1654.1	0.029	1652.7	0.031	1654.1
0.029	1657.3	0.025	1654.5	0.025	1655.3	0.032	1655.7	0.029	1654.3	0.031	1656.6
0.029	1658.4	0.025	1656.9	0.025	1657.2	0.032	1657.5	0.029	1656.1	0.031	1657.6
0.029	1659.7	0.025	1660.0	0.025	1658.3	0.032	1658.7	0.029	1657.5	0.031	1658.9
0.029	1661.0	0.025	1661.3	0.025	1659.9	0.032	1659.7	0.029	1658.6	0.031	1660.2
0.029	1662.4	0.025	1662.5	0.025	1661.1	0.032	1661.4	0.029	1659.8	0.031	1661.7
0.029	1663.8	0.025	1664.1	0.025	1662.4	0.032	1664.7	0.029	1662.3	0.031	1663.1
0.029	1665.7	0.025	1665.3	0.025	1664.0	0.033	1666.8	0.029	1665.4	0.031	1665.1
0.029	1667.7	0.025	1666.8	0.025	1666.0	0.033	1667.8	0.029	1666.9	0.031	1667.1
0.029	1669.5	0.025	1668.4	0.025	1667.9	0.033	1669.2	0.029	1667.8	0.031	1668.7
0.029	1671.0	0.025	1670.3	0.025	1669.6	0.033	1670.5	0.029	1669.4	0.031	1670.4
0.029	1672.8	0.025	1672.2	0.025	1671.3	0.033	1671.9	0.029	1670.6	0.031	1671.9
0.029	1674.2	0.025	1673.8	0.025	1672.7	0.033	1673.6	0.029	1672.1	0.031	1673.1
0.029	1675.3	0.025	1675.6	0.025	1673.9	0.033	1675.4	0.029	1673.9	0.031	1674.4
0.029	1676.6	0.025	1677.0	0.025	1675.0	0.033	1677.4	0.029	1675.8	0.031	1677.1

0.030	1679.5	0.025	1678.3	0.025	1677.6	0.033	1679.1	0.029	1677.7	0.031	1679.9
0.030	1682.4	0.025	1679.5	0.025	1680.6	0.033	1680.7	0.029	1679.4	0.031	1681.0
0.030	1683.3	0.025	1681.7	0.025	1681.9	0.033	1682.0	0.029	1681.1	0.031	1682.3
0.030	1684.6	0.025	1685.0	0.025	1683.2	0.033	1683.2	0.029	1682.7	0.031	1683.6
0.030	1686.0	0.025	1686.5	0.025	1684.7	0.033	1684.8	0.029	1683.8	0.031	1685.1
0.030	1687.5	0.025	1687.6	0.025	1685.9	0.033	1688.0	0.029	1684.9	0.032	1686.5
0.030	1689.1	0.025	1689.1	0.025	1687.3	0.033	1690.2	0.029	1687.0	0.032	1688.5
0.030	1690.6	0.025	1690.2	0.025	1689.1	0.033	1691.1	0.029	1690.1	0.032	1690.5
0.030	1692.7	0.025	1691.8	0.025	1691.0	0.033	1692.6	0.029	1691.9	0.032	1692.1
0.030	1694.5	0.025	1693.4	0.025	1692.9	0.033	1693.7	0.030	1693.0	0.032	1693.8
0.030	1696.0	0.026	1695.4	0.025	1694.6	0.033	1695.2	0.030	1694.4	0.032	1695.3
0.030	1697.8	0.026	1697.4	0.025	1696.3	0.033	1696.8	0.030	1695.7	0.032	1696.5
0.030	1699.2	0.026	1699.0	0.025	1697.5	0.033	1698.8	0.030	1697.1	0.032	1697.7
0.030	1700.4	0.026	1700.7	0.026	1698.8	0.033	1700.9	0.030	1698.8	0.032	1700.1
0.030	1701.6	0.026	1702.2	0.026	1700.3	0.033	1702.3	0.030	1700.7	0.032	1703.2
0.030	1704.2	0.026	1703.4	0.026	1703.3	0.033	1704.1	0.030	1702.6	0.032	1704.6
0.030	1707.3	0.026	1704.5	0.026	1705.8	0.033	1705.5	0.030	1704.4	0.032	1705.6
0.030	1708.5	0.026	1706.7	0.026	1706.7	0.033	1706.6	0.030	1706.2	0.032	1707.1
0.030	1709.8	0.026	1709.9	0.026	1708.2	0.033	1708.2	0.030	1707.8	0.032	1708.5
0.030	1711.2	0.026	1711.5	0.026	1709.5	0.033	1711.1	0.030	1708.9	0.032	1710.0
0.030	1712.5	0.026	1712.5	0.026	1710.8	0.033	1713.5	0.030	1710.1	0.032	1711.7
0.030	1713.9	0.026	1714.0	0.026	1712.3	0.033	1714.5	0.030	1711.8	0.032	1713.8
0.030	1715.7	0.026	1715.3	0.026	1714.1	0.034	1715.9	0.030	1714.7	0.032	1715.5
0.030	1717.6	0.026	1716.8	0.026	1716.1	0.034	1717.1	0.030	1717.0	0.032	1717.2
0.030	1719.5	0.026	1718.4	0.026	1718.0	0.034	1718.5	0.030	1718.0	0.032	1718.8
0.030	1721.1	0.026	1720.3	0.026	1719.6	0.034	1720.1	0.030	1719.4	0.032	1719.9
0.030	1722.8	0.026	1722.3	0.026	1721.3	0.034	1722.3	0.030	1720.9	0.032	1721.0
0.030	1724.2	0.026	1724.0	0.026	1722.5	0.034	1724.2	0.030	1722.3	0.032	1723.1
0.030	1725.4	0.026	1725.7	0.026	1723.7	0.034	1725.7	0.030	1723.8	0.032	1726.4
0.030	1726.6	0.026	1727.1	0.026	1725.4	0.034	1727.4	0.030	1725.5	0.032	1728.1
0.030	1729.1	0.026	1728.3	0.026	1728.6	0.034	1728.8	0.030	1727.4	0.032	1729.1
0.030	1732.2	0.026	1729.5	0.026	1730.7	0.034	1729.9	0.030	1729.3	0.032	1730.5
0.031	1733.7	0.026	1731.6	0.026	1731.7	0.034	1731.4	0.030	1730.9	0.032	1731.7
0.031	1734.7	0.026	1734.9	0.026	1733.2	0.034	1734.6	0.030	1732.5	0.032	1733.2
0.031	1736.2	0.026	1736.6	0.026	1734.5	0.034	1736.9	0.030	1734.1	0.032	1734.9
0.031	1737.5	0.026	1737.6	0.026	1735.9	0.034	1737.9	0.030	1735.3	0.032	1737.0
0.031	1738.9	0.026	1739.2	0.026	1737.3	0.034	1739.2	0.030	1736.6	0.033	1738.8
0.031	1740.6	0.026	1740.3	0.026	1739.2	0.034	1740.5	0.030	1739.0	0.033	1740.5
0.031	1742.5	0.026	1741.8	0.026	1741.3	0.034	1741.9	0.030	1742.0	0.033	1742.2
0.031	1744.4	0.026	1743.4	0.026	1743.1	0.034	1743.4	0.030	1743.4	0.033	1743.5
0.031	1746.0	0.026	1745.3	0.026	1744.6	0.034	1745.4	0.030	1744.5	0.033	1744.6
0.031	1747.8	0.026	1747.2	0.026	1746.2	0.034	1747.4	0.030	1746.1	0.033	1746.1
0.031	1749.3	0.026	1748.9	0.026	1747.4	0.034	1748.9	0.031	1747.3	0.033	1748.9
0.031	1750.6	0.027	1750.6	0.026	1748.5	0.034	1750.8	0.031	1748.8	0.033	1751.5
0.031	1751.8	0.027	1752.2	0.026	1750.5	0.034	1752.2	0.031	1750.3	0.033	1752.5
0.031	1753.8	0.027	1753.4	0.027	1753.7	0.034	1753.3	0.031	1752.4	0.033	1754.0
0.031	1757.0	0.027	1754.6	0.027	1755.6	0.034	1754.8	0.031	1754.4	0.033	1755.2
0.031	1758.9	0.027	1756.5	0.027	1756.6	0.034	1757.6	0.031	1755.9	0.033	1756.6
0.031	1759.8	0.027	1759.7	0.027	1758.1	0.034	1760.1	0.031	1757.8	0.033	1758.2
0.031	1761.2	0.027	1761.7	0.027	1759.3	0.034	1761.1	0.031	1759.3	0.033	1760.2
0.031	1762.6	0.027	1762.7	0.027	1760.8	0.034	1762.6	0.031	1760.5	0.033	1762.2
0.031	1764.0	0.027	1764.1	0.027	1762.3	0.034	1763.8	0.031	1761.7	0.033	1763.6
0.031	1765.6	0.027	1765.3	0.027	1764.2	0.035	1765.2	0.031	1763.6	0.033	1765.4
0.031	1767.5	0.027	1766.8	0.027	1766.2	0.035	1766.8	0.031	1766.7	0.033	1766.9
0.031	1769.4	0.027	1768.3	0.027	1767.8	0.035	1768.8	0.031	1768.7	0.033	1768.1
0.031	1771.2	0.027	1770.3	0.027	1769.6	0.035	1770.7	0.031	1769.6	0.033	1769.2
0.031	1772.8	0.027	1772.3	0.027	1771.0	0.035	1772.3	0.031	1771.0	0.033	1771.8

0.031	1774.4	0.027	1773.9	0.027	1772.2	0.035	1774.3	0.031	1772.5	0.033	1774.9
0.031	1775.7	0.027	1775.7	0.027	1773.5	0.035	1775.7	0.031	1773.9	0.033	1776.1
0.031	1776.9	0.027	1777.3	0.027	1775.8	0.035	1776.8	0.031	1775.4	0.033	1777.3
0.031	1778.5	0.027	1778.5	0.027	1779.0	0.035	1777.9	0.031	1777.2	0.033	1778.8
0.031	1781.6	0.027	1779.8	0.027	1780.5	0.035	1780.7	0.031	1779.2	0.033	1780.1
0.031	1783.9	0.027	1781.4	0.027	1781.6	0.035	1783.6	0.031	1781.1	0.033	1781.6
0.031	1784.8	0.027	1784.4	0.027	1783.1	0.035	1784.6	0.031	1782.7	0.033	1783.4
0.032	1786.3	0.027	1786.7	0.027	1784.3	0.035	1785.9	0.031	1784.4	0.033	1785.3
0.032	1787.7	0.027	1787.6	0.027	1785.8	0.035	1787.3	0.031	1785.7	0.033	1787.2
0.032	1789.2	0.027	1789.1	0.027	1787.5	0.035	1788.7	0.031	1786.9	0.034	1788.9
0.032	1790.6	0.027	1790.5	0.027	1789.4	0.035	1790.2	0.031	1788.3	0.034	1790.4
0.032	1792.5	0.027	1791.9	0.027	1791.3	0.035	1792.0	0.031	1791.1	0.034	1791.7
0.032	1794.4	0.027	1793.4	0.027	1792.9	0.035	1794.0	0.031	1793.8	0.034	1792.8
0.032	1796.2	0.027	1795.3	0.027	1794.7	0.035	1795.8	0.031	1794.9	0.034	1794.7
0.032	1797.8	0.027	1797.2	0.027	1796.0	0.035	1797.5	0.031	1796.2	0.034	1797.9
0.032	1799.5	0.027	1799.0	0.027	1797.2	0.035	1799.0	0.031	1797.6	0.034	1799.9
0.032	1800.8	0.027	1800.5	0.027	1798.5	0.035	1800.1	0.031	1799.0	0.034	1800.8
0.032	1801.8	0.027	1802.3	0.027	1800.8	0.035	1801.2	0.031	1800.5	0.034	1802.3
0.032	1803.5	0.028	1803.5	0.027	1803.9	0.035	1803.6	0.032	1802.1	0.034	1803.5
0.032	1806.5	0.028	1804.7	0.028	1805.4	0.035	1806.8	0.032	1804.1	0.034	1805.0
0.032	1808.8	0.028	1806.3	0.028	1806.5	0.035	1808.1	0.032	1806.0	0.034	1806.5
0.032	1809.9	0.028	1809.2	0.028	1808.0	0.035	1809.3	0.032	1807.5	0.034	1808.5
0.032	1811.2	0.028	1811.8	0.028	1809.2	0.035	1810.7	0.032	1809.3	0.034	1810.6
0.032	1812.6	0.028	1812.6	0.028	1810.7	0.035	1812.0	0.032	1810.9	0.034	1812.0
0.032	1814.0	0.028	1814.1	0.028	1812.4	0.035	1813.6	0.032	1812.1	0.034	1813.9
0.032	1815.5	0.028	1815.5	0.028	1814.3	0.036	1815.3	0.032	1813.3	0.034	1815.2
0.032	1817.4	0.028	1816.9	0.028	1816.3	0.036	1817.2	0.032	1815.5	0.034	1816.4
0.032	1819.3	0.028	1818.5	0.028	1817.9	0.036	1819.1	0.032	1818.5	0.034	1817.7
0.032	1821.2	0.028	1820.3	0.028	1819.7	0.036	1820.9	0.032	1820.3	0.034	1820.2
0.032	1822.8	0.028	1822.1	0.028	1821.0	0.036	1822.4	0.032	1821.3	0.034	1823.2
0.032	1824.4	0.028	1824.0	0.028	1822.2	0.036	1823.5	0.032	1822.7	0.034	1824.4
0.032	1825.9	0.028	1825.5	0.028	1823.4	0.036	1824.6	0.032	1824.1	0.034	1825.5
0.032	1827.0	0.028	1827.3	0.028	1826.0	0.036	1826.8	0.032	1825.6	0.034	1827.0
0.032	1828.3	0.028	1828.6	0.028	1829.0	0.036	1830.1	0.032	1827.1	0.034	1828.3
0.032	1830.9	0.028	1829.8	0.028	1830.2	0.036	1831.6	0.032	1828.9	0.034	1829.8
0.032	1833.8	0.028	1831.3	0.028	1831.5	0.036	1832.8	0.032	1830.9	0.034	1831.7
0.032	1835.2	0.028	1834.0	0.028	1833.1	0.036	1834.1	0.032	1832.7	0.034	1833.6
0.032	1836.3	0.028	1836.7	0.028	1834.3	0.036	1835.3	0.032	1834.5	0.034	1835.6
0.032	1837.8	0.028	1837.9	0.028	1835.8	0.036	1836.9	0.032	1836.1	0.034	1837.1
0.032	1839.1	0.028	1839.1	0.028	1837.6	0.036	1838.5	0.032	1837.4	0.034	1838.7
0.033	1840.4	0.028	1840.5	0.028	1839.4	0.036	1840.5	0.032	1838.6	0.035	1839.9
0.033	1842.3	0.028	1841.8	0.028	1841.3	0.036	1842.4	0.032	1840.0	0.035	1841.1
0.033	1844.3	0.028	1843.3	0.028	1842.8	0.036	1844.1	0.032	1842.8	0.035	1843.0
0.033	1846.2	0.028	1845.2	0.028	1844.6	0.036	1845.9	0.032	1845.3	0.035	1846.4
0.033	1847.7	0.028	1847.1	0.028	1845.9	0.036	1847.0	0.032	1846.6	0.035	1848.2
0.033	1849.6	0.028	1849.0	0.028	1847.1	0.036	1848.2	0.032	1847.8	0.035	1849.1
0.033	1851.1	0.028	1850.6	0.028	1848.5	0.036	1849.9	0.032	1849.3	0.035	1850.5
0.033	1852.1	0.028	1852.4	0.028	1851.5	0.036	1853.1	0.032	1850.7	0.035	1851.8
0.033	1853.3	0.028	1853.8	0.028	1854.1	0.036	1855.0	0.032	1852.2	0.035	1853.2
0.033	1855.4	0.028	1854.9	0.028	1855.2	0.036	1856.1	0.032	1853.9	0.035	1854.8
0.033	1858.6	0.028	1856.1	0.028	1856.4	0.036	1857.7	0.032	1855.7	0.035	1856.8
0.033	1860.5	0.029	1858.4	0.029	1857.7	0.036	1858.9	0.033	1857.7	0.035	1858.7
0.033	1861.5	0.029	1861.6	0.029	1859.2	0.036	1860.2	0.033	1859.3	0.035	1860.2
0.033	1862.9	0.029	1863.1	0.029	1860.7	0.036	1861.7	0.033	1861.1	0.035	1862.1
0.033	1864.2	0.029	1864.2	0.029	1862.5	0.036	1863.8	0.033	1862.5	0.035	1863.7
0.033	1865.8	0.029	1865.6	0.029	1864.5	0.036	1865.7	0.033	1863.8	0.035	1864.7
0.033	1867.3	0.029	1867.0	0.029	1866.3	0.037	1867.4	0.033	1865.0	0.035	1866.1

0.033	1869.1	0.029	1868.4	0.029	1867.9	0.037	1869.0	0.033	1866.8	0.035	1868.5
0.033	1871.0	0.029	1870.2	0.029	1869.6	0.037	1870.4	0.033	1869.7	0.035	1871.7
0.033	1872.9	0.029	1872.1	0.029	1870.9	0.037	1871.7	0.033	1872.1	0.035	1872.8
0.033	1874.4	0.029	1874.1	0.029	1872.1	0.037	1872.9	0.033	1873.0	0.035	1873.9
0.033	1876.1	0.029	1875.5	0.029	1873.6	0.037	1875.7	0.033	1874.5	0.035	1875.3
0.033	1877.4	0.029	1877.5	0.029	1876.4	0.037	1878.5	0.033	1875.9	0.035	1876.6
0.033	1878.6	0.029	1879.0	0.029	1879.1	0.037	1879.5	0.033	1877.3	0.035	1878.2
0.033	1880.2	0.029	1880.1	0.029	1880.0	0.037	1881.0	0.033	1878.9	0.035	1879.9
0.033	1883.1	0.029	1881.1	0.029	1881.4	0.037	1882.3	0.033	1880.5	0.035	1882.0
0.033	1885.6	0.029	1883.2	0.029	1882.8	0.037	1883.7	0.033	1882.5	0.035	1883.8
0.033	1886.6	0.029	1886.4	0.029	1884.3	0.037	1885.1	0.033	1884.4	0.035	1885.7
0.033	1888.0	0.029	1888.3	0.029	1885.7	0.037	1887.0	0.033	1886.0	0.035	1887.2
0.033	1889.4	0.029	1889.3	0.029	1887.6	0.037	1888.9	0.033	1887.7	0.035	1888.5
0.033	1890.7	0.029	1890.8	0.029	1889.6	0.037	1890.8	0.033	1889.1	0.035	1889.4
0.033	1892.2	0.029	1892.1	0.029	1891.4	0.037	1892.5	0.033	1890.3	0.035	1891.2
0.033	1894.0	0.029	1893.5	0.029	1892.8	0.037	1894.0	0.033	1891.5	0.036	1894.4
0.034	1896.1	0.029	1895.1	0.029	1894.5	0.037	1895.0	0.033	1894.0	0.036	1896.6
0.034	1897.9	0.029	1897.0	0.029	1895.8	0.037	1896.2	0.033	1897.0	0.036	1897.4
0.034	1899.3	0.029	1899.0	0.029	1897.0	0.037	1898.7	0.033	1898.5	0.036	1898.9
0.034	1901.3	0.029	1900.6	0.029	1898.7	0.037	1902.0	0.033	1899.6	0.036	1900.2
0.034	1902.7	0.029	1902.3	0.029	1901.6	0.037	1903.1	0.033	1901.2	0.036	1901.7
0.034	1903.8	0.029	1904.0	0.029	1904.1	0.037	1904.4	0.033	1902.4	0.036	1903.2
0.034	1904.9	0.029	1905.1	0.029	1905.0	0.037	1905.7	0.033	1903.9	0.036	1905.1
0.034	1907.3	0.029	1906.3	0.029	1906.4	0.037	1907.0	0.033	1905.3	0.036	1907.1
0.034	1910.5	0.029	1908.1	0.029	1907.8	0.037	1908.4	0.033	1907.3	0.036	1908.7
0.034	1912.0	0.029	1911.3	0.029	1909.3	0.037	1910.2	0.033	1909.2	0.036	1910.5
0.034	1912.9	0.030	1913.4	0.030	1910.8	0.037	1912.2	0.033	1911.1	0.036	1911.9
0.034	1914.5	0.030	1914.3	0.030	1912.6	0.037	1914.1	0.034	1912.8	0.036	1913.1
0.034	1915.7	0.030	1915.7	0.030	1914.5	0.037	1915.7	0.034	1914.4	0.036	1914.2
0.034	1917.3	0.030	1917.1	0.030	1916.3	0.038	1917.5	0.034	1915.6	0.036	1916.6
0.034	1918.8	0.030	1918.6	0.030	1917.8	0.038	1918.6	0.034	1916.8	0.036	1919.8
0.034	1920.8	0.030	1919.9	0.030	1919.6	0.038	1919.8	0.034	1918.4	0.036	1921.3
0.034	1922.7	0.030	1921.8	0.030	1920.8	0.038	1921.6	0.034	1921.1	0.036	1922.4
0.034	1924.6	0.030	1923.9	0.030	1921.9	0.038	1924.9	0.034	1923.6	0.036	1923.8
0.034	1926.2	0.030	1925.7	0.030	1923.8	0.038	1926.7	0.034	1924.7	0.036	1925.0
0.034	1927.8	0.030	1927.2	0.030	1926.9	0.038	1927.7	0.034	1926.2	0.036	1926.6
0.034	1929.1	0.030	1929.0	0.030	1929.0	0.038	1929.3	0.034	1927.6	0.036	1928.3
0.034	1930.2	0.030	1930.3	0.030	1929.9	0.038	1930.5	0.034	1929.0	0.036	1930.2
0.034	1931.8	0.030	1931.5	0.030	1931.4	0.038	1931.9	0.034	1930.4	0.036	1932.2
0.034	1934.8	0.030	1932.8	0.030	1932.6	0.038	1933.4	0.034	1932.1	0.036	1933.7
0.034	1937.2	0.030	1935.5	0.030	1934.1	0.038	1935.4	0.034	1934.1	0.036	1935.5
0.034	1938.4	0.030	1938.4	0.030	1935.6	0.038	1937.4	0.034	1936.0	0.036	1936.8
0.034	1939.6	0.030	1939.5	0.030	1937.5	0.038	1939.2	0.034	1937.5	0.036	1938.0
0.034	1941.1	0.030	1940.7	0.030	1939.5	0.038	1940.7	0.034	1939.3	0.036	1939.3
0.034	1942.4	0.030	1942.3	0.030	1941.4	0.038	1942.2	0.034	1940.8	0.036	1942.2
0.034	1943.9	0.030	1943.6	0.030	1942.9	0.038	1943.4	0.034	1942.0	0.036	1944.8
0.034	1945.5	0.030	1945.1	0.030	1944.6	0.038	1944.7	0.034	1943.2	0.037	1946.0
0.034	1947.5	0.030	1946.7	0.030	1945.8	0.038	1947.4	0.034	1945.3	0.037	1947.4
0.034	1949.4	0.030	1948.8	0.030	1947.0	0.038	1950.2	0.034	1948.4	0.037	1948.7
0.035	1951.0	0.030	1950.7	0.030	1948.7	0.038	1951.3	0.034	1950.3	0.037	1950.1
0.035	1952.9	0.030	1952.2	0.030	1951.7	0.038	1952.6	0.034	1951.3	0.037	1951.6
0.035	1954.4	0.030	1953.9	0.030	1953.9	0.038	1953.9	0.034	1952.9	0.037	1953.3
0.035	1955.6	0.030	1955.6	0.030	1954.8	0.038	1955.3	0.034	1954.2	0.037	1955.4
0.035	1956.8	0.030	1956.7	0.030	1956.3	0.038	1956.9	0.034	1955.6	0.037	1957.3
0.035	1958.9	0.030	1957.8	0.030	1957.7	0.038	1958.7	0.034	1957.1	0.037	1959.0
0.035	1961.9	0.030	1960.0	0.030	1959.2	0.038	1960.6	0.034	1959.0	0.037	1960.6
0.035	1963.9	0.030	1963.2	0.030	1960.7	0.038	1962.4	0.034	1960.8	0.037	1961.7

0.035	1964.8	0.030	1964.9	0.030	1962.5	0.038	1964.0	0.034	1962.8	0.037	1962.9
0.035	1966.2	0.030	1966.0	0.031	1964.5	0.038	1965.7	0.034	1964.3	0.037	1964.6
0.035	1967.6	0.031	1967.4	0.031	1966.2	0.038	1966.9	0.034	1966.1	0.037	1967.6
0.035	1969.0	0.031	1968.8	0.031	1968.0	0.039	1968.1	0.034	1967.4	0.037	1969.8
0.035	1970.5	0.031	1970.2	0.031	1969.6	0.039	1970.0	0.035	1968.6	0.037	1970.8
0.035	1972.4	0.031	1971.6	0.031	1970.8	0.039	1973.4	0.035	1969.9	0.037	1972.4
0.035	1974.3	0.031	1973.7	0.031	1972.0	0.039	1975.2	0.035	1972.5	0.037	1973.6
0.035	1976.2	0.031	1975.6	0.031	1973.5	0.039	1976.1	0.035	1975.5	0.037	1975.1
0.035	1977.9	0.031	1977.2	0.031	1976.5	0.039	1977.5	0.035	1976.8	0.037	1976.5
0.035	1979.6	0.031	1979.0	0.031	1979.0	0.039	1978.6	0.035	1978.0	0.037	1978.4
0.035	1980.9	0.031	1980.7	0.031	1980.0	0.039	1980.3	0.035	1979.5	0.037	1980.4
0.035	1982.1	0.031	1982.0	0.031	1981.4	0.039	1981.9	0.035	1980.7	0.037	1982.2
0.035	1983.4	0.031	1983.1	0.031	1982.8	0.039	1983.8	0.035	1982.2	0.037	1983.8
0.035	1986.1	0.031	1984.7	0.031	1984.2	0.039	1985.8	0.035	1983.7	0.037	1985.3
0.035	1988.9	0.031	1987.6	0.031	1985.8	0.039	1987.3	0.035	1985.7	0.037	1986.4
0.035	1990.3	0.031	1990.1	0.031	1987.5	0.039	1989.2	0.035	1987.7	0.037	1987.6
0.035	1991.4	0.031	1991.1	0.031	1989.4	0.039	1990.5	0.035	1989.4	0.037	1990.1
0.035	1992.9	0.031	1992.4	0.031	1991.3	0.039	1991.5	0.035	1991.0	0.037	1993.1
0.035	1994.2	0.031	1993.8	0.031	1992.9	0.039	1993.1	0.035	1992.7	0.037	1994.7
0.035	1995.7	0.031	1995.2	0.031	1994.5	0.039	1996.0	0.035	1994.0	0.037	1995.7
0.035	1997.2	0.031	1996.7	0.031	1995.9	0.039	1998.5	0.035	1995.2	0.038	1997.2
0.035	1999.2	0.031	1998.5	0.031	1997.1	0.039	1999.4	0.035	1996.7	0.038	1998.4
0.035	2001.2	0.031	2000.5	0.031	1998.7	0.039	2000.9	0.035	1999.7	0.038	1999.9
0.035	2002.8	0.031	2002.4	0.031	2001.4	0.039	2002.2	0.035	2002.0	0.038	2001.6
0.035	2004.5	0.031	2003.9	0.031	2004.2	0.039	2003.6	0.035	2003.1	0.038	2003.5
0.035	2006.1	0.031	2005.7	0.031	2005.1	0.039	2005.2	0.035	2004.5	0.038	2005.5
0.036	2007.3	0.031	2007.1	0.031	2006.4	0.039	2006.9	0.035	2006.0	0.038	2007.0
0.036	2008.6	0.031	2008.1	0.031	2007.9	0.039	2009.0	0.035	2007.3	0.038	2008.8
0.036	2010.1	0.031	2009.5	0.031	2009.1	0.039	2010.8	0.035	2008.8	0.038	2010.2
0.036	2013.0	0.031	2012.3	0.031	2010.6	0.039	2012.3	0.035	2010.4	0.038	2011.3
0.036	2015.5	0.031	2015.0	0.031	2012.6	0.039	2013.9	0.035	2012.3	0.038	2012.8
0.036	2016.5	0.031	2016.2	0.031	2014.6	0.039	2015.1	0.035	2014.4	0.038	2015.8
0.036	2017.9	0.031	2017.5	0.031	2016.4	0.039	2016.2	0.035	2016.1	0.038	2018.2
0.036	2019.4	0.031	2018.9	0.032	2017.8	0.039	2018.5	0.035	2017.7	0.038	2019.2
0.036	2020.8	0.032	2020.3	0.032	2019.6	0.040	2021.8	0.035	2019.3	0.038	2020.7
0.036	2022.4	0.032	2021.8	0.032	2021.1	0.040	2023.2	0.035	2020.4	0.038	2022.0
0.036	2023.9	0.032	2023.4	0.032	2022.2	0.040	2024.4	0.035	2021.6	0.038	2023.3
0.036	2025.8	0.032	2025.3	0.032	2023.5	0.040	2025.9	0.036	2023.5	0.038	2024.8
0.036	2027.7	0.032	2027.2	0.032	2026.0	0.040	2027.2	0.036	2026.6	0.038	2026.7
0.036	2029.3	0.032	2028.9	0.032	2029.0	0.040	2028.6	0.036	2028.7	0.038	2028.7
0.036	2031.2	0.032	2030.7	0.032	2030.3	0.040	2030.3	0.036	2029.6	0.038	2030.5
0.036	2032.7	0.032	2032.2	0.032	2031.3	0.040	2032.2	0.036	2031.1	0.038	2032.1
0.036	2033.8	0.032	2033.4	0.032	2032.8	0.040	2034.1	0.036	2032.6	0.038	2033.8
0.036	2035.1	0.032	2034.5	0.032	2034.2	0.040	2035.6	0.036	2033.9	0.038	2035.1
0.036	2037.0	0.032	2036.5	0.032	2035.6	0.040	2037.4	0.036	2035.6	0.038	2036.2
0.036	2040.0	0.032	2039.6	0.032	2037.5	0.040	2038.9	0.036	2037.2	0.038	2037.9
0.036	2042.2	0.032	2041.7	0.032	2039.5	0.040	2040.0	0.036	2039.0	0.038	2041.1
0.036	2043.1	0.032	2042.6	0.032	2041.3	0.040	2041.2	0.036	2041.0	0.038	2043.1
0.036	2044.5	0.032	2044.1	0.032	2042.9	0.040	2044.0	0.036	2042.5	0.038	2044.0
0.036	2046.0	0.032	2045.5	0.032	2044.6	0.040	2046.9	0.036	2044.3	0.038	2045.7
0.036	2047.3	0.032	2046.9	0.032	2046.0	0.040	2048.0	0.036	2045.7	0.038	2046.9
0.036	2048.9	0.032	2048.5	0.032	2047.3	0.040	2049.3	0.036	2047.1	0.039	2048.3
0.036	2050.6	0.032	2050.2	0.032	2048.4	0.040	2050.6	0.036	2048.3	0.039	2049.7
0.036	2052.5	0.032	2052.1	0.032	2051.0	0.040	2052.0	0.036	2050.4	0.039	2051.7
0.036	2054.5	0.032	2054.0	0.032	2054.0	0.040	2053.4	0.036	2053.6	0.039	2053.8
0.036	2056.1	0.032	2055.6	0.032	2055.2	0.040	2055.3	0.036	2055.4	0.039	2055.5
0.036	2057.9	0.032	2057.3	0.032	2056.5	0.040	2057.4	0.036	2056.4	0.039	2057.0

0.036	2059.4	0.032	2058.6	0.032	2057.9	0.040	2059.2	0.036	2058.0	0.039	2058.8
0.036	2060.6	0.032	2059.9	0.032	2059.2	0.040	2060.8	0.036	2059.1	0.039	2059.8
0.036	2061.8	0.032	2061.1	0.032	2060.7	0.040	2062.4	0.036	2060.6	0.039	2061.0
0.037	2063.8	0.032	2063.7	0.032	2062.3	0.040	2063.7	0.036	2062.1	0.039	2063.1
0.037	2066.8	0.032	2066.8	0.032	2064.4	0.040	2064.9	0.036	2063.9	0.039	2066.4
0.037	2068.7	0.032	2068.1	0.032	2066.3	0.040	2066.5	0.036	2065.9	0.039	2068.1
0.037	2069.8	0.032	2069.2	0.032	2067.8	0.040	2069.7	0.036	2067.8	0.039	2069.1
0.037	2071.2	0.032	2070.7	0.032	2069.6	0.040	2071.7	0.036	2069.3	0.039	2070.7
0.037	2072.8	0.032	2072.0	0.033	2071.3	0.041	2072.7	0.036	2071.0	0.039	2071.9
0.037	2074.2	0.032	2073.5	0.033	2072.3	0.041	2074.3	0.036	2072.3	0.039	2073.4
0.037	2075.6	0.032	2075.0	0.033	2073.5	0.041	2075.4	0.036	2073.6	0.039	2074.8
0.037	2077.3	0.033	2077.0	0.033	2075.8	0.041	2076.9	0.036	2074.9	0.039	2076.9
0.037	2079.2	0.033	2078.9	0.033	2078.9	0.041	2078.4	0.036	2077.5	0.039	2078.8
0.037	2081.1	0.033	2080.6	0.033	2080.5	0.041	2080.5	0.037	2080.5	0.039	2080.4
0.037	2082.8	0.033	2082.5	0.033	2081.5	0.041	2082.5	0.037	2081.7	0.039	2082.1
0.037	2084.5	0.033	2084.0	0.033	2083.0	0.041	2084.1	0.037	2083.0	0.039	2083.6
0.037	2086.0	0.033	2085.1	0.033	2084.3	0.041	2085.7	0.037	2084.4	0.039	2084.8
0.037	2087.3	0.033	2086.3	0.033	2085.8	0.041	2087.3	0.037	2085.7	0.039	2086.0
0.037	2088.7	0.033	2088.2	0.033	2087.4	0.041	2088.4	0.037	2087.3	0.039	2088.7
0.037	2090.1	0.033	2091.3	0.033	2089.3	0.041	2089.6	0.037	2088.8	0.039	2091.6
0.037	2093.1	0.033	2093.2	0.033	2091.3	0.041	2091.9	0.037	2090.7	0.039	2092.8
0.037	2095.6	0.033	2094.2	0.033	2092.9	0.041	2095.1	0.037	2092.6	0.039	2094.0
0.037	2096.7	0.033	2095.8	0.033	2094.7	0.041	2096.6	0.037	2094.4	0.039	2095.5
0.037	2098.0	0.033	2097.2	0.033	2096.2	0.041	2097.6	0.037	2096.0	0.039	2096.6
0.037	2099.7	0.033	2098.6	0.033	2097.5	0.041	2099.1	0.037	2097.6	0.039	2098.3
0.037	2100.9	0.033	2100.0	0.033	2098.5	0.041	2100.3	0.037	2099.0	0.039	2100.0
0.037	2102.3	0.033	2101.9	0.033	2100.6	0.041	2101.9	0.037	2100.1	0.040	2102.0
0.037	2103.9	0.033	2103.8	0.033	2103.7	0.041	2103.5	0.037	2101.7	0.040	2103.9
0.037	2105.7	0.033	2105.7	0.033	2105.6	0.041	2105.5	0.037	2104.7	0.040	2105.4
0.037	2107.7	0.033	2107.3	0.033	2106.5	0.041	2107.3	0.037	2107.0	0.040	2107.1
0.037	2109.6	0.033	2108.9	0.033	2108.0	0.041	2108.9	0.037	2108.0	0.040	2108.4
0.037	2111.3	0.033	2110.2	0.033	2109.4	0.041	2110.8	0.037	2109.6	0.040	2109.6
0.037	2112.8	0.033	2111.5	0.033	2110.9	0.041	2112.1	0.037	2111.1	0.040	2111.0
0.037	2114.0	0.033	2112.8	0.033	2112.3	0.041	2113.3	0.037	2112.3	0.040	2113.7
0.037	2115.4	0.033	2115.3	0.033	2114.3	0.041	2114.6	0.037	2113.8	0.040	2116.5
0.037	2116.7	0.033	2118.3	0.033	2116.2	0.041	2117.3	0.037	2115.6	0.040	2117.5
0.037	2119.5	0.033	2119.6	0.033	2118.0	0.041	2120.3	0.037	2117.5	0.040	2118.8
0.038	2122.2	0.033	2120.8	0.033	2119.6	0.041	2121.3	0.037	2119.4	0.040	2120.4
0.038	2123.4	0.033	2122.4	0.033	2121.2	0.041	2122.5	0.037	2120.9	0.040	2121.8
0.038	2124.7	0.033	2123.7	0.033	2122.4	0.042	2123.9	0.037	2122.6	0.040	2123.4
0.038	2126.2	0.033	2125.1	0.033	2123.7	0.042	2125.3	0.037	2124.1	0.040	2125.0
0.038	2127.5	0.033	2126.7	0.034	2125.3	0.042	2126.7	0.037	2125.5	0.040	2127.0
0.038	2128.9	0.033	2128.6	0.034	2128.3	0.042	2128.6	0.037	2126.6	0.040	2128.9
0.038	2130.5	0.033	2130.6	0.034	2130.7	0.042	2130.6	0.037	2128.6	0.040	2130.4
0.038	2132.3	0.034	2132.2	0.034	2131.6	0.042	2132.5	0.037	2131.7	0.040	2132.0
0.038	2134.3	0.034	2134.0	0.034	2133.2	0.042	2134.1	0.037	2133.7	0.040	2133.4
0.038	2136.1	0.034	2135.5	0.034	2134.6	0.042	2135.8	0.037	2134.7	0.040	2134.6
0.038	2137.8	0.034	2136.7	0.034	2135.9	0.042	2137.2	0.038	2136.2	0.040	2136.0
0.038	2139.6	0.034	2138.0	0.034	2137.5	0.042	2138.2	0.038	2137.5	0.040	2139.0
0.038	2140.8	0.034	2139.7	0.034	2139.1	0.042	2139.7	0.038	2139.0	0.040	2141.5
0.038	2141.9	0.034	2142.9	0.034	2141.1	0.042	2142.7	0.038	2140.4	0.040	2142.6
0.038	2143.4	0.034	2145.1	0.034	2142.9	0.042	2145.2	0.038	2142.2	0.040	2144.1
0.038	2146.3	0.034	2145.9	0.034	2144.4	0.042	2146.1	0.038	2144.2	0.040	2145.4
0.038	2148.8	0.034	2147.5	0.034	2146.3	0.042	2147.5	0.038	2146.2	0.040	2146.8
0.038	2149.9	0.034	2148.9	0.034	2147.7	0.042	2148.9	0.038	2147.5	0.040	2148.3
0.038	2151.3	0.034	2150.2	0.034	2148.9	0.042	2150.4	0.038	2149.3	0.040	2150.1
0.038	2152.9	0.034	2151.7	0.034	2150.1	0.042	2151.9	0.038	2150.9	0.040	2152.0

0.038	2154.2	0.034	2153.5	0.034	2152.7	0.042	2153.8	0.038	2152.1	0.041	2153.8
0.038	2155.7	0.034	2155.4	0.034	2155.6	0.042	2155.7	0.038	2153.4	0.041	2155.4
0.038	2157.1	0.034	2157.3	0.034	2157.0	0.042	2157.4	0.038	2155.5	0.041	2157.1
0.038	2159.1	0.034	2158.8	0.034	2158.1	0.042	2159.2	0.038	2158.6	0.041	2158.3
0.038	2161.1	0.034	2160.7	0.034	2159.6	0.042	2160.8	0.038	2160.3	0.041	2159.6
0.038	2162.9	0.034	2162.2	0.034	2160.9	0.042	2161.9	0.038	2161.3	0.041	2161.2
0.038	2164.5	0.034	2163.4	0.034	2162.4	0.042	2163.0	0.038	2162.8	0.041	2164.4
0.038	2166.1	0.034	2164.4	0.034	2163.8	0.042	2164.8	0.038	2164.1	0.041	2166.7
0.038	2167.4	0.034	2166.8	0.034	2165.9	0.042	2168.2	0.038	2165.6	0.041	2167.5
0.038	2168.6	0.034	2169.9	0.034	2167.9	0.042	2170.1	0.038	2167.1	0.041	2169.0
0.038	2170.1	0.034	2171.5	0.034	2169.6	0.042	2171.1	0.038	2169.0	0.041	2170.2
0.038	2173.2	0.034	2172.5	0.034	2171.4	0.042	2172.6	0.038	2170.9	0.041	2171.7
0.038	2175.5	0.034	2174.1	0.034	2172.9	0.042	2173.8	0.038	2172.7	0.041	2173.1
0.038	2176.5	0.034	2175.3	0.034	2174.0	0.042	2175.3	0.038	2174.2	0.041	2175.1
0.039	2178.0	0.034	2176.9	0.034	2175.3	0.043	2176.9	0.038	2176.0	0.041	2177.2
0.039	2179.5	0.034	2178.4	0.034	2177.3	0.043	2178.9	0.038	2177.5	0.041	2178.8
0.039	2180.8	0.034	2180.2	0.034	2180.2	0.043	2180.7	0.038	2178.6	0.041	2180.6
0.039	2182.4	0.034	2182.3	0.035	2182.2	0.043	2182.4	0.038	2179.9	0.041	2182.1
0.039	2183.9	0.034	2184.1	0.035	2183.3	0.043	2184.0	0.038	2182.3	0.041	2183.3
0.039	2185.9	0.034	2185.5	0.035	2184.8	0.043	2185.7	0.038	2185.4	0.041	2184.6
0.039	2187.8	0.035	2187.3	0.035	2186.2	0.043	2186.9	0.038	2186.8	0.041	2186.4
0.039	2189.4	0.035	2188.7	0.035	2187.6	0.043	2187.9	0.038	2187.9	0.041	2189.5
0.039	2191.1	0.035	2189.8	0.035	2189.1	0.043	2190.1	0.038	2189.4	0.041	2191.5
0.039	2192.6	0.035	2191.3	0.035	2191.0	0.043	2193.3	0.038	2190.7	0.041	2192.2
0.039	2194.0	0.035	2194.3	0.035	2192.9	0.043	2195.1	0.039	2192.3	0.041	2193.9
0.039	2195.1	0.035	2196.7	0.035	2194.7	0.043	2196.0	0.039	2193.8	0.041	2195.2
0.039	2197.0	0.035	2197.7	0.035	2196.3	0.043	2197.5	0.039	2195.6	0.041	2196.7
0.039	2200.3	0.035	2199.1	0.035	2197.8	0.043	2198.7	0.039	2197.7	0.041	2198.2
0.039	2202.4	0.035	2200.7	0.035	2199.2	0.043	2200.2	0.039	2199.4	0.041	2200.3
0.039	2203.1	0.035	2202.0	0.035	2200.4	0.043	2201.9	0.039	2201.0	0.041	2202.2
0.039	2204.7	0.035	2203.6	0.035	2202.0	0.043	2203.9	0.039	2202.6	0.041	2203.8
0.039	2206.0	0.035	2205.1	0.035	2205.1	0.043	2205.8	0.039	2204.0	0.041	2205.4
0.039	2207.4	0.035	2207.0	0.035	2207.5	0.043	2207.3	0.039	2205.2	0.042	2206.9
0.039	2208.9	0.035	2208.9	0.035	2208.3	0.043	2209.1	0.039	2206.6	0.042	2208.2
0.039	2210.7	0.035	2210.5	0.035	2209.8	0.043	2210.6	0.039	2209.2	0.042	2209.5
0.039	2212.6	0.035	2212.3	0.035	2211.2	0.043	2211.8	0.039	2212.1	0.042	2211.5
0.039	2214.5	0.035	2213.7	0.035	2212.6	0.043	2212.9	0.039	2213.5	0.042	2214.5
0.039	2216.0	0.035	2215.0	0.035	2214.0	0.043	2215.3	0.039	2214.5	0.042	2216.3
0.039	2217.9	0.035	2216.3	0.035	2215.8	0.043	2218.4	0.039	2216.0	0.042	2217.4
0.039	2219.4	0.035	2218.0	0.035	2217.6	0.043	2220.0	0.039	2217.3	0.042	2219.0
0.039	2220.5	0.035	2221.3	0.035	2219.6	0.043	2220.9	0.039	2218.8	0.042	2220.2
0.039	2221.6	0.035	2223.4	0.035	2221.3	0.043	2222.5	0.039	2220.4	0.042	2221.6
0.039	2223.7	0.035	2224.3	0.035	2222.9	0.043	2223.7	0.039	2222.3	0.042	2223.2
0.039	2226.8	0.035	2225.7	0.035	2224.3	0.043	2225.2	0.039	2224.3	0.042	2225.1
0.039	2228.7	0.035	2227.0	0.035	2225.6	0.043	2226.8	0.039	2226.1	0.042	2227.2
0.039	2229.7	0.035	2228.5	0.035	2226.8	0.043	2229.0	0.039	2227.6	0.042	2228.7
0.039	2231.3	0.035	2230.1	0.035	2229.4	0.044	2230.9	0.039	2229.3	0.042	2230.5
0.039	2232.6	0.035	2231.8	0.035	2232.4	0.044	2232.3	0.039	2230.6	0.042	2232.0
0.040	2234.1	0.035	2233.8	0.035	2233.6	0.044	2234.1	0.039	2231.9	0.042	2233.3
0.040	2235.6	0.035	2235.7	0.036	2234.8	0.044	2235.7	0.039	2233.2	0.042	2234.3
0.040	2237.2	0.035	2237.2	0.036	2236.3	0.044	2236.8	0.039	2236.0	0.042	2236.6
0.040	2239.2	0.035	2239.0	0.036	2237.6	0.044	2237.9	0.039	2238.7	0.042	2239.8
0.040	2241.1	0.035	2240.4	0.036	2239.0	0.044	2240.4	0.039	2239.9	0.042	2241.4
0.040	2242.7	0.036	2241.6	0.036	2240.6	0.044	2243.3	0.039	2241.2	0.042	2242.2
0.040	2244.4	0.036	2242.8	0.036	2242.5	0.044	2244.8	0.039	2242.7	0.042	2243.8
0.040	2245.9	0.036	2245.1	0.036	2244.6	0.044	2246.0	0.039	2244.0	0.042	2245.1
0.040	2247.2	0.036	2248.3	0.036	2246.2	0.044	2247.4	0.039	2245.5	0.042	2246.6

0.040	2248.3	0.036	2249.7	0.036	2248.0	0.044	2248.7	0.039	2247.2	0.042	2248.3
0.040	2250.4	0.036	2250.8	0.036	2249.6	0.044	2250.3	0.040	2249.1	0.042	2250.2
0.040	2253.5	0.036	2252.4	0.036	2250.8	0.044	2252.1	0.040	2251.1	0.042	2252.2
0.040	2255.4	0.036	2253.6	0.036	2251.9	0.044	2254.0	0.040	2252.7	0.042	2253.8
0.040	2256.4	0.036	2255.3	0.036	2253.7	0.044	2255.7	0.040	2254.5	0.042	2255.6
0.040	2257.9	0.036	2256.8	0.036	2256.9	0.044	2257.4	0.040	2256.1	0.042	2257.2
0.040	2259.4	0.036	2258.6	0.036	2259.0	0.044	2259.1	0.040	2257.2	0.042	2258.3
0.040	2260.8	0.036	2260.6	0.036	2259.9	0.044	2260.5	0.040	2258.4	0.043	2259.3
0.040	2262.3	0.036	2262.4	0.036	2261.4	0.044	2261.7	0.040	2260.1	0.043	2261.5
0.040	2264.0	0.036	2263.9	0.036	2262.8	0.044	2262.9	0.040	2262.9	0.043	2264.7
0.040	2265.9	0.036	2265.5	0.036	2264.1	0.044	2265.7	0.040	2265.3	0.043	2266.3
0.040	2267.8	0.036	2267.0	0.036	2265.7	0.044	2268.4	0.040	2266.5	0.043	2267.4
0.040	2269.4	0.036	2268.2	0.036	2267.4	0.044	2269.6	0.040	2267.9	0.043	2268.8
0.040	2271.2	0.036	2269.5	0.036	2269.6	0.044	2270.7	0.040	2269.4	0.043	2270.2
0.040	2272.7	0.036	2272.4	0.036	2271.4	0.044	2272.3	0.040	2270.6	0.043	2271.6
0.040	2274.0	0.036	2275.1	0.036	2272.8	0.044	2273.7	0.040	2272.2	0.043	2273.2
0.040	2275.0	0.036	2276.2	0.036	2274.5	0.044	2275.1	0.040	2273.9	0.043	2275.2
0.040	2277.1	0.036	2277.6	0.036	2275.9	0.044	2276.9	0.040	2275.8	0.043	2277.3
0.040	2280.3	0.036	2279.1	0.036	2277.2	0.044	2278.9	0.040	2277.7	0.043	2278.7
0.040	2282.3	0.036	2280.3	0.036	2278.6	0.044	2280.8	0.040	2279.2	0.043	2280.5
0.040	2283.2	0.036	2281.8	0.036	2281.1	0.044	2282.4	0.040	2281.0	0.043	2282.0
0.040	2284.7	0.036	2283.5	0.036	2284.1	0.045	2284.4	0.040	2282.6	0.043	2283.1
0.040	2286.0	0.036	2285.3	0.036	2285.3	0.045	2285.6	0.040	2283.8	0.043	2284.2
0.040	2287.5	0.036	2287.3	0.036	2286.5	0.045	2286.7	0.040	2285.2	0.043	2286.5
0.040	2288.8	0.036	2288.9	0.036	2288.1	0.045	2287.9	0.040	2286.8	0.043	2289.8
0.041	2290.7	0.036	2290.7	0.037	2289.3	0.045	2290.8	0.040	2289.8	0.043	2291.4
0.041	2292.7	0.036	2292.2	0.037	2290.9	0.045	2293.4	0.040	2292.0	0.043	2292.3
0.041	2294.6	0.036	2293.4	0.037	2292.3	0.045	2294.5	0.040	2293.2	0.043	2293.9
0.041	2296.1	0.036	2294.6	0.037	2294.4	0.045	2295.8	0.040	2294.5	0.043	2295.2
0.041	2297.9	0.036	2296.5	0.037	2296.3	0.045	2297.3	0.040	2296.1	0.043	2296.7
0.041	2299.4	0.037	2299.7	0.037	2298.0	0.045	2298.7	0.040	2297.3	0.043	2298.3
0.041	2300.6	0.037	2301.6	0.037	2299.6	0.045	2300.2	0.040	2298.8	0.043	2300.1
0.041	2301.9	0.037	2302.6	0.037	2301.0	0.045	2301.9	0.040	2300.5	0.043	2302.1
0.041	2303.8	0.037	2304.0	0.037	2302.4	0.045	2303.9	0.040	2302.4	0.043	2303.7
0.041	2307.1	0.037	2305.4	0.037	2303.6	0.045	2305.8	0.040	2304.4	0.043	2305.4
0.041	2308.8	0.037	2306.9	0.037	2305.5	0.045	2307.4	0.041	2305.8	0.043	2307.0
0.041	2309.8	0.037	2308.3	0.037	2308.7	0.045	2309.2	0.041	2307.7	0.043	2308.2
0.041	2311.2	0.037	2310.2	0.037	2310.8	0.045	2310.4	0.041	2309.3	0.043	2309.3
0.041	2312.6	0.037	2312.2	0.037	2311.7	0.045	2311.7	0.041	2310.5	0.043	2311.4
0.041	2314.1	0.037	2314.0	0.037	2313.2	0.045	2312.9	0.041	2311.7	0.044	2314.7
0.041	2315.6	0.037	2315.5	0.037	2314.3	0.045	2315.6	0.041	2313.6	0.044	2316.5
0.041	2317.3	0.037	2317.2	0.037	2315.8	0.045	2318.4	0.041	2316.4	0.044	2317.3
0.041	2319.3	0.037	2318.7	0.037	2317.4	0.045	2319.6	0.041	2318.7	0.044	2318.9
0.041	2321.2	0.037	2320.1	0.037	2319.2	0.045	2320.9	0.041	2319.7	0.044	2320.1
0.041	2322.7	0.037	2321.3	0.037	2321.0	0.045	2322.4	0.041	2321.0	0.044	2321.6
0.041	2324.4	0.037	2323.5	0.037	2323.0	0.045	2323.7	0.041	2322.7	0.044	2323.1
0.041	2326.0	0.037	2326.5	0.037	2324.5	0.045	2325.4	0.041	2323.9	0.044	2325.2
0.041	2327.2	0.037	2328.1	0.037	2326.2	0.045	2326.8	0.041	2325.5	0.044	2327.1
0.041	2328.4	0.037	2329.1	0.037	2327.5	0.045	2328.8	0.041	2327.1	0.044	2328.8
0.041	2330.3	0.037	2330.7	0.037	2328.8	0.045	2330.8	0.041	2329.3	0.044	2330.4
0.041	2333.3	0.037	2332.0	0.037	2330.2	0.045	2332.4	0.041	2331.0	0.044	2332.1
0.041	2335.5	0.037	2333.5	0.037	2332.9	0.045	2334.1	0.041	2332.7	0.044	2333.3
0.041	2336.4	0.037	2335.0	0.037	2335.5	0.045	2335.5	0.041	2334.3	0.044	2334.5
0.041	2337.9	0.037	2336.9	0.037	2336.8	0.046	2336.6	0.041	2336.0	0.044	2336.4
0.041	2339.4	0.037	2338.8	0.037	2338.1	0.046	2337.9	0.041	2337.2	0.044	2339.4
0.041	2340.8	0.037	2340.6	0.037	2339.6	0.046	2340.8	0.041	2338.4	0.044	2341.5
0.041	2342.3	0.037	2342.1	0.037	2340.9	0.046	2343.6	0.041	2340.0	0.044	2342.3

0.041	2343.9	0.037	2343.9	0.037	2342.5	0.046	2344.6	0.041	2343.1	0.044	2343.8
0.041	2345.9	0.037	2345.2	0.038	2344.1	0.046	2345.9	0.041	2345.4	0.044	2345.3
0.042	2347.8	0.037	2346.6	0.038	2345.9	0.046	2347.4	0.041	2346.4	0.044	2346.7
0.042	2349.4	0.037	2347.9	0.038	2348.0	0.046	2348.7	0.041	2347.8	0.044	2348.3
0.042	2351.2	0.037	2350.3	0.038	2349.6	0.046	2350.2	0.041	2349.3	0.044	2350.1
0.042	2352.8	0.037	2353.4	0.038	2351.2	0.046	2351.8	0.041	2350.7	0.044	2352.1
0.042	2354.0	0.038	2354.8	0.038	2352.8	0.046	2353.8	0.041	2352.2	0.044	2353.9
0.042	2355.1	0.038	2355.8	0.038	2354.1	0.046	2355.9	0.041	2353.7	0.044	2355.5
0.042	2356.9	0.038	2357.3	0.038	2355.3	0.046	2357.5	0.041	2355.8	0.044	2357.2
0.042	2359.9	0.038	2358.8	0.038	2357.1	0.046	2359.2	0.041	2357.6	0.044	2358.4
0.042	2362.3	0.038	2360.2	0.038	2360.2	0.046	2360.4	0.041	2359.2	0.044	2359.6
0.042	2363.2	0.038	2361.8	0.038	2362.3	0.046	2361.7	0.041	2361.0	0.044	2361.2
0.042	2364.5	0.038	2363.7	0.038	2363.2	0.046	2363.1	0.042	2362.6	0.044	2364.2
0.042	2366.1	0.038	2365.6	0.038	2364.8	0.046	2365.8	0.042	2363.9	0.044	2366.5
0.042	2367.5	0.038	2367.3	0.038	2366.2	0.046	2368.6	0.042	2365.2	0.045	2367.5
0.042	2368.8	0.038	2369.0	0.038	2367.6	0.046	2369.4	0.042	2366.8	0.045	2368.9
0.042	2370.7	0.038	2370.7	0.038	2369.1	0.046	2370.9	0.042	2369.7	0.045	2370.4
0.042	2372.6	0.038	2371.9	0.038	2370.9	0.046	2372.5	0.042	2372.0	0.045	2371.8
0.042	2374.5	0.038	2373.0	0.038	2372.9	0.046	2373.7	0.042	2373.1	0.045	2373.1
0.042	2376.1	0.038	2374.8	0.038	2374.6	0.046	2375.1	0.042	2374.4	0.045	2374.9
0.042	2377.9	0.038	2377.7	0.038	2376.1	0.046	2376.9	0.042	2376.0	0.045	2377.0
0.042	2379.5	0.038	2380.1	0.038	2377.9	0.046	2378.9	0.042	2377.4	0.045	2378.7
0.042	2380.7	0.038	2381.1	0.038	2379.3	0.046	2380.8	0.042	2378.8	0.045	2380.4
0.042	2381.9	0.038	2382.4	0.038	2380.6	0.046	2382.3	0.042	2380.4	0.045	2382.1
0.042	2383.4	0.038	2383.9	0.038	2381.8	0.046	2384.0	0.042	2382.5	0.045	2383.6
0.042	2386.4	0.038	2385.2	0.038	2384.2	0.046	2385.3	0.042	2384.4	0.045	2384.7
0.042	2388.9	0.038	2386.7	0.038	2387.4	0.046	2386.6	0.042	2386.0	0.045	2386.0
0.042	2389.9	0.038	2388.4	0.038	2388.9	0.046	2387.9	0.042	2387.8	0.045	2388.7
0.042	2391.3	0.038	2390.4	0.038	2389.8	0.047	2390.8	0.042	2389.4	0.045	2391.5
0.042	2392.7	0.038	2392.2	0.038	2391.4	0.047	2393.5	0.042	2390.6	0.045	2392.7
0.042	2394.2	0.038	2393.9	0.038	2392.6	0.047	2394.5	0.042	2391.7	0.045	2393.9
0.042	2395.5	0.038	2395.7	0.038	2394.2	0.047	2395.9	0.042	2393.5	0.045	2395.4
0.042	2397.3	0.038	2397.3	0.038	2395.6	0.047	2397.4	0.042	2396.4	0.045	2396.8
0.042	2399.2	0.038	2398.4	0.038	2397.6	0.047	2398.7	0.042	2398.7	0.045	2398.2
0.042	2401.2	0.038	2399.6	0.038	2399.5	0.047	2400.1	0.042	2399.6	0.045	2399.8
0.042	2402.8	0.038	2401.4	0.039	2401.1	0.047	2401.9	0.042	2401.1	0.045	2401.9
0.043	2404.6	0.038	2404.6	0.039	2402.8	0.047	2403.8	0.042	2402.6	0.045	2403.8
0.043	2406.2	0.038	2406.6	0.039	2404.5	0.047	2405.7	0.042	2404.0	0.045	2405.4
0.043	2407.4	0.038	2407.6	0.039	2405.9	0.047	2407.3	0.042	2405.5	0.045	2407.2
0.043	2408.5	0.038	2409.0	0.039	2407.1	0.047	2409.1	0.042	2407.2	0.045	2408.6
0.043	2410.1	0.039	2410.4	0.039	2408.6	0.047	2410.5	0.042	2409.0	0.045	2409.7
0.043	2413.0	0.039	2411.9	0.039	2411.6	0.047	2411.6	0.042	2411.1	0.045	2411.0
0.043	2415.6	0.039	2413.2	0.039	2414.1	0.047	2412.9	0.042	2412.7	0.045	2413.2
0.043	2416.5	0.039	2415.2	0.039	2415.1	0.047	2415.8	0.042	2414.3	0.045	2416.3
0.043	2417.9	0.039	2417.1	0.039	2416.4	0.047	2418.6	0.042	2416.0	0.045	2418.0
0.043	2419.5	0.039	2418.9	0.039	2417.8	0.047	2419.5	0.042	2417.2	0.045	2419.0
0.043	2420.8	0.039	2420.4	0.039	2419.3	0.047	2420.9	0.043	2418.5	0.045	2420.5
0.043	2422.3	0.039	2422.4	0.039	2420.8	0.047	2422.4	0.043	2420.0	0.046	2421.8
0.043	2423.9	0.039	2423.8	0.039	2422.5	0.047	2423.7	0.043	2422.8	0.046	2423.4
0.043	2425.8	0.039	2424.9	0.039	2424.5	0.047	2425.1	0.043	2425.4	0.046	2424.9
0.043	2427.8	0.039	2426.0	0.039	2426.4	0.047	2426.9	0.043	2426.4	0.046	2426.8
0.043	2429.4	0.039	2428.2	0.039	2427.8	0.047	2428.9	0.043	2427.8	0.046	2428.8
0.043	2431.0	0.039	2431.5	0.039	2429.6	0.047	2430.8	0.043	2429.4	0.046	2430.5
0.043	2432.7	0.039	2433.2	0.039	2431.1	0.047	2432.3	0.043	2430.6	0.046	2432.2
0.043	2434.2	0.039	2434.2	0.039	2432.3	0.047	2434.2	0.043	2432.2	0.046	2433.7
0.043	2435.4	0.039	2435.7	0.039	2433.4	0.047	2435.6	0.043	2433.8	0.046	2434.9
0.043	2436.7	0.039	2437.1	0.039	2435.6	0.047	2436.7	0.043	2435.7	0.046	2436.1

0.043	2439.2	0.039	2438.6	0.039	2438.7	0.047	2437.9	0.043	2437.6	0.046	2438.0
0.043	2442.1	0.039	2439.9	0.039	2440.6	0.047	2440.8	0.043	2439.3	0.046	2441.1
0.043	2443.7	0.039	2442.0	0.039	2441.5	0.047	2443.5	0.043	2441.0	0.046	2443.3
0.043	2444.7	0.039	2443.7	0.039	2443.0	0.048	2444.5	0.043	2442.7	0.046	2444.0
0.043	2446.2	0.039	2445.6	0.039	2444.3	0.048	2446.0	0.043	2444.0	0.046	2445.6
0.043	2447.5	0.039	2447.2	0.039	2445.9	0.048	2447.4	0.043	2445.2	0.046	2447.1
0.043	2449.1	0.039	2448.9	0.039	2447.5	0.048	2448.8	0.043	2446.6	0.046	2448.4
0.043	2450.4	0.039	2450.5	0.039	2449.3	0.048	2450.2	0.043	2449.2	0.046	2450.0
0.043	2452.5	0.039	2451.6	0.039	2451.2	0.048	2451.9	0.043	2452.2	0.046	2451.8
0.043	2454.4	0.039	2452.8	0.039	2453.0	0.048	2453.8	0.043	2453.4	0.046	2453.7
0.043	2456.2	0.039	2455.1	0.039	2454.5	0.048	2455.8	0.043	2454.5	0.046	2455.5
0.043	2457.6	0.039	2458.2	0.040	2456.3	0.048	2457.4	0.043	2456.1	0.046	2457.1
0.043	2459.5	0.039	2460.0	0.040	2457.6	0.048	2459.0	0.043	2457.4	0.046	2458.8
0.043	2461.1	0.039	2460.8	0.040	2458.9	0.048	2460.5	0.043	2459.0	0.046	2460.1
0.044	2462.1	0.039	2462.4	0.040	2460.2	0.048	2461.7	0.043	2460.4	0.046	2461.2
0.044	2463.4	0.039	2463.7	0.040	2462.7	0.048	2462.9	0.043	2462.3	0.046	2462.9
0.044	2465.6	0.039	2465.2	0.040	2465.7	0.048	2465.6	0.043	2464.2	0.046	2465.7
0.044	2468.6	0.040	2466.6	0.040	2467.0	0.048	2468.5	0.043	2466.1	0.046	2468.2
0.044	2470.5	0.040	2468.7	0.040	2468.0	0.048	2469.6	0.043	2467.7	0.046	2469.2
0.044	2471.4	0.040	2470.7	0.040	2469.6	0.048	2470.9	0.043	2469.4	0.046	2470.6
0.044	2472.8	0.040	2472.4	0.040	2470.9	0.048	2472.4	0.043	2470.8	0.046	2472.0
0.044	2474.3	0.040	2473.8	0.040	2472.4	0.048	2473.8	0.043	2472.0	0.046	2473.3
0.044	2475.8	0.040	2475.6	0.040	2474.2	0.048	2475.3	0.043	2473.3	0.046	2474.9
0.044	2477.1	0.040	2477.1	0.040	2476.0	0.048	2476.8	0.043	2475.8	0.047	2476.6
0.044	2479.0	0.040	2478.3	0.040	2477.8	0.048	2478.8	0.044	2478.6	0.047	2478.6
0.044	2481.1	0.040	2479.4	0.040	2479.6	0.048	2480.7	0.044	2480.1	0.047	2480.5
0.044	2482.9	0.040	2482.0	0.040	2481.3	0.048	2482.2	0.044	2481.2	0.047	2482.1
0.044	2484.4	0.040	2485.0	0.040	2482.9	0.048	2484.1	0.044	2482.9	0.047	2483.8
0.044	2486.3	0.040	2486.5	0.040	2484.1	0.048	2485.5	0.044	2484.2	0.047	2485.2
0.044	2487.8	0.040	2487.5	0.040	2485.2	0.048	2486.6	0.044	2485.6	0.047	2486.4
0.044	2488.9	0.040	2488.9	0.040	2487.0	0.048	2487.9	0.044	2487.1	0.047	2487.7
0.044	2490.0	0.040	2490.3	0.040	2490.2	0.048	2490.5	0.044	2489.1	0.047	2490.2
0.044	2492.1	0.040	2491.8	0.040	2492.3	0.048	2493.4	0.044	2490.9	0.047	2493.1
0.044	2495.2	0.040	2493.4	0.040	2493.2	0.048	2494.8	0.044	2492.8	0.047	2494.4
0.044	2497.3	0.040	2495.3	0.040	2494.6	0.048	2496.0	0.044	2494.3	0.047	2495.7
0.044	2498.3	0.040	2497.2	0.040	2496.0	0.049	2497.4	0.044	2496.0	0.047	2497.3
0.044	2499.6	0.040	2499.0	0.040	2497.6	0.049	2498.6	0.044	2497.3	0.047	2498.5
0.044	2501.0	0.040	2500.6	0.040	2499.0	0.049	2500.2	0.044	2498.6	0.047	2500.0
0.044	2502.4	0.040	2502.3	0.040	2500.8	0.049	2501.9	0.044	2499.8	0.047	2501.5
0.044	2503.9	0.040	2503.7	0.040	2502.8	0.049	2503.9	0.044	2502.3	0.047	2503.6
0.044	2505.5	0.040	2504.8	0.040	2504.6	0.049	2505.8	0.044	2505.3	0.047	2505.4
0.044	2507.4	0.040	2506.1	0.040	2506.2	0.049	2507.3	0.044	2506.9	0.047	2507.0
0.044	2509.4	0.040	2508.8	0.040	2508.0	0.049	2509.1	0.044	2507.9	0.047	2508.7
0.044	2510.9	0.040	2511.6	0.040	2509.5	0.049	2510.6	0.044	2509.6	0.047	2510.2
0.044	2512.8	0.040	2512.9	0.041	2510.5	0.049	2511.8	0.044	2510.7	0.047	2511.4
0.044	2514.5	0.040	2514.1	0.041	2511.7	0.049	2512.8	0.044	2512.2	0.047	2512.7
0.044	2515.7	0.040	2515.6	0.041	2514.1	0.049	2515.2	0.044	2513.7	0.047	2514.7
0.044	2516.8	0.040	2517.0	0.041	2517.3	0.049	2518.4	0.044	2515.5	0.047	2517.9
0.044	2518.4	0.040	2518.5	0.041	2518.8	0.049	2519.8	0.044	2517.5	0.047	2519.9
0.045	2521.3	0.040	2520.0	0.041	2520.0	0.049	2520.9	0.044	2519.3	0.047	2520.7
0.045	2523.8	0.040	2522.0	0.041	2521.4	0.049	2522.4	0.044	2520.9	0.047	2522.3
0.045	2525.0	0.041	2523.9	0.041	2522.7	0.049	2523.8	0.044	2522.7	0.047	2523.6
0.045	2526.2	0.041	2525.4	0.041	2524.2	0.049	2525.4	0.044	2524.1	0.047	2525.0
0.045	2527.8	0.041	2527.2	0.041	2525.7	0.049	2526.9	0.044	2525.3	0.047	2526.4
0.045	2529.0	0.041	2528.9	0.041	2527.6	0.049	2528.8	0.044	2526.5	0.047	2528.3
0.045	2530.6	0.041	2530.3	0.041	2529.5	0.049	2530.7	0.044	2528.8	0.048	2530.2
0.045	2532.1	0.041	2531.6	0.041	2531.2	0.049	2532.4	0.044	2532.1	0.048	2532.1

0.045	2534.1	0.041	2532.9	0.041	2532.9	0.049	2533.9	0.044	2533.7	0.048	2533.8
0.045	2536.1	0.041	2535.5	0.041	2534.5	0.049	2535.5	0.045	2534.7	0.048	2535.5
0.045	2537.9	0.041	2538.5	0.041	2535.9	0.049	2536.7	0.045	2536.2	0.048	2536.6
0.045	2539.4	0.041	2539.7	0.041	2537.2	0.049	2537.8	0.045	2537.5	0.048	2538.0
0.045	2541.1	0.041	2540.8	0.041	2538.6	0.049	2540.1	0.045	2538.9	0.048	2539.6
0.045	2542.6	0.041	2542.3	0.041	2541.2	0.049	2543.3	0.045	2540.4	0.048	2542.6
0.045	2543.8	0.041	2543.7	0.041	2544.1	0.049	2545.0	0.045	2542.2	0.048	2545.0
0.045	2545.0	0.041	2545.1	0.041	2545.4	0.049	2545.9	0.045	2544.1	0.048	2545.7
0.045	2547.6	0.041	2546.8	0.041	2546.5	0.049	2547.6	0.045	2546.1	0.048	2547.3
0.045	2550.3	0.041	2548.6	0.041	2548.0	0.049	2548.8	0.045	2547.6	0.048	2548.6
0.045	2551.9	0.041	2550.5	0.041	2549.2	0.050	2550.2	0.045	2549.4	0.048	2550.0
0.045	2553.0	0.041	2552.3	0.041	2550.8	0.050	2551.8	0.045	2550.9	0.048	2551.6
0.045	2554.4	0.041	2554.0	0.041	2552.3	0.050	2553.7	0.045	2552.2	0.048	2553.4
0.045	2556.0	0.041	2555.8	0.041	2554.3	0.050	2555.7	0.045	2553.4	0.048	2555.4
0.045	2557.4	0.041	2557.1	0.041	2556.2	0.050	2557.4	0.045	2555.2	0.048	2557.2
0.045	2558.9	0.041	2558.2	0.041	2557.9	0.050	2559.0	0.045	2558.3	0.048	2558.7
0.045	2560.7	0.041	2559.5	0.041	2559.6	0.050	2560.7	0.045	2560.3	0.048	2560.5
0.045	2562.6	0.041	2562.3	0.041	2561.3	0.050	2561.9	0.045	2561.2	0.048	2561.9
0.045	2564.5	0.041	2565.1	0.041	2562.5	0.050	2562.9	0.045	2562.8	0.048	2563.1
0.045	2566.0	0.041	2566.3	0.041	2563.8	0.050	2565.1	0.045	2564.4	0.048	2564.3
0.045	2567.9	0.041	2567.5	0.041	2565.4	0.050	2568.3	0.045	2565.7	0.048	2567.1
0.045	2569.4	0.041	2569.0	0.042	2568.3	0.050	2570.2	0.045	2567.1	0.048	2569.9
0.045	2570.5	0.041	2570.4	0.042	2570.7	0.050	2571.0	0.045	2568.7	0.048	2571.0
0.045	2571.8	0.041	2571.8	0.042	2571.9	0.050	2572.5	0.045	2570.7	0.048	2572.3
0.045	2573.6	0.041	2573.4	0.042	2573.0	0.050	2573.7	0.045	2572.7	0.048	2573.9
0.045	2576.8	0.041	2575.3	0.042	2574.6	0.050	2575.3	0.045	2574.5	0.048	2575.1
0.045	2578.9	0.041	2577.3	0.042	2575.9	0.050	2576.7	0.045	2576.0	0.048	2576.6
0.046	2579.8	0.041	2579.1	0.042	2577.4	0.050	2578.6	0.045	2577.6	0.048	2578.2
0.046	2581.3	0.042	2580.7	0.042	2579.1	0.050	2580.7	0.045	2578.9	0.048	2580.1
0.046	2582.8	0.042	2582.5	0.042	2581.2	0.050	2582.4	0.045	2580.2	0.048	2582.2
0.046	2584.2	0.042	2583.6	0.042	2583.0	0.050	2584.1	0.045	2581.7	0.048	2583.9
0.046	2585.7	0.042	2584.9	0.042	2584.6	0.050	2585.7	0.045	2584.8	0.049	2585.4
0.046	2587.2	0.042	2586.2	0.042	2586.3	0.050	2587.0	0.045	2587.1	0.049	2587.0
0.046	2589.2	0.042	2588.7	0.042	2587.9	0.050	2588.2	0.045	2588.1	0.049	2588.2
0.046	2591.1	0.042	2591.7	0.042	2589.0	0.050	2589.7	0.045	2589.6	0.049	2589.3
0.046	2592.8	0.042	2593.1	0.042	2590.2	0.050	2592.7	0.045	2591.1	0.049	2591.3
0.046	2594.5	0.042	2594.2	0.042	2592.2	0.050	2595.2	0.046	2592.4	0.049	2594.6
0.046	2596.1	0.042	2595.7	0.042	2595.2	0.050	2596.1	0.046	2593.9	0.049	2596.5
0.046	2597.4	0.042	2597.0	0.042	2597.3	0.050	2597.6	0.046	2595.5	0.049	2597.3
0.046	2598.6	0.042	2598.5	0.042	2598.2	0.050	2599.0	0.046	2597.3	0.049	2599.0
0.046	2600.1	0.042	2600.1	0.042	2599.8	0.050	2600.4	0.046	2599.3	0.049	2600.2
0.046	2602.8	0.042	2602.0	0.042	2601.1	0.050	2601.8	0.046	2601.0	0.049	2601.7
0.046	2605.6	0.042	2603.9	0.042	2602.5	0.050	2603.7	0.046	2602.5	0.049	2603.3
0.046	2606.9	0.042	2605.6	0.042	2603.9	0.051	2605.6	0.046	2604.2	0.049	2605.1
0.046	2608.0	0.042	2607.3	0.042	2605.8	0.051	2607.5	0.046	2605.7	0.049	2606.9
0.046	2609.6	0.042	2608.9	0.042	2607.9	0.051	2608.9	0.046	2606.9	0.049	2608.8
0.046	2610.8	0.042	2610.3	0.042	2609.6	0.051	2610.6	0.046	2608.2	0.049	2610.2
0.046	2612.4	0.042	2611.5	0.042	2611.0	0.051	2612.1	0.046	2611.0	0.049	2611.9
0.046	2613.9	0.042	2612.8	0.042	2613.0	0.051	2613.4	0.046	2613.9	0.049	2613.5
0.046	2615.8	0.042	2615.3	0.042	2614.5	0.051	2614.5	0.046	2615.1	0.049	2614.8
0.046	2617.7	0.042	2618.4	0.042	2615.7	0.051	2617.2	0.046	2616.2	0.049	2616.1
0.046	2619.4	0.042	2619.9	0.042	2616.9	0.051	2620.3	0.046	2617.8	0.049	2619.0
0.046	2621.1	0.042	2620.8	0.042	2619.0	0.051	2621.4	0.046	2619.0	0.049	2621.6
0.046	2622.8	0.042	2622.4	0.042	2622.1	0.051	2622.6	0.046	2620.5	0.049	2622.7
0.046	2624.3	0.042	2623.7	0.042	2623.9	0.051	2624.2	0.046	2622.1	0.049	2624.0
0.046	2625.5	0.042	2625.1	0.043	2624.9	0.051	2625.4	0.046	2623.9	0.049	2625.5
0.046	2626.7	0.042	2626.6	0.043	2626.3	0.051	2627.0	0.046	2625.8	0.049	2626.7

0.046	2628.8	0.042	2628.6	0.043	2627.7	0.051	2628.6	0.046	2627.7	0.049	2628.3
0.046	2631.7	0.042	2630.5	0.043	2629.2	0.051	2630.6	0.046	2629.3	0.049	2630.0
0.046	2633.7	0.042	2632.4	0.043	2630.6	0.051	2632.5	0.046	2631.0	0.049	2632.0
0.046	2634.7	0.042	2633.9	0.043	2632.4	0.051	2633.9	0.046	2632.4	0.049	2633.9
0.046	2636.2	0.042	2635.6	0.043	2634.4	0.051	2635.7	0.046	2633.7	0.049	2635.3
0.047	2637.8	0.043	2637.1	0.043	2636.3	0.051	2637.2	0.046	2634.8	0.049	2637.2
0.047	2639.1	0.043	2638.3	0.043	2637.8	0.051	2638.4	0.046	2637.0	0.049	2638.7
0.047	2640.6	0.043	2639.6	0.043	2639.7	0.051	2639.5	0.046	2640.1	0.050	2639.8
0.047	2642.2	0.043	2641.8	0.043	2641.0	0.051	2642.1	0.046	2642.0	0.050	2641.0
0.047	2644.3	0.043	2645.0	0.043	2642.3	0.051	2645.3	0.046	2642.8	0.050	2643.3
0.047	2646.1	0.043	2646.5	0.043	2643.5	0.051	2646.5	0.046	2644.5	0.050	2646.6
0.047	2647.8	0.043	2647.4	0.043	2646.1	0.051	2647.5	0.046	2645.8	0.050	2648.0
0.047	2649.5	0.043	2649.1	0.043	2648.8	0.051	2649.0	0.046	2647.4	0.050	2649.0
0.047	2651.0	0.043	2650.5	0.043	2650.5	0.051	2650.3	0.047	2649.0	0.050	2650.6
0.047	2652.4	0.043	2652.0	0.043	2651.4	0.051	2651.8	0.047	2650.5	0.050	2651.8
0.047	2653.6	0.043	2653.4	0.043	2653.0	0.051	2653.6	0.047	2652.5	0.050	2653.3
0.047	2655.0	0.043	2655.2	0.043	2654.3	0.051	2655.5	0.047	2654.4	0.050	2655.0
0.047	2657.8	0.043	2657.2	0.043	2655.8	0.051	2657.4	0.047	2656.0	0.050	2656.8
0.047	2660.5	0.043	2659.1	0.043	2657.3	0.052	2659.0	0.047	2657.5	0.050	2658.7
0.047	2661.8	0.043	2660.6	0.043	2659.3	0.052	2660.8	0.047	2659.1	0.050	2660.6
0.047	2663.0	0.043	2662.3	0.043	2661.2	0.052	2662.3	0.047	2660.5	0.050	2662.1
0.047	2664.7	0.043	2663.7	0.043	2663.0	0.052	2663.4	0.047	2661.7	0.050	2663.7
0.047	2665.9	0.043	2664.9	0.043	2664.6	0.052	2664.5	0.047	2663.4	0.050	2664.9
0.047	2667.3	0.043	2666.1	0.043	2666.2	0.052	2666.8	0.047	2666.5	0.050	2666.1
0.047	2668.8	0.043	2668.4	0.043	2667.6	0.052	2670.0	0.047	2668.8	0.050	2667.9
0.047	2670.7	0.043	2671.8	0.043	2668.8	0.052	2671.6	0.047	2669.7	0.050	2671.0
0.047	2672.6	0.043	2673.3	0.043	2670.2	0.052	2672.6	0.047	2671.2	0.050	2673.1
0.047	2674.5	0.043	2674.2	0.043	2672.8	0.052	2674.1	0.047	2672.8	0.050	2674.0
0.047	2676.1	0.043	2675.8	0.043	2675.6	0.052	2675.4	0.047	2674.1	0.050	2675.7
0.047	2677.9	0.043	2677.2	0.043	2676.9	0.052	2676.9	0.047	2675.6	0.050	2677.0
0.047	2679.3	0.043	2678.6	0.043	2678.2	0.052	2678.6	0.047	2677.2	0.050	2678.4
0.047	2680.5	0.043	2680.0	0.043	2679.8	0.052	2680.6	0.047	2679.1	0.050	2679.9
0.047	2681.7	0.043	2681.8	0.044	2681.0	0.052	2682.5	0.047	2681.0	0.050	2681.7
0.047	2684.0	0.043	2683.8	0.044	2682.5	0.052	2684.0	0.047	2682.6	0.050	2683.7
0.047	2687.3	0.043	2685.6	0.044	2684.1	0.052	2685.8	0.047	2684.4	0.050	2685.4
0.047	2689.0	0.043	2687.2	0.044	2686.0	0.052	2687.4	0.047	2686.0	0.050	2686.9
0.047	2689.9	0.043	2689.0	0.044	2687.8	0.052	2688.5	0.047	2687.3	0.050	2688.8
0.047	2691.3	0.043	2690.4	0.044	2689.7	0.052	2689.6	0.047	2688.5	0.050	2690.1
0.047	2692.7	0.043	2691.7	0.044	2691.4	0.052	2691.5	0.047	2690.1	0.050	2691.4
0.047	2694.1	0.043	2692.9	0.044	2693.0	0.052	2694.7	0.047	2692.8	0.050	2692.6
0.048	2695.5	0.044	2695.0	0.044	2694.2	0.052	2696.9	0.047	2695.5	0.051	2695.4
0.048	2697.2	0.044	2698.3	0.044	2695.4	0.052	2697.8	0.047	2696.7	0.051	2698.2
0.048	2699.3	0.044	2700.0	0.044	2696.9	0.052	2699.2	0.047	2697.8	0.051	2699.6
0.048	2701.2	0.044	2700.9	0.044	2699.8	0.052	2700.5	0.047	2699.4	0.051	2700.5
0.048	2702.7	0.044	2702.4	0.044	2702.4	0.052	2702.0	0.047	2700.7	0.051	2702.1
0.048	2704.5	0.044	2703.8	0.044	2703.4	0.052	2703.5	0.047	2702.2	0.051	2703.5
0.048	2706.1	0.044	2705.1	0.044	2704.7	0.052	2705.4	0.047	2703.7	0.051	2704.9
0.048	2707.3	0.044	2706.7	0.044	2706.3	0.052	2707.2	0.047	2705.6	0.051	2706.5
0.048	2708.6	0.044	2708.5	0.044	2707.6	0.052	2709.0	0.048	2707.6	0.051	2708.5
0.048	2710.2	0.044	2710.4	0.044	2709.1	0.052	2710.7	0.048	2709.4	0.051	2710.5
0.048	2713.2	0.044	2712.3	0.044	2710.6	0.053	2712.4	0.048	2711.0	0.051	2711.9
0.048	2715.5	0.044	2713.8	0.044	2712.6	0.053	2713.7	0.048	2712.7	0.051	2713.7
0.048	2716.5	0.044	2715.6	0.044	2714.5	0.053	2714.9	0.048	2714.1	0.051	2715.3
0.048	2717.9	0.044	2717.2	0.044	2716.2	0.053	2716.5	0.048	2715.4	0.051	2716.6
0.048	2719.5	0.044	2718.5	0.044	2718.0	0.053	2719.3	0.048	2716.6	0.051	2717.8
0.048	2720.9	0.044	2719.6	0.044	2719.5	0.053	2721.9	0.048	2718.9	0.051	2719.8
0.048	2722.4	0.044	2721.5	0.044	2720.7	0.053	2722.8	0.048	2721.8	0.051	2723.0

0.048	2723.9	0.044	2724.6	0.044	2722.0	0.053	2724.1	0.048	2723.6	0.051	2724.8
0.048	2725.8	0.044	2726.5	0.044	2723.8	0.053	2725.6	0.048	2724.5	0.051	2725.7
0.048	2727.8	0.044	2727.4	0.044	2726.7	0.053	2726.9	0.048	2726.1	0.051	2727.3
0.048	2729.6	0.044	2729.0	0.044	2728.8	0.053	2728.4	0.048	2727.6	0.051	2728.6
0.048	2731.1	0.044	2730.5	0.044	2729.8	0.053	2730.3	0.048	2729.0	0.051	2730.1
0.048	2732.8	0.044	2731.9	0.044	2731.3	0.053	2732.3	0.048	2730.5	0.051	2731.6
0.048	2734.2	0.044	2733.4	0.044	2733.0	0.053	2734.1	0.048	2732.2	0.051	2733.5
0.048	2735.4	0.044	2735.0	0.044	2734.4	0.053	2735.6	0.048	2734.2	0.051	2735.5
0.048	2736.6	0.044	2737.0	0.045	2735.7	0.053	2737.5	0.048	2736.1	0.051	2737.2
0.048	2738.9	0.044	2739.0	0.045	2737.4	0.053	2738.9	0.048	2737.6	0.051	2738.7
0.048	2742.1	0.044	2740.7	0.045	2739.5	0.053	2740.1	0.048	2739.2	0.051	2740.3
0.048	2743.7	0.044	2742.2	0.045	2741.2	0.053	2741.2	0.048	2740.8	0.051	2741.7
0.048	2744.6	0.044	2744.0	0.045	2742.8	0.053	2743.9	0.048	2742.2	0.051	2743.0
0.048	2746.2	0.044	2745.1	0.045	2744.7	0.053	2746.9	0.048	2743.5	0.051	2744.5
0.048	2747.7	0.044	2746.4	0.045	2746.1	0.053	2748.1	0.048	2745.0	0.051	2747.4
0.048	2749.1	0.044	2748.0	0.045	2747.4	0.053	2749.2	0.048	2747.8	0.052	2749.9
0.048	2750.6	0.044	2750.9	0.045	2748.7	0.053	2750.7	0.048	2750.4	0.052	2750.8
0.048	2752.2	0.045	2753.4	0.045	2750.4	0.053	2752.0	0.048	2751.6	0.052	2752.2
0.049	2754.2	0.045	2754.5	0.045	2753.5	0.053	2753.5	0.048	2752.8	0.052	2753.7
0.049	2756.1	0.045	2755.8	0.045	2755.7	0.053	2755.1	0.048	2754.4	0.052	2755.1
0.049	2757.8	0.045	2757.4	0.045	2756.6	0.053	2757.3	0.048	2755.8	0.052	2756.6
0.049	2759.4	0.045	2758.7	0.045	2758.0	0.053	2759.1	0.048	2757.3	0.052	2758.2
0.049	2760.9	0.045	2760.3	0.045	2759.6	0.053	2760.6	0.048	2758.9	0.052	2760.3
0.049	2762.3	0.045	2761.9	0.045	2761.0	0.053	2762.4	0.048	2760.6	0.052	2762.2
0.049	2763.6	0.045	2763.7	0.045	2762.4	0.053	2763.9	0.048	2762.6	0.052	2763.5
0.049	2765.1	0.045	2765.5	0.045	2764.1	0.053	2765.2	0.048	2764.4	0.052	2765.5
0.049	2768.2	0.045	2767.3	0.045	2766.0	0.054	2766.2	0.049	2765.9	0.052	2766.8
0.049	2770.8	0.045	2768.8	0.045	2767.9	0.054	2768.4	0.049	2767.7	0.052	2768.1
0.049	2771.7	0.045	2770.6	0.045	2769.6	0.054	2771.6	0.049	2769.2	0.052	2769.2
0.049	2773.0	0.045	2772.0	0.045	2771.4	0.054	2773.3	0.049	2770.3	0.052	2771.9
0.049	2774.6	0.045	2773.3	0.045	2772.9	0.054	2774.4	0.049	2771.5	0.052	2774.8
0.049	2775.8	0.045	2774.5	0.045	2774.0	0.054	2775.8	0.049	2774.0	0.052	2776.2
0.049	2777.4	0.045	2777.2	0.045	2775.3	0.054	2777.1	0.049	2777.0	0.052	2777.2
0.049	2779.0	0.045	2780.2	0.045	2777.2	0.054	2778.6	0.049	2778.6	0.052	2778.8
0.049	2780.8	0.045	2781.5	0.045	2780.5	0.054	2780.0	0.049	2779.5	0.052	2780.1
0.049	2782.8	0.045	2782.6	0.045	2782.5	0.054	2782.0	0.049	2781.0	0.052	2781.5
0.049	2784.5	0.045	2784.2	0.045	2783.2	0.054	2784.0	0.049	2782.4	0.052	2783.3
0.049	2786.1	0.045	2785.2	0.045	2784.8	0.054	2785.6	0.049	2783.9	0.052	2785.2
0.049	2787.8	0.045	2786.8	0.045	2786.2	0.054	2787.3	0.049	2785.3	0.052	2787.1
0.049	2789.2	0.045	2788.4	0.045	2787.5	0.054	2789.1	0.049	2787.2	0.052	2788.8
0.049	2790.3	0.045	2790.2	0.045	2789.0	0.054	2790.5	0.049	2789.2	0.052	2790.3
0.049	2791.5	0.045	2792.1	0.045	2790.8	0.054	2791.6	0.049	2791.1	0.052	2792.0
0.049	2793.9	0.045	2794.1	0.046	2792.7	0.054	2793.1	0.049	2792.6	0.052	2793.3
0.049	2797.1	0.045	2795.5	0.046	2794.7	0.054	2796.0	0.049	2794.4	0.052	2794.5
0.049	2798.7	0.045	2797.3	0.046	2796.1	0.054	2798.6	0.049	2796.0	0.052	2796.1
0.049	2799.7	0.045	2798.7	0.046	2798.0	0.054	2799.5	0.049	2797.2	0.052	2799.2
0.049	2801.2	0.045	2799.8	0.046	2799.6	0.054	2800.8	0.049	2798.4	0.052	2801.4
0.049	2802.6	0.045	2801.1	0.046	2800.7	0.054	2802.3	0.049	2800.1	0.052	2802.3
0.049	2804.1	0.045	2803.4	0.046	2801.8	0.054	2803.6	0.049	2803.1	0.053	2803.9
0.049	2805.8	0.045	2806.5	0.046	2803.9	0.054	2805.1	0.049	2805.3	0.053	2805.2
0.049	2807.3	0.045	2808.1	0.046	2807.0	0.054	2806.8	0.049	2806.4	0.053	2806.7
0.049	2809.3	0.045	2809.1	0.046	2808.8	0.054	2808.9	0.049	2807.8	0.053	2808.2
0.049	2811.2	0.046	2810.7	0.046	2809.7	0.054	2810.8	0.049	2809.3	0.053	2810.1
0.050	2812.7	0.046	2812.0	0.046	2811.4	0.054	2812.4	0.049	2810.7	0.053	2812.1
0.050	2814.4	0.046	2813.5	0.046	2812.8	0.054	2814.2	0.049	2812.1	0.053	2813.9
0.050	2815.9	0.046	2815.2	0.046	2814.2	0.054	2815.7	0.049	2813.8	0.053	2815.5
0.050	2817.2	0.046	2816.9	0.046	2815.7	0.054	2816.8	0.049	2815.8	0.053	2817.1

0.050	2818.4	0.046	2818.7	0.046	2817.4	0.054	2817.9	0.049	2817.8	0.053	2818.6
0.050	2820.2	0.046	2820.7	0.046	2819.4	0.054	2820.4	0.049	2819.3	0.053	2819.7
0.050	2823.1	0.046	2822.2	0.046	2821.4	0.055	2823.5	0.049	2821.0	0.053	2820.9
0.050	2825.4	0.046	2823.8	0.046	2823.0	0.055	2825.0	0.049	2822.7	0.053	2823.6
0.050	2826.5	0.046	2825.4	0.046	2824.5	0.055	2825.9	0.050	2824.0	0.053	2826.6
0.050	2828.0	0.046	2826.6	0.046	2826.1	0.055	2827.6	0.050	2825.2	0.053	2827.8
0.050	2829.6	0.046	2827.9	0.046	2827.4	0.055	2828.8	0.050	2826.5	0.053	2829.0
0.050	2830.9	0.046	2829.8	0.046	2828.5	0.055	2830.3	0.050	2829.1	0.053	2830.5
0.050	2832.3	0.046	2832.9	0.046	2830.4	0.055	2831.9	0.050	2832.0	0.053	2831.8
0.050	2833.9	0.046	2835.0	0.046	2833.7	0.055	2833.8	0.050	2833.5	0.053	2833.3
0.050	2835.9	0.046	2835.8	0.046	2835.6	0.055	2835.7	0.050	2834.6	0.053	2835.0
0.050	2837.8	0.046	2837.5	0.046	2836.5	0.055	2837.4	0.050	2836.0	0.053	2836.8
0.050	2839.4	0.046	2839.0	0.046	2838.2	0.055	2839.0	0.050	2837.4	0.053	2838.8
0.050	2841.0	0.046	2840.3	0.046	2839.5	0.055	2840.6	0.050	2838.9	0.053	2840.4
0.050	2842.7	0.046	2841.8	0.046	2840.9	0.055	2841.9	0.050	2840.4	0.053	2842.0
0.050	2844.2	0.046	2843.5	0.046	2842.5	0.055	2843.1	0.050	2842.1	0.053	2843.7
0.050	2845.4	0.046	2845.3	0.046	2844.1	0.055	2844.9	0.050	2844.0	0.053	2844.9
0.050	2846.6	0.046	2847.3	0.046	2846.1	0.055	2847.9	0.050	2846.1	0.053	2846.0
0.050	2848.9	0.046	2848.9	0.046	2847.9	0.055	2850.3	0.050	2847.4	0.053	2848.1
0.050	2852.0	0.046	2850.6	0.047	2849.5	0.055	2850.9	0.050	2849.2	0.053	2851.3
0.050	2853.9	0.046	2852.3	0.047	2851.2	0.055	2852.6	0.050	2850.9	0.053	2853.2
0.050	2854.6	0.046	2853.5	0.047	2852.7	0.055	2854.0	0.050	2852.1	0.053	2854.0
0.050	2856.2	0.046	2854.8	0.047	2854.0	0.055	2855.4	0.050	2853.4	0.053	2855.5
0.050	2857.7	0.046	2856.4	0.047	2855.3	0.055	2857.0	0.050	2855.3	0.053	2856.9
0.050	2859.2	0.046	2859.2	0.047	2857.2	0.055	2858.6	0.050	2858.2	0.054	2858.3
0.050	2860.4	0.046	2861.7	0.047	2860.4	0.055	2860.5	0.050	2860.5	0.054	2859.8
0.050	2862.3	0.046	2862.9	0.047	2862.5	0.055	2862.5	0.050	2861.4	0.054	2861.9
0.050	2864.4	0.046	2864.1	0.047	2863.3	0.055	2863.9	0.050	2862.7	0.054	2863.8
0.050	2866.2	0.046	2865.7	0.047	2864.8	0.055	2865.8	0.050	2864.4	0.054	2865.5
0.050	2867.7	0.046	2867.0	0.047	2866.2	0.055	2867.2	0.050	2865.6	0.054	2867.0
0.050	2869.5	0.047	2868.5	0.047	2867.5	0.055	2868.4	0.050	2867.2	0.054	2868.8
0.051	2871.0	0.047	2870.1	0.047	2869.1	0.055	2869.5	0.050	2868.8	0.054	2870.1
0.051	2872.5	0.047	2872.0	0.047	2870.8	0.055	2872.1	0.050	2870.8	0.054	2871.4
0.051	2873.7	0.047	2874.0	0.047	2872.7	0.055	2875.3	0.050	2872.7	0.054	2872.6
0.051	2875.1	0.047	2875.6	0.047	2874.7	0.055	2876.6	0.050	2874.4	0.054	2875.3
0.051	2877.8	0.047	2877.3	0.047	2876.2	0.056	2877.5	0.050	2876.0	0.054	2878.2
0.051	2880.5	0.047	2879.0	0.047	2878.0	0.056	2879.1	0.050	2877.8	0.054	2879.5
0.051	2881.9	0.047	2880.3	0.047	2879.5	0.056	2880.4	0.050	2879.2	0.054	2880.5
0.051	2882.9	0.047	2881.6	0.047	2880.7	0.056	2881.9	0.050	2880.4	0.054	2882.1
0.051	2884.5	0.047	2882.9	0.047	2881.8	0.056	2883.4	0.050	2881.5	0.054	2883.4
0.051	2885.9	0.047	2885.4	0.047	2883.8	0.056	2885.4	0.051	2884.0	0.054	2885.0
0.051	2887.4	0.047	2888.4	0.047	2886.9	0.056	2887.4	0.051	2887.0	0.054	2886.6
0.051	2888.9	0.047	2889.9	0.047	2888.9	0.056	2889.1	0.051	2888.6	0.054	2888.8
0.051	2890.8	0.047	2890.8	0.047	2889.8	0.056	2890.7	0.051	2889.4	0.054	2890.5
0.051	2892.8	0.047	2892.3	0.047	2891.4	0.056	2892.4	0.051	2891.0	0.054	2892.1
0.051	2894.7	0.047	2893.7	0.047	2892.8	0.056	2893.6	0.051	2892.5	0.054	2893.8
0.051	2896.0	0.047	2895.2	0.047	2894.3	0.056	2894.8	0.051	2893.9	0.054	2895.4
0.051	2897.7	0.047	2896.8	0.047	2895.8	0.056	2896.5	0.051	2895.4	0.054	2896.6
0.051	2899.3	0.047	2898.6	0.047	2897.4	0.056	2899.5	0.051	2897.3	0.054	2897.8
0.051	2900.6	0.047	2900.6	0.047	2899.4	0.056	2901.8	0.051	2899.3	0.054	2899.5
0.051	2901.8	0.047	2902.4	0.047	2901.4	0.056	2902.7	0.051	2901.2	0.054	2902.9
0.051	2903.7	0.047	2903.8	0.047	2902.8	0.056	2904.2	0.051	2902.5	0.054	2905.0
0.051	2906.9	0.047	2905.6	0.047	2904.5	0.056	2905.7	0.051	2904.3	0.054	2905.7
0.051	2908.9	0.047	2907.0	0.048	2906.0	0.056	2907.1	0.051	2906.0	0.054	2907.2
0.051	2909.7	0.047	2908.3	0.048	2907.3	0.056	2908.4	0.051	2907.2	0.054	2908.6
0.051	2911.2	0.047	2909.5	0.048	2908.4	0.056	2910.3	0.051	2908.4	0.054	2910.0
0.051	2912.7	0.047	2911.6	0.048	2910.5	0.056	2912.3	0.051	2910.1	0.054	2911.5

0.051	2914.1	0.047	2914.8	0.048	2913.7	0.056	2914.1	0.051	2913.2	0.054	2913.4
0.051	2915.7	0.047	2916.6	0.048	2915.6	0.056	2915.6	0.051	2915.3	0.055	2915.3
0.051	2917.2	0.047	2917.4	0.048	2916.5	0.056	2917.4	0.051	2916.3	0.055	2917.2
0.051	2919.1	0.047	2919.0	0.048	2918.1	0.056	2918.7	0.051	2917.8	0.055	2918.7
0.051	2921.2	0.047	2920.4	0.048	2919.5	0.056	2920.0	0.051	2919.4	0.055	2920.4
0.051	2922.8	0.047	2921.9	0.048	2921.0	0.056	2921.3	0.051	2920.6	0.055	2921.9
0.051	2924.4	0.047	2923.5	0.048	2922.4	0.056	2923.8	0.051	2922.2	0.055	2923.1
0.051	2926.2	0.048	2925.1	0.048	2924.2	0.056	2926.8	0.051	2923.6	0.055	2924.3
0.051	2927.5	0.048	2927.1	0.048	2926.1	0.056	2928.1	0.051	2925.6	0.055	2926.9
0.051	2928.7	0.048	2929.0	0.048	2927.9	0.056	2929.3	0.051	2927.6	0.055	2929.9
0.052	2930.0	0.048	2930.6	0.048	2929.5	0.056	2930.9	0.051	2929.3	0.055	2931.1
0.052	2932.5	0.048	2932.1	0.048	2931.3	0.057	2932.0	0.051	2931.0	0.055	2932.4
0.052	2935.5	0.048	2933.9	0.048	2932.9	0.057	2933.5	0.051	2932.7	0.055	2933.9
0.052	2937.0	0.048	2935.3	0.048	2934.0	0.057	2935.1	0.051	2934.1	0.055	2935.1
0.052	2937.9	0.048	2936.4	0.048	2935.2	0.057	2937.0	0.051	2935.3	0.055	2936.5
0.052	2939.4	0.048	2938.0	0.048	2937.2	0.057	2938.9	0.051	2936.7	0.055	2938.2
0.052	2940.8	0.048	2940.7	0.048	2940.4	0.057	2940.7	0.051	2938.9	0.055	2940.3
0.052	2942.4	0.048	2943.5	0.048	2942.4	0.057	2942.4	0.051	2941.9	0.055	2942.1
0.052	2943.7	0.048	2944.7	0.048	2943.3	0.057	2944.0	0.052	2943.6	0.055	2943.7
0.052	2945.6	0.048	2945.7	0.048	2944.6	0.057	2945.2	0.052	2944.4	0.055	2945.6
0.052	2947.5	0.048	2947.3	0.048	2946.1	0.057	2946.4	0.052	2946.0	0.055	2947.1
0.052	2949.4	0.048	2948.5	0.048	2947.6	0.057	2948.4	0.052	2947.4	0.055	2948.3
0.052	2951.1	0.048	2950.1	0.048	2949.1	0.057	2951.6	0.052	2948.9	0.055	2949.4
0.052	2952.9	0.048	2951.6	0.048	2950.7	0.057	2953.5	0.052	2950.4	0.055	2951.4
0.052	2954.5	0.048	2953.6	0.048	2952.7	0.057	2954.3	0.052	2952.1	0.055	2954.6
0.052	2955.8	0.048	2955.5	0.048	2954.6	0.057	2956.0	0.052	2954.2	0.055	2956.5
0.052	2956.9	0.048	2957.4	0.048	2956.2	0.057	2957.2	0.052	2956.1	0.055	2957.2
0.052	2958.3	0.048	2958.9	0.048	2958.0	0.057	2958.5	0.052	2957.5	0.055	2958.7
0.052	2960.9	0.048	2960.7	0.048	2959.6	0.057	2960.1	0.052	2959.4	0.055	2960.2
0.052	2963.7	0.048	2962.1	0.048	2960.8	0.057	2962.0	0.052	2961.0	0.055	2961.7
0.052	2965.3	0.048	2963.3	0.048	2962.1	0.057	2963.9	0.052	2962.3	0.055	2963.2
0.052	2966.3	0.048	2964.5	0.049	2963.8	0.057	2965.8	0.052	2963.5	0.055	2965.0
0.052	2967.8	0.048	2966.6	0.049	2966.7	0.057	2967.2	0.052	2965.1	0.055	2967.0
0.052	2969.2	0.048	2969.8	0.049	2969.0	0.057	2969.1	0.052	2967.9	0.055	2968.9
0.052	2970.8	0.048	2971.6	0.049	2970.0	0.057	2970.5	0.052	2970.4	0.056	2970.3
0.052	2972.2	0.048	2972.4	0.049	2971.3	0.057	2971.7	0.052	2971.5	0.056	2972.1
0.052	2974.0	0.048	2974.0	0.049	2972.9	0.057	2972.9	0.052	2972.8	0.056	2973.5
0.052	2976.1	0.048	2975.4	0.049	2974.3	0.057	2975.7	0.052	2974.4	0.056	2974.7
0.052	2978.0	0.048	2977.0	0.049	2975.9	0.057	2978.5	0.052	2975.8	0.056	2975.8
0.052	2979.3	0.048	2978.3	0.049	2977.5	0.057	2979.6	0.052	2977.2	0.056	2978.4
0.052	2981.2	0.048	2980.3	0.049	2979.4	0.057	2980.9	0.052	2978.8	0.056	2981.5
0.052	2982.8	0.048	2982.2	0.049	2981.3	0.057	2982.5	0.052	2980.6	0.056	2982.9
0.052	2984.0	0.049	2984.0	0.049	2982.9	0.057	2983.8	0.052	2982.6	0.056	2984.0
0.052	2985.2	0.049	2985.5	0.049	2984.5	0.057	2985.2	0.052	2984.5	0.056	2985.7
0.052	2986.8	0.049	2987.3	0.049	2986.2	0.058	2986.8	0.052	2985.9	0.056	2986.8
0.052	2989.7	0.049	2989.0	0.049	2987.4	0.058	2988.8	0.052	2987.7	0.056	2988.4
0.053	2992.3	0.049	2990.1	0.049	2988.8	0.058	2990.8	0.052	2989.1	0.056	2989.9
0.053	2993.5	0.049	2991.2	0.049	2990.4	0.058	2992.6	0.052	2990.3	0.056	2991.8
0.053	2994.7	0.049	2993.1	0.049	2993.2	0.058	2993.9	0.052	2991.4	0.056	2993.6
0.053	2996.3	0.049	2996.3	0.049	2995.7	0.058	2995.7	0.052	2993.8	0.056	2995.5
0.053	2997.5	0.049	2998.4	0.049	2996.7	0.058	2997.0	0.052	2996.7	0.056	2997.1
0.053	2999.2	0.049	2999.3	0.049	2998.1	0.058	2998.1	0.052	2998.7	0.056	2998.8
0.053	3000.6	0.049	3000.7	0.049	2999.6	0.058	2999.9	0.052	2999.5	0.056	3000.0
0.053	3002.3	0.049	3002.3	0.049	3000.9	0.058	3003.3	0.053	3001.1	0.056	3001.3
0.053	3004.3	0.049	3003.6	0.049	3002.6	0.058	3005.2	0.053	3002.6	0.056	3002.7
0.053	3006.2	0.049	3005.2	0.049	3004.1	0.058	3006.0	0.053	3004.0	0.056	3005.6
0.053	3007.7	0.049	3006.8	0.049	3006.0	0.058	3007.6	0.053	3005.7	0.056	3008.3

0.053	3009.5	0.049	3008.7	0.049	3007.9	0.058	3009.0	0.053	3007.1	0.056	3009.2
0.053	3011.0	0.049	3010.6	0.049	3009.5	0.058	3010.3	0.053	3009.1	0.056	3010.5
0.053	3012.2	0.049	3012.2	0.049	3011.2	0.058	3012.0	0.053	3011.0	0.056	3012.1
0.053	3013.3	0.049	3013.9	0.049	3012.9	0.058	3013.6	0.053	3012.6	0.056	3013.4
0.053	3015.6	0.049	3015.6	0.049	3014.1	0.058	3015.6	0.053	3014.4	0.056	3014.9
0.053	3018.5	0.049	3017.0	0.049	3015.4	0.058	3017.5	0.053	3015.9	0.056	3016.4
0.053	3020.6	0.049	3018.3	0.049	3017.1	0.058	3018.9	0.053	3017.3	0.056	3018.5
0.053	3021.4	0.049	3019.5	0.049	3019.9	0.058	3020.7	0.053	3018.5	0.056	3020.5
0.053	3022.9	0.049	3021.9	0.050	3022.3	0.058	3022.2	0.053	3020.0	0.056	3022.1
0.053	3024.3	0.049	3024.9	0.050	3023.5	0.058	3023.4	0.053	3022.7	0.056	3024.0
0.053	3025.8	0.049	3026.6	0.050	3024.5	0.058	3024.6	0.053	3025.4	0.057	3025.3
0.053	3027.3	0.049	3027.4	0.050	3026.2	0.058	3027.3	0.053	3026.9	0.057	3026.5
0.053	3028.9	0.049	3028.9	0.050	3027.5	0.058	3030.2	0.053	3027.8	0.057	3027.8
0.053	3030.8	0.049	3030.4	0.050	3029.1	0.058	3031.4	0.053	3029.4	0.057	3029.9
0.053	3032.8	0.049	3031.9	0.050	3030.8	0.058	3032.5	0.053	3030.8	0.057	3033.0
0.053	3034.5	0.049	3033.3	0.050	3032.6	0.058	3034.2	0.053	3032.2	0.057	3034.7
0.053	3036.0	0.049	3035.2	0.050	3034.6	0.058	3035.3	0.053	3033.8	0.057	3035.7
0.053	3037.8	0.049	3037.2	0.050	3036.4	0.058	3036.9	0.053	3035.5	0.057	3037.4
0.053	3039.3	0.049	3039.0	0.050	3037.9	0.058	3038.6	0.053	3037.5	0.057	3038.6
0.053	3040.4	0.049	3040.4	0.050	3039.5	0.058	3040.4	0.053	3039.4	0.057	3040.1
0.053	3041.7	0.049	3042.3	0.050	3040.9	0.059	3042.4	0.053	3040.9	0.057	3041.5
0.053	3043.9	0.050	3043.9	0.050	3042.1	0.059	3044.1	0.053	3042.7	0.057	3043.4
0.053	3046.8	0.050	3045.2	0.050	3043.4	0.059	3045.8	0.053	3044.3	0.057	3045.4
0.053	3048.7	0.050	3046.4	0.050	3046.0	0.059	3047.4	0.053	3045.5	0.057	3047.1
0.053	3049.6	0.050	3047.9	0.050	3048.9	0.059	3048.5	0.053	3046.9	0.057	3048.8
0.054	3051.1	0.050	3050.6	0.050	3050.4	0.059	3049.6	0.053	3048.5	0.057	3050.4
0.054	3052.7	0.050	3053.4	0.050	3051.5	0.059	3051.5	0.053	3051.1	0.057	3051.6
0.054	3054.1	0.050	3054.7	0.050	3053.0	0.059	3054.7	0.053	3053.5	0.057	3052.9
0.054	3055.6	0.050	3055.7	0.050	3054.4	0.059	3056.6	0.053	3054.8	0.057	3054.3
0.054	3057.2	0.050	3057.3	0.050	3055.9	0.059	3057.5	0.053	3056.1	0.057	3057.1
0.054	3059.3	0.050	3058.6	0.050	3057.4	0.059	3059.1	0.053	3057.9	0.057	3059.8
0.054	3061.1	0.050	3060.2	0.050	3059.4	0.059	3060.5	0.053	3059.1	0.057	3061.0
0.054	3062.9	0.050	3061.7	0.050	3061.3	0.059	3062.0	0.054	3060.6	0.057	3062.2
0.054	3064.3	0.050	3063.7	0.050	3063.0	0.059	3063.7	0.054	3062.1	0.057	3063.9
0.054	3066.2	0.050	3065.5	0.050	3064.5	0.059	3065.3	0.054	3064.0	0.057	3065.2
0.054	3067.6	0.050	3067.4	0.050	3066.3	0.059	3067.2	0.054	3066.0	0.057	3066.6
0.054	3068.7	0.050	3068.8	0.050	3067.7	0.059	3069.1	0.054	3067.8	0.057	3068.1
0.054	3070.0	0.050	3070.7	0.050	3068.9	0.059	3070.6	0.054	3069.2	0.057	3070.1
0.054	3072.3	0.050	3072.2	0.050	3070.2	0.059	3072.3	0.054	3071.0	0.057	3072.0
0.054	3075.3	0.050	3073.4	0.050	3072.5	0.059	3073.8	0.054	3072.5	0.057	3073.9
0.054	3077.2	0.050	3074.6	0.050	3075.5	0.059	3075.0	0.054	3073.7	0.057	3075.5
0.054	3078.0	0.050	3076.6	0.050	3077.3	0.059	3076.1	0.054	3074.9	0.057	3077.0
0.054	3079.6	0.050	3079.8	0.050	3078.2	0.059	3078.7	0.054	3076.8	0.057	3078.3
0.054	3081.0	0.050	3081.8	0.051	3079.6	0.059	3081.6	0.054	3079.9	0.057	3079.5
0.054	3082.4	0.050	3082.6	0.051	3081.1	0.059	3083.3	0.054	3082.0	0.058	3081.3
0.054	3084.0	0.050	3084.0	0.051	3082.6	0.059	3084.2	0.054	3082.9	0.058	3084.5
0.054	3085.5	0.050	3085.6	0.051	3084.1	0.059	3086.0	0.054	3084.4	0.058	3086.6
0.054	3087.5	0.050	3086.9	0.051	3085.9	0.059	3087.2	0.054	3086.1	0.058	3087.3
0.054	3089.5	0.050	3088.5	0.051	3087.8	0.059	3088.7	0.054	3087.4	0.058	3089.0
0.054	3091.0	0.050	3090.0	0.051	3089.7	0.059	3090.2	0.054	3088.9	0.058	3090.3
0.054	3092.9	0.050	3091.9	0.051	3091.1	0.059	3092.1	0.054	3090.4	0.058	3091.6
0.054	3094.5	0.050	3094.0	0.051	3092.9	0.059	3094.1	0.054	3092.3	0.058	3093.1
0.054	3095.9	0.050	3095.6	0.051	3094.4	0.059	3095.8	0.054	3094.2	0.058	3094.9
0.054	3097.1	0.050	3097.3	0.051	3095.6	0.060	3097.3	0.054	3096.0	0.058	3097.0
0.054	3098.3	0.050	3099.0	0.051	3096.6	0.060	3099.0	0.054	3097.6	0.058	3098.8
0.054	3100.8	0.050	3100.4	0.051	3099.0	0.060	3100.3	0.054	3099.3	0.058	3100.3
0.054	3103.8	0.051	3101.5	0.051	3102.2	0.060	3101.6	0.054	3100.7	0.058	3102.2

0.054	3105.4	0.051	3102.8	0.051	3103.9	0.060	3103.2	0.054	3102.0	0.058	3103.8
0.054	3106.2	0.051	3105.5	0.051	3104.8	0.060	3106.2	0.054	3103.2	0.058	3104.9
0.054	3107.8	0.051	3108.3	0.051	3106.3	0.060	3108.6	0.054	3105.7	0.058	3105.9
0.054	3109.2	0.051	3109.7	0.051	3107.6	0.060	3109.4	0.054	3108.7	0.058	3108.4
0.055	3110.7	0.051	3110.9	0.051	3109.2	0.060	3110.8	0.054	3110.3	0.058	3111.4
0.055	3112.2	0.051	3112.4	0.051	3110.6	0.060	3112.2	0.054	3111.3	0.058	3113.0
0.055	3114.0	0.051	3113.6	0.051	3112.7	0.060	3113.6	0.054	3112.8	0.058	3113.9
0.055	3115.9	0.051	3115.2	0.051	3114.5	0.060	3115.2	0.054	3114.2	0.058	3115.7
0.055	3117.9	0.051	3116.8	0.051	3116.3	0.060	3117.0	0.054	3115.6	0.058	3116.9
0.055	3119.3	0.051	3118.6	0.051	3118.0	0.060	3119.1	0.054	3117.1	0.058	3118.4
0.055	3121.4	0.051	3120.4	0.051	3119.8	0.060	3120.9	0.054	3118.7	0.058	3119.8
0.055	3122.7	0.051	3122.4	0.051	3121.1	0.060	3122.4	0.055	3120.7	0.058	3121.7
0.055	3124.1	0.051	3123.8	0.051	3122.3	0.060	3124.1	0.055	3122.6	0.058	3123.8
0.055	3125.3	0.051	3125.7	0.051	3123.4	0.060	3125.6	0.055	3124.2	0.058	3125.6
0.055	3126.8	0.051	3127.2	0.051	3125.7	0.060	3126.8	0.055	3126.1	0.058	3126.9
0.055	3129.8	0.051	3128.4	0.051	3128.7	0.060	3127.9	0.055	3127.6	0.058	3128.7
0.055	3132.2	0.051	3129.5	0.051	3130.6	0.060	3130.5	0.055	3129.0	0.058	3130.1
0.055	3133.5	0.051	3131.5	0.051	3131.4	0.060	3133.5	0.055	3130.2	0.058	3131.4
0.055	3134.7	0.051	3134.6	0.051	3132.9	0.060	3134.9	0.055	3131.6	0.058	3132.7
0.055	3136.1	0.051	3136.6	0.051	3134.4	0.060	3135.9	0.055	3134.3	0.058	3135.7
0.055	3137.5	0.051	3137.6	0.052	3135.9	0.060	3137.5	0.055	3137.0	0.059	3138.1
0.055	3139.1	0.051	3139.1	0.052	3137.3	0.060	3138.7	0.055	3138.4	0.059	3139.2
0.055	3140.6	0.051	3140.6	0.052	3139.0	0.060	3140.3	0.055	3139.5	0.059	3140.6
0.055	3142.5	0.051	3142.0	0.052	3141.2	0.060	3141.8	0.055	3141.1	0.059	3142.2
0.055	3144.3	0.051	3143.5	0.052	3143.0	0.060	3143.9	0.055	3142.5	0.059	3143.4
0.055	3146.3	0.051	3145.1	0.052	3144.5	0.060	3145.8	0.055	3144.0	0.059	3145.0
0.055	3147.5	0.051	3146.9	0.052	3146.2	0.060	3147.4	0.055	3145.4	0.059	3146.5
0.055	3149.4	0.051	3148.9	0.052	3147.9	0.060	3148.7	0.055	3147.2	0.059	3148.5
0.055	3151.0	0.051	3150.7	0.052	3149.2	0.060	3150.6	0.055	3149.0	0.059	3150.5
0.055	3152.2	0.051	3152.1	0.052	3150.3	0.061	3151.9	0.055	3151.2	0.059	3152.0
0.055	3153.5	0.051	3154.0	0.052	3152.0	0.061	3153.2	0.055	3152.8	0.059	3153.7
0.055	3155.1	0.051	3155.3	0.052	3155.0	0.061	3154.6	0.055	3154.2	0.059	3155.2
0.055	3158.2	0.051	3156.6	0.052	3157.5	0.061	3157.5	0.055	3156.0	0.059	3156.5
0.055	3160.2	0.051	3157.7	0.052	3158.4	0.061	3160.1	0.055	3157.4	0.059	3157.8
0.055	3161.6	0.051	3160.0	0.052	3159.7	0.061	3161.4	0.055	3158.6	0.059	3159.6
0.055	3162.8	0.052	3163.2	0.052	3161.3	0.061	3162.6	0.055	3159.9	0.059	3162.8
0.055	3164.5	0.052	3165.1	0.052	3162.6	0.061	3164.2	0.055	3162.5	0.059	3165.0
0.055	3165.9	0.052	3165.8	0.052	3164.1	0.061	3165.5	0.055	3165.4	0.059	3165.7
0.055	3167.3	0.052	3167.4	0.052	3165.6	0.061	3167.0	0.055	3166.9	0.059	3167.2
0.055	3168.8	0.052	3168.9	0.052	3167.6	0.061	3168.5	0.055	3167.9	0.059	3168.6
0.056	3170.9	0.052	3170.4	0.052	3169.6	0.061	3170.5	0.055	3169.5	0.059	3170.0
0.056	3172.7	0.052	3171.8	0.052	3171.2	0.061	3172.4	0.055	3170.8	0.059	3171.7
0.056	3174.4	0.052	3173.4	0.052	3172.9	0.061	3174.0	0.055	3172.3	0.059	3173.4
0.056	3176.1	0.052	3175.3	0.052	3174.6	0.061	3175.7	0.055	3174.0	0.059	3175.2
0.056	3177.9	0.052	3177.2	0.052	3176.0	0.061	3177.4	0.055	3175.6	0.059	3177.1
0.056	3179.4	0.052	3178.5	0.052	3177.1	0.061	3178.5	0.055	3177.4	0.059	3178.6
0.056	3180.5	0.052	3180.7	0.052	3178.6	0.061	3179.5	0.055	3179.3	0.059	3180.5
0.056	3181.8	0.052	3182.3	0.052	3181.2	0.061	3181.7	0.056	3180.9	0.059	3181.9
0.056	3183.9	0.052	3183.5	0.052	3184.2	0.061	3184.9	0.056	3182.6	0.059	3183.2
0.056	3186.9	0.052	3184.9	0.052	3184.8	0.061	3186.9	0.056	3184.2	0.059	3184.2
0.056	3188.9	0.052	3186.2	0.052	3186.2	0.061	3187.7	0.056	3185.7	0.059	3186.4
0.056	3189.8	0.052	3189.0	0.052	3187.9	0.061	3189.1	0.056	3187.0	0.059	3189.6
0.056	3191.1	0.052	3191.6	0.052	3189.2	0.061	3190.5	0.056	3188.4	0.059	3191.4
0.056	3192.6	0.052	3193.1	0.052	3190.7	0.061	3192.0	0.056	3191.0	0.060	3192.2
0.056	3194.1	0.052	3194.1	0.052	3192.4	0.061	3193.4	0.056	3193.8	0.060	3193.9
0.056	3195.6	0.052	3195.6	0.053	3194.2	0.061	3195.2	0.056	3195.1	0.060	3195.1
0.056	3197.2	0.052	3197.0	0.053	3196.2	0.061	3197.4	0.056	3196.1	0.060	3196.7

0.056	3199.2	0.052	3198.6	0.053	3198.1	0.061	3199.1	0.056	3197.8	0.060	3198.4
0.056	3200.9	0.052	3200.1	0.053	3199.7	0.061	3200.7	0.056	3199.0	0.060	3200.0
0.056	3202.8	0.052	3201.9	0.053	3201.5	0.061	3202.5	0.056	3200.5	0.060	3202.2
0.056	3204.7	0.052	3203.9	0.053	3202.8	0.061	3203.9	0.056	3202.1	0.060	3204.0
0.056	3206.3	0.052	3205.6	0.053	3204.0	0.061	3205.2	0.056	3204.0	0.060	3205.3
0.056	3207.6	0.052	3207.2	0.053	3205.1	0.061	3206.2	0.056	3205.9	0.060	3207.0
0.056	3208.6	0.052	3209.0	0.053	3207.4	0.062	3208.5	0.056	3207.8	0.060	3208.5
0.056	3210.0	0.052	3210.6	0.053	3210.5	0.062	3211.5	0.056	3209.2	0.060	3209.8
0.056	3212.8	0.052	3211.9	0.053	3212.2	0.062	3213.3	0.056	3211.1	0.060	3211.0
0.056	3215.5	0.052	3213.1	0.053	3213.1	0.062	3214.2	0.056	3212.5	0.060	3213.6
0.056	3216.8	0.052	3214.7	0.053	3214.6	0.062	3215.8	0.056	3213.8	0.060	3216.6
0.056	3218.0	0.052	3217.6	0.053	3216.2	0.062	3217.1	0.056	3214.9	0.060	3217.9
0.056	3219.6	0.052	3220.0	0.053	3217.5	0.062	3218.7	0.056	3216.9	0.060	3219.0
0.056	3221.1	0.053	3221.0	0.053	3219.1	0.062	3220.2	0.056	3219.8	0.060	3220.7
0.056	3222.4	0.053	3222.4	0.053	3220.9	0.062	3222.2	0.056	3221.9	0.060	3221.9
0.056	3223.9	0.053	3224.1	0.053	3222.8	0.062	3224.1	0.056	3222.9	0.060	3223.4
0.056	3225.6	0.053	3225.4	0.053	3224.6	0.062	3225.7	0.056	3224.5	0.060	3224.9
0.056	3227.6	0.053	3226.9	0.053	3226.2	0.062	3227.3	0.056	3226.1	0.060	3226.9
0.057	3229.4	0.053	3228.4	0.053	3228.0	0.062	3229.0	0.056	3227.4	0.060	3228.8
0.057	3231.1	0.053	3230.4	0.053	3229.4	0.062	3230.5	0.056	3229.0	0.060	3230.5
0.057	3232.8	0.053	3232.2	0.053	3230.6	0.062	3231.5	0.056	3230.6	0.060	3232.0
0.057	3234.3	0.053	3234.0	0.053	3232.0	0.062	3232.9	0.056	3232.3	0.060	3233.7
0.057	3235.7	0.053	3235.5	0.053	3233.6	0.062	3235.7	0.056	3234.3	0.060	3235.0
0.057	3237.0	0.053	3237.2	0.053	3236.4	0.062	3238.5	0.056	3236.0	0.060	3236.2
0.057	3238.3	0.053	3238.7	0.053	3239.0	0.062	3239.7	0.056	3237.5	0.060	3237.9
0.057	3240.8	0.053	3239.9	0.053	3240.0	0.062	3241.0	0.056	3239.2	0.060	3241.0
0.057	3243.7	0.053	3241.2	0.053	3241.4	0.062	3242.4	0.057	3240.7	0.060	3243.3
0.057	3245.4	0.053	3243.2	0.053	3242.9	0.062	3243.7	0.057	3242.1	0.060	3244.1
0.057	3246.3	0.053	3246.3	0.053	3244.3	0.062	3245.3	0.057	3243.3	0.060	3245.5
0.057	3247.9	0.053	3248.3	0.053	3245.9	0.062	3246.9	0.057	3245.1	0.060	3247.0
0.057	3249.4	0.053	3249.2	0.053	3247.4	0.062	3248.8	0.057	3248.2	0.061	3248.4
0.057	3250.6	0.053	3250.6	0.053	3249.3	0.062	3250.7	0.057	3250.3	0.061	3250.0
0.057	3252.2	0.053	3252.3	0.053	3251.2	0.062	3252.3	0.057	3251.4	0.061	3251.6
0.057	3253.9	0.053	3253.7	0.054	3253.0	0.062	3253.9	0.057	3252.8	0.061	3253.6
0.057	3255.8	0.053	3255.2	0.054	3254.6	0.062	3255.8	0.057	3254.4	0.061	3255.5
0.057	3257.7	0.053	3256.7	0.054	3256.3	0.062	3257.0	0.057	3255.7	0.061	3256.9
0.057	3259.5	0.053	3258.6	0.054	3257.7	0.062	3258.2	0.057	3257.2	0.061	3258.7
0.057	3261.1	0.053	3260.5	0.054	3258.9	0.062	3259.8	0.057	3258.8	0.061	3260.4
0.057	3262.7	0.053	3262.4	0.054	3260.1	0.062	3262.8	0.057	3260.7	0.061	3261.6
0.057	3264.1	0.053	3263.9	0.054	3262.5	0.063	3265.2	0.057	3262.5	0.061	3262.9
0.057	3265.4	0.053	3265.6	0.054	3265.6	0.063	3266.4	0.057	3264.3	0.061	3264.6
0.057	3266.6	0.053	3267.0	0.054	3267.3	0.063	3267.5	0.057	3265.8	0.061	3267.6
0.057	3269.1	0.053	3268.3	0.054	3268.1	0.063	3269.1	0.057	3267.6	0.061	3269.8
0.057	3272.1	0.053	3269.6	0.054	3269.6	0.063	3270.3	0.057	3269.1	0.061	3270.7
0.057	3273.8	0.053	3272.0	0.054	3271.0	0.063	3271.9	0.057	3270.4	0.061	3272.3
0.057	3274.6	0.053	3275.0	0.054	3272.5	0.063	3273.5	0.057	3271.6	0.061	3273.7
0.057	3276.3	0.053	3276.6	0.054	3274.1	0.063	3275.6	0.057	3273.6	0.061	3275.1
0.057	3277.8	0.053	3277.4	0.054	3275.8	0.063	3277.5	0.057	3276.7	0.061	3276.6
0.057	3279.1	0.053	3279.0	0.054	3277.7	0.063	3278.9	0.057	3278.8	0.061	3278.3
0.057	3280.6	0.054	3280.6	0.054	3279.6	0.063	3280.8	0.057	3279.7	0.061	3280.3
0.057	3282.3	0.054	3281.9	0.054	3281.2	0.063	3282.4	0.057	3281.1	0.061	3282.2
0.057	3284.1	0.054	3283.4	0.054	3283.0	0.063	3283.6	0.057	3282.6	0.061	3283.7
0.057	3286.1	0.054	3285.2	0.054	3284.5	0.063	3284.8	0.057	3283.9	0.061	3285.4
0.057	3287.9	0.054	3287.1	0.054	3285.7	0.063	3286.4	0.057	3285.6	0.061	3286.9
0.057	3289.4	0.054	3289.0	0.054	3287.0	0.063	3289.3	0.057	3287.0	0.061	3288.2
0.058	3291.2	0.054	3290.6	0.054	3288.9	0.063	3291.8	0.057	3289.0	0.061	3289.4
0.058	3292.7	0.054	3292.4	0.054	3291.7	0.063	3292.8	0.057	3291.0	0.061	3291.5

0.058	3293.9	0.054	3294.1	0.054	3294.0	0.063	3294.1	0.057	3292.7	0.061	3294.6
0.058	3294.9	0.054	3295.2	0.054	3294.8	0.063	3295.7	0.057	3294.2	0.061	3296.5
0.058	3297.3	0.054	3296.6	0.054	3296.3	0.063	3297.1	0.057	3296.0	0.061	3297.3
0.058	3300.4	0.054	3297.9	0.054	3298.1	0.063	3298.6	0.057	3297.5	0.061	3298.9
0.058	3302.1	0.054	3300.7	0.054	3299.3	0.063	3300.2	0.057	3298.8	0.061	3300.3
0.058	3302.9	0.054	3303.3	0.054	3300.7	0.063	3302.4	0.058	3300.1	0.061	3301.8
0.058	3304.6	0.054	3304.6	0.054	3302.4	0.063	3304.3	0.058	3302.1	0.061	3303.4
0.058	3306.1	0.054	3305.8	0.054	3304.4	0.063	3305.7	0.058	3305.0	0.062	3305.0
0.058	3307.5	0.054	3307.4	0.054	3306.2	0.063	3307.4	0.058	3307.1	0.062	3307.0
0.058	3309.0	0.054	3308.7	0.054	3307.9	0.063	3309.0	0.058	3308.0	0.062	3308.8
0.058	3310.6	0.054	3310.2	0.054	3309.6	0.063	3310.2	0.058	3309.4	0.062	3310.2
0.058	3312.6	0.054	3311.7	0.055	3311.2	0.063	3311.4	0.058	3311.0	0.062	3312.2
0.058	3314.6	0.054	3313.5	0.055	3312.4	0.063	3313.3	0.058	3312.3	0.062	3313.6
0.058	3316.2	0.054	3315.6	0.055	3313.8	0.063	3316.5	0.058	3313.9	0.062	3314.8
0.058	3317.6	0.054	3317.4	0.055	3315.1	0.063	3318.5	0.058	3315.5	0.062	3315.9
0.058	3319.5	0.054	3318.9	0.055	3317.9	0.063	3319.4	0.058	3317.4	0.062	3318.5
0.058	3320.9	0.054	3320.6	0.055	3320.6	0.064	3320.8	0.058	3319.4	0.062	3321.6
0.058	3322.0	0.054	3322.2	0.055	3322.0	0.064	3322.2	0.058	3321.0	0.062	3323.1
0.058	3323.4	0.054	3323.5	0.055	3323.1	0.064	3323.7	0.058	3322.4	0.062	3323.9
0.058	3325.6	0.054	3324.5	0.055	3324.9	0.064	3325.1	0.058	3324.3	0.062	3325.5
0.058	3328.8	0.054	3326.4	0.055	3326.0	0.064	3326.9	0.058	3325.8	0.062	3326.7
0.058	3330.5	0.054	3329.6	0.055	3327.5	0.064	3328.9	0.058	3327.1	0.062	3328.4
0.058	3331.3	0.054	3331.6	0.055	3329.0	0.064	3330.6	0.058	3328.4	0.062	3329.9
0.058	3333.0	0.054	3332.6	0.055	3330.9	0.064	3332.1	0.058	3330.3	0.062	3331.9
0.058	3334.5	0.054	3334.0	0.055	3332.6	0.064	3334.0	0.058	3333.3	0.062	3333.8
0.058	3335.9	0.054	3335.6	0.055	3334.6	0.064	3335.7	0.058	3335.3	0.062	3335.5
0.058	3337.3	0.054	3336.9	0.055	3336.1	0.064	3336.9	0.058	3336.2	0.062	3337.1
0.058	3338.9	0.054	3338.6	0.055	3337.9	0.064	3338.1	0.058	3337.7	0.062	3338.8
0.058	3340.8	0.055	3340.1	0.055	3339.4	0.064	3340.2	0.058	3339.5	0.062	3340.1
0.058	3342.8	0.055	3341.9	0.055	3340.5	0.064	3343.4	0.058	3340.7	0.062	3341.3
0.058	3344.5	0.055	3343.7	0.055	3341.8	0.064	3345.1	0.058	3342.3	0.062	3342.7
0.058	3345.8	0.055	3345.6	0.055	3343.9	0.064	3345.8	0.058	3343.8	0.062	3345.3
0.058	3347.7	0.055	3347.0	0.055	3347.1	0.064	3347.5	0.058	3345.6	0.062	3348.1
0.058	3349.2	0.055	3348.8	0.055	3349.0	0.064	3348.8	0.058	3347.6	0.062	3349.3
0.059	3350.5	0.055	3350.4	0.055	3349.8	0.064	3350.4	0.058	3349.4	0.062	3350.5
0.059	3351.7	0.055	3351.7	0.055	3351.4	0.064	3351.8	0.058	3350.7	0.062	3352.1
0.059	3353.9	0.055	3352.9	0.055	3352.8	0.064	3353.6	0.058	3352.7	0.062	3353.4
0.059	3357.1	0.055	3355.0	0.055	3354.2	0.064	3355.7	0.058	3354.2	0.062	3354.9
0.059	3358.8	0.055	3358.3	0.055	3355.7	0.064	3357.5	0.058	3355.4	0.062	3356.5
0.059	3359.6	0.055	3360.0	0.055	3357.4	0.064	3359.0	0.058	3356.7	0.062	3358.6
0.059	3361.1	0.055	3360.9	0.055	3359.4	0.064	3360.9	0.058	3358.7	0.063	3360.6
0.059	3362.7	0.055	3362.4	0.055	3361.3	0.064	3362.2	0.059	3361.6	0.063	3362.1
0.059	3364.0	0.055	3363.9	0.055	3362.8	0.064	3363.5	0.059	3363.7	0.063	3363.8
0.059	3365.6	0.055	3365.2	0.055	3364.6	0.064	3364.5	0.059	3364.8	0.063	3365.5
0.059	3367.3	0.055	3366.8	0.055	3366.3	0.064	3366.8	0.059	3365.9	0.063	3366.7
0.059	3369.1	0.055	3368.5	0.055	3367.6	0.064	3369.9	0.059	3367.6	0.063	3367.8
0.059	3371.1	0.055	3370.3	0.056	3368.8	0.064	3371.7	0.059	3369.0	0.063	3369.3
0.059	3372.8	0.055	3372.2	0.056	3370.2	0.064	3372.5	0.059	3370.4	0.063	3372.5
0.059	3374.2	0.055	3374.0	0.056	3373.1	0.064	3374.1	0.059	3371.9	0.063	3374.9
0.059	3376.2	0.055	3375.5	0.056	3375.7	0.064	3375.5	0.059	3373.9	0.063	3375.9
0.059	3377.6	0.055	3377.3	0.056	3376.8	0.064	3377.1	0.059	3376.0	0.063	3377.1
0.059	3378.8	0.055	3378.6	0.056	3378.1	0.065	3378.5	0.059	3377.8	0.063	3378.8
0.059	3380.0	0.055	3379.9	0.056	3379.7	0.065	3380.4	0.059	3379.3	0.063	3380.0
0.059	3382.0	0.055	3381.1	0.056	3381.1	0.065	3382.5	0.059	3381.0	0.063	3381.7
0.059	3385.0	0.055	3383.6	0.056	3382.5	0.065	3384.1	0.059	3382.7	0.063	3383.4
0.059	3387.2	0.055	3386.6	0.056	3384.1	0.065	3385.6	0.059	3384.0	0.063	3385.2
0.059	3388.1	0.055	3388.2	0.056	3385.9	0.065	3387.5	0.059	3385.1	0.063	3387.2

0.059	3389.6	0.055	3389.0	0.056	3387.9	0.065	3388.8	0.059	3386.7	0.063	3388.7
0.059	3391.1	0.055	3390.7	0.056	3389.7	0.065	3390.1	0.059	3389.6	0.063	3390.4
0.059	3392.6	0.055	3392.1	0.056	3391.2	0.065	3391.2	0.059	3392.1	0.063	3392.1
0.059	3394.0	0.055	3393.6	0.056	3392.9	0.065	3393.7	0.059	3393.2	0.063	3393.4
0.059	3395.7	0.055	3395.3	0.056	3394.4	0.065	3396.9	0.059	3394.4	0.063	3394.6
0.059	3397.4	0.055	3396.8	0.056	3395.7	0.065	3398.4	0.059	3396.0	0.063	3396.4
0.059	3399.5	0.056	3398.7	0.056	3396.8	0.065	3399.4	0.059	3397.4	0.063	3399.3
0.059	3401.2	0.056	3400.6	0.056	3399.0	0.065	3401.0	0.059	3398.9	0.063	3401.7
0.059	3402.5	0.056	3402.3	0.056	3402.1	0.065	3402.2	0.059	3400.5	0.063	3402.6
0.059	3404.4	0.056	3403.9	0.056	3403.9	0.065	3403.7	0.059	3402.4	0.063	3403.9
0.059	3406.0	0.056	3405.5	0.056	3404.8	0.065	3405.2	0.059	3404.3	0.063	3405.4
0.059	3407.2	0.056	3406.8	0.056	3406.4	0.065	3407.1	0.059	3406.2	0.063	3406.8
0.059	3408.3	0.056	3408.1	0.056	3407.8	0.065	3408.9	0.059	3407.4	0.063	3408.3
0.059	3410.4	0.056	3409.6	0.056	3409.2	0.065	3410.8	0.059	3409.4	0.063	3409.9
0.060	3413.6	0.056	3412.6	0.056	3410.9	0.065	3412.4	0.059	3411.0	0.063	3412.0
0.060	3415.6	0.056	3415.0	0.056	3412.5	0.065	3414.1	0.059	3412.2	0.063	3413.9
0.060	3416.4	0.056	3416.3	0.056	3414.3	0.065	3415.5	0.059	3413.3	0.063	3415.2
0.060	3417.9	0.056	3417.4	0.056	3416.2	0.065	3416.7	0.059	3415.0	0.064	3417.0
0.060	3419.6	0.056	3419.1	0.056	3417.9	0.065	3417.9	0.059	3418.2	0.064	3418.8
0.060	3420.9	0.056	3420.4	0.056	3419.5	0.065	3420.6	0.059	3420.3	0.064	3420.0
0.060	3422.4	0.056	3421.8	0.056	3421.0	0.065	3423.6	0.059	3421.6	0.064	3421.2
0.060	3424.0	0.056	3423.4	0.056	3422.4	0.065	3424.9	0.060	3422.9	0.064	3423.1
0.060	3425.9	0.056	3425.2	0.056	3423.8	0.065	3425.7	0.060	3424.4	0.064	3426.1
0.060	3427.9	0.056	3427.2	0.056	3425.3	0.065	3427.5	0.060	3425.7	0.064	3428.2
0.060	3429.5	0.056	3428.9	0.057	3428.4	0.065	3428.8	0.060	3427.3	0.064	3429.0
0.060	3430.9	0.056	3430.4	0.057	3430.8	0.065	3430.2	0.060	3428.7	0.064	3430.3
0.060	3432.8	0.056	3432.2	0.057	3431.8	0.065	3431.8	0.060	3430.5	0.064	3432.0
0.060	3434.2	0.056	3433.9	0.057	3433.1	0.066	3433.7	0.060	3432.4	0.064	3433.4
0.060	3435.4	0.056	3435.1	0.057	3434.6	0.066	3435.6	0.060	3434.3	0.064	3434.9
0.060	3436.7	0.056	3436.3	0.057	3435.8	0.066	3437.4	0.060	3435.7	0.064	3436.5
0.060	3438.8	0.056	3438.1	0.057	3437.5	0.066	3439.1	0.060	3437.5	0.064	3438.8
0.060	3442.0	0.056	3441.2	0.057	3439.0	0.066	3440.7	0.060	3439.3	0.064	3440.5
0.060	3443.9	0.056	3443.5	0.057	3441.0	0.066	3442.0	0.060	3440.5	0.064	3441.9
0.060	3444.7	0.056	3444.4	0.057	3442.8	0.066	3443.3	0.060	3441.8	0.064	3443.9
0.060	3446.1	0.056	3445.7	0.057	3444.6	0.066	3444.6	0.060	3443.4	0.064	3445.3
0.060	3447.8	0.056	3447.3	0.057	3446.0	0.066	3447.3	0.060	3446.1	0.064	3446.6
0.060	3449.1	0.056	3448.7	0.057	3447.9	0.066	3449.9	0.060	3448.7	0.064	3447.7
0.060	3450.6	0.056	3450.1	0.057	3449.3	0.066	3451.3	0.060	3450.1	0.064	3449.6
0.060	3452.2	0.056	3451.6	0.057	3450.6	0.066	3452.5	0.060	3451.0	0.064	3452.9
0.060	3454.2	0.056	3453.4	0.057	3451.6	0.066	3454.3	0.060	3452.7	0.064	3454.8
0.060	3456.2	0.056	3455.6	0.057	3454.0	0.066	3455.5	0.060	3454.0	0.064	3455.6
0.060	3457.8	0.056	3457.3	0.057	3457.1	0.066	3456.9	0.060	3455.5	0.064	3457.1
0.060	3459.3	0.057	3458.8	0.057	3458.8	0.066	3458.4	0.060	3457.0	0.064	3458.6
0.060	3461.1	0.057	3460.6	0.057	3459.7	0.066	3460.5	0.060	3459.0	0.064	3460.1
0.060	3462.6	0.057	3462.2	0.057	3461.3	0.066	3462.4	0.060	3460.9	0.064	3461.6
0.060	3463.9	0.057	3463.5	0.057	3462.8	0.066	3464.1	0.060	3462.7	0.064	3463.3
0.060	3465.1	0.057	3464.8	0.057	3464.3	0.066	3465.7	0.060	3464.1	0.064	3465.3
0.060	3467.1	0.057	3466.3	0.057	3465.9	0.066	3467.4	0.060	3465.9	0.064	3467.1
0.060	3470.1	0.057	3469.1	0.057	3467.4	0.066	3468.7	0.060	3467.6	0.064	3468.4
0.061	3472.2	0.057	3471.5	0.057	3469.3	0.066	3469.9	0.060	3469.0	0.064	3470.4
0.061	3473.1	0.057	3472.8	0.057	3471.3	0.066	3471.3	0.060	3470.2	0.064	3472.0
0.061	3474.4	0.057	3474.0	0.057	3473.0	0.066	3474.0	0.060	3471.5	0.065	3473.2
0.061	3476.1	0.057	3475.6	0.057	3474.5	0.066	3476.7	0.060	3474.1	0.065	3474.6
0.061	3477.5	0.057	3477.0	0.057	3476.1	0.066	3478.0	0.060	3477.0	0.065	3476.2
0.061	3479.0	0.057	3478.6	0.057	3477.4	0.066	3479.2	0.060	3478.5	0.065	3479.3
0.061	3480.6	0.057	3480.1	0.057	3478.8	0.066	3480.9	0.060	3479.4	0.065	3481.5
0.061	3482.6	0.057	3482.0	0.057	3480.3	0.066	3482.2	0.060	3481.0	0.065	3482.4

0.061	3484.4	0.057	3483.9	0.057	3483.2	0.066	3483.6	0.061	3482.5	0.065	3483.7
0.061	3486.3	0.057	3485.8	0.057	3485.7	0.066	3485.1	0.061	3484.0	0.065	3485.4
0.061	3487.6	0.057	3487.2	0.058	3486.8	0.066	3487.1	0.061	3485.4	0.065	3486.7
0.061	3489.4	0.057	3488.9	0.058	3488.1	0.066	3489.0	0.061	3487.2	0.065	3488.2
0.061	3491.0	0.057	3490.5	0.058	3489.9	0.067	3490.8	0.061	3489.4	0.065	3489.8
0.061	3492.3	0.057	3491.8	0.058	3491.1	0.067	3492.5	0.061	3491.1	0.065	3491.9
0.061	3493.5	0.057	3493.1	0.058	3492.6	0.067	3494.1	0.061	3492.7	0.065	3493.8
0.061	3495.2	0.057	3494.7	0.058	3494.2	0.067	3495.3	0.061	3494.3	0.065	3495.3
0.061	3498.0	0.057	3497.4	0.058	3496.0	0.067	3496.7	0.061	3496.1	0.065	3497.3
0.061	3500.6	0.057	3500.0	0.058	3497.8	0.067	3498.2	0.061	3497.4	0.065	3498.7
0.061	3501.8	0.057	3501.2	0.058	3499.6	0.067	3501.2	0.061	3498.7	0.065	3500.0
0.061	3502.9	0.057	3502.5	0.058	3501.1	0.067	3503.7	0.061	3499.9	0.065	3501.2
0.061	3504.5	0.057	3504.0	0.058	3502.9	0.067	3504.4	0.061	3502.3	0.065	3503.0
0.061	3505.8	0.057	3505.4	0.058	3504.4	0.067	3505.8	0.061	3505.4	0.065	3505.9
0.061	3507.5	0.057	3507.0	0.058	3505.6	0.067	3507.5	0.061	3507.1	0.065	3508.2
0.061	3509.0	0.057	3508.5	0.058	3506.7	0.067	3508.7	0.061	3507.9	0.065	3509.1
0.061	3510.7	0.057	3510.2	0.058	3509.0	0.067	3510.2	0.061	3509.3	0.065	3510.5
0.061	3512.7	0.057	3512.2	0.058	3512.2	0.067	3511.9	0.061	3510.9	0.065	3512.1
0.061	3514.5	0.057	3514.0	0.058	3514.0	0.067	3513.7	0.061	3512.3	0.065	3513.5
0.061	3515.8	0.057	3515.4	0.058	3514.8	0.067	3515.7	0.061	3513.9	0.065	3515.0
0.061	3517.8	0.057	3517.3	0.058	3516.4	0.067	3517.4	0.061	3515.4	0.065	3516.7
0.061	3519.5	0.057	3518.9	0.058	3517.8	0.067	3519.1	0.061	3517.4	0.065	3518.6
0.061	3520.7	0.058	3520.2	0.058	3519.2	0.067	3520.8	0.061	3519.3	0.065	3520.4
0.061	3521.9	0.058	3521.2	0.058	3520.7	0.067	3522.0	0.061	3521.0	0.065	3522.1
0.061	3523.7	0.058	3523.2	0.058	3522.5	0.067	3523.1	0.061	3522.7	0.065	3523.8
0.061	3526.4	0.058	3526.2	0.058	3524.5	0.067	3524.7	0.061	3524.3	0.065	3525.3
0.061	3528.9	0.058	3528.5	0.058	3526.4	0.067	3527.8	0.061	3525.9	0.065	3526.6
0.061	3530.1	0.058	3529.4	0.058	3527.8	0.067	3530.1	0.061	3527.1	0.065	3527.8
0.061	3531.1	0.058	3530.7	0.058	3529.7	0.067	3531.0	0.061	3528.4	0.065	3529.6
0.062	3532.8	0.058	3532.3	0.058	3531.2	0.067	3532.6	0.061	3530.4	0.066	3532.4
0.062	3534.1	0.058	3533.5	0.058	3532.5	0.067	3534.1	0.061	3533.5	0.066	3534.9
0.062	3535.7	0.058	3535.1	0.058	3533.8	0.067	3535.4	0.061	3535.4	0.066	3535.7
0.062	3537.2	0.058	3536.6	0.058	3535.2	0.067	3536.9	0.061	3536.3	0.066	3537.2
0.062	3539.2	0.058	3538.6	0.058	3538.1	0.067	3538.5	0.061	3537.6	0.066	3538.9
0.062	3541.0	0.058	3540.6	0.058	3540.7	0.067	3540.4	0.061	3539.3	0.066	3540.2
0.062	3542.9	0.058	3542.4	0.058	3541.9	0.067	3542.5	0.061	3540.6	0.066	3541.7
0.062	3544.5	0.058	3543.9	0.058	3543.0	0.067	3544.2	0.061	3542.2	0.066	3543.3
0.062	3546.2	0.058	3545.7	0.058	3544.7	0.067	3545.5	0.062	3543.8	0.066	3545.2
0.062	3547.8	0.058	3547.2	0.059	3546.0	0.068	3547.3	0.062	3545.6	0.066	3547.1
0.062	3549.1	0.058	3548.4	0.059	3547.5	0.068	3548.7	0.062	3547.7	0.066	3548.6
0.062	3550.3	0.058	3549.6	0.059	3549.1	0.068	3549.9	0.062	3549.4	0.066	3550.4
0.062	3551.8	0.058	3551.3	0.059	3550.9	0.068	3551.3	0.062	3550.8	0.066	3552.0
0.062	3554.6	0.058	3554.3	0.059	3552.8	0.068	3554.3	0.062	3552.8	0.066	3553.3
0.062	3557.1	0.058	3556.5	0.059	3554.7	0.068	3556.8	0.062	3554.3	0.066	3554.6
0.062	3558.5	0.058	3557.7	0.059	3556.1	0.068	3557.9	0.062	3555.5	0.066	3556.1
0.062	3559.6	0.058	3559.1	0.059	3557.9	0.068	3559.2	0.062	3556.6	0.066	3559.0
0.062	3561.2	0.058	3560.6	0.059	3559.5	0.068	3560.9	0.062	3558.5	0.066	3561.5
0.062	3562.5	0.058	3562.0	0.059	3560.7	0.068	3562.1	0.062	3561.5	0.066	3562.7
0.062	3564.2	0.058	3563.5	0.059	3561.9	0.068	3563.7	0.062	3563.7	0.066	3563.8
0.062	3565.5	0.058	3565.1	0.059	3563.8	0.068	3565.1	0.062	3564.9	0.066	3565.5
0.062	3567.5	0.058	3567.0	0.059	3566.9	0.068	3567.0	0.062	3566.2	0.066	3566.8
0.062	3569.4	0.058	3568.9	0.059	3569.0	0.068	3568.9	0.062	3567.7	0.066	3568.2
0.062	3571.3	0.058	3570.7	0.059	3569.8	0.068	3570.6	0.062	3569.1	0.066	3569.7
0.062	3572.6	0.058	3572.0	0.059	3571.2	0.068	3572.2	0.062	3570.7	0.066	3571.8
0.062	3574.5	0.058	3573.9	0.059	3572.9	0.068	3574.0	0.062	3572.1	0.066	3573.7
0.062	3576.1	0.058	3575.5	0.059	3574.3	0.068	3575.4	0.062	3574.0	0.066	3575.5
0.062	3577.4	0.058	3576.7	0.059	3575.8	0.068	3576.6	0.062	3576.0	0.066	3577.1

0.062	3578.5	0.058	3577.8	0.059	3577.5	0.068	3578.1	0.062	3577.8	0.066	3578.8
0.062	3580.0	0.059	3579.6	0.059	3579.4	0.068	3581.0	0.062	3579.2	0.066	3580.2
0.062	3582.5	0.059	3582.7	0.059	3581.3	0.068	3583.6	0.062	3581.0	0.066	3581.4
0.062	3585.5	0.059	3585.1	0.059	3582.9	0.068	3584.7	0.062	3582.6	0.066	3582.7
0.062	3587.0	0.059	3586.1	0.059	3584.6	0.068	3585.9	0.062	3584.0	0.066	3585.3
0.062	3588.0	0.059	3587.4	0.059	3586.3	0.068	3587.5	0.062	3585.3	0.066	3588.1
0.062	3589.5	0.059	3589.0	0.059	3587.6	0.068	3588.7	0.062	3586.5	0.067	3589.5
0.062	3590.9	0.059	3590.3	0.059	3588.9	0.068	3590.3	0.062	3589.1	0.067	3590.5
0.062	3592.4	0.059	3591.9	0.059	3590.1	0.068	3591.9	0.062	3592.0	0.067	3592.4
0.063	3593.8	0.059	3593.4	0.059	3592.7	0.068	3593.8	0.062	3593.6	0.067	3593.6
0.063	3595.7	0.059	3595.3	0.059	3595.8	0.068	3595.7	0.062	3594.4	0.067	3595.1
0.063	3597.5	0.059	3597.2	0.059	3597.1	0.068	3597.5	0.062	3596.2	0.067	3596.6
0.063	3599.5	0.059	3599.1	0.059	3598.0	0.068	3599.0	0.062	3597.6	0.067	3598.5
0.063	3601.0	0.059	3600.5	0.059	3599.6	0.068	3600.8	0.062	3599.0	0.067	3600.4
0.063	3602.7	0.059	3602.2	0.059	3600.9	0.068	3602.0	0.062	3600.6	0.067	3602.2
0.063	3604.4	0.059	3603.9	0.059	3602.5	0.068	3603.2	0.062	3602.1	0.067	3603.7
0.063	3605.9	0.059	3605.1	0.060	3603.9	0.069	3604.8	0.062	3604.1	0.067	3605.4
0.063	3607.1	0.059	3606.3	0.060	3605.8	0.069	3607.7	0.063	3605.9	0.067	3606.8
0.063	3608.3	0.059	3608.2	0.060	3607.8	0.069	3610.2	0.063	3607.7	0.067	3608.0
0.063	3610.7	0.059	3611.2	0.060	3609.6	0.069	3611.1	0.063	3609.3	0.067	3609.3
0.063	3613.8	0.059	3613.5	0.060	3611.3	0.069	3612.5	0.063	3611.0	0.067	3611.8
0.063	3615.4	0.059	3614.5	0.060	3613.0	0.069	3614.1	0.063	3612.4	0.067	3614.8
0.063	3616.2	0.059	3615.7	0.060	3614.6	0.069	3615.5	0.063	3613.7	0.067	3616.3
0.063	3617.9	0.059	3617.2	0.060	3615.8	0.069	3617.0	0.063	3615.0	0.067	3617.2
0.063	3619.3	0.059	3618.6	0.060	3617.0	0.069	3618.6	0.063	3617.2	0.067	3619.0
0.063	3620.7	0.059	3620.1	0.060	3618.6	0.069	3620.5	0.063	3620.2	0.067	3620.2
0.063	3622.3	0.059	3621.7	0.060	3621.7	0.069	3622.4	0.063	3622.0	0.067	3621.7
0.063	3624.0	0.059	3623.8	0.060	3623.9	0.069	3624.1	0.063	3622.8	0.067	3623.2
0.063	3625.9	0.059	3625.7	0.060	3625.0	0.069	3625.5	0.063	3624.4	0.067	3625.0
0.063	3627.9	0.059	3627.3	0.060	3626.3	0.069	3627.2	0.063	3626.1	0.067	3626.9
0.063	3629.5	0.059	3628.7	0.060	3627.9	0.069	3628.6	0.063	3627.4	0.067	3628.8
0.063	3630.9	0.059	3630.7	0.060	3629.3	0.069	3629.8	0.063	3629.0	0.067	3630.3
0.063	3633.0	0.059	3632.2	0.060	3630.8	0.069	3631.5	0.063	3630.4	0.067	3632.1
0.063	3634.3	0.059	3633.5	0.060	3632.4	0.069	3634.4	0.063	3632.3	0.067	3633.5
0.063	3635.5	0.059	3634.7	0.060	3634.4	0.069	3636.9	0.063	3634.2	0.067	3634.8
0.063	3636.7	0.059	3636.6	0.060	3636.3	0.069	3637.7	0.063	3636.2	0.067	3636.0
0.063	3638.8	0.059	3639.5	0.060	3638.0	0.069	3639.2	0.063	3637.7	0.067	3638.4
0.063	3642.0	0.060	3641.7	0.060	3639.5	0.069	3640.8	0.063	3639.4	0.067	3641.7
0.063	3643.8	0.060	3642.8	0.060	3641.3	0.069	3642.1	0.063	3640.9	0.067	3643.0
0.063	3644.6	0.060	3643.9	0.060	3642.7	0.069	3643.6	0.063	3642.2	0.067	3644.0
0.063	3646.1	0.060	3645.5	0.060	3644.0	0.069	3645.2	0.063	3643.4	0.068	3645.7
0.063	3647.7	0.060	3646.9	0.060	3645.0	0.069	3647.1	0.063	3645.2	0.068	3646.9
0.063	3649.1	0.060	3648.5	0.060	3647.1	0.069	3649.0	0.063	3647.9	0.068	3648.3
0.063	3650.7	0.060	3650.1	0.060	3650.4	0.069	3650.7	0.063	3650.3	0.068	3649.8
0.063	3652.2	0.060	3652.0	0.060	3652.3	0.069	3652.3	0.063	3651.4	0.068	3651.7
0.064	3654.3	0.060	3653.9	0.060	3653.1	0.069	3654.1	0.063	3652.8	0.068	3653.6
0.064	3656.1	0.060	3655.7	0.060	3654.6	0.069	3655.3	0.063	3654.6	0.068	3655.5
0.064	3657.9	0.060	3657.0	0.060	3656.2	0.069	3656.6	0.063	3655.9	0.068	3656.9
0.064	3659.3	0.060	3658.9	0.060	3657.6	0.069	3658.1	0.063	3657.3	0.068	3658.8
0.064	3661.2	0.060	3660.4	0.060	3659.1	0.070	3661.1	0.063	3658.8	0.068	3660.4
0.064	3662.7	0.060	3661.8	0.060	3660.8	0.070	3663.6	0.063	3660.7	0.068	3661.5
0.064	3663.8	0.060	3663.0	0.060	3662.7	0.070	3664.5	0.063	3662.6	0.068	3662.7
0.064	3665.1	0.060	3664.7	0.061	3664.5	0.070	3665.8	0.063	3664.3	0.068	3664.7
0.064	3667.1	0.060	3667.8	0.061	3666.3	0.070	3667.4	0.063	3665.8	0.068	3667.8
0.064	3670.4	0.060	3670.1	0.061	3667.9	0.070	3668.8	0.064	3667.6	0.068	3669.8
0.064	3672.2	0.060	3671.0	0.061	3669.5	0.070	3670.3	0.064	3669.2	0.068	3670.5
0.064	3673.1	0.060	3672.4	0.061	3671.0	0.070	3671.8	0.064	3670.5	0.068	3672.2

0.064	3674.5	0.060	3673.9	0.061	3672.3	0.070	3673.7	0.064	3671.8	0.068	3673.7
0.064	3676.1	0.060	3675.3	0.061	3673.5	0.070	3675.8	0.064	3673.3	0.068	3675.1
0.064	3677.5	0.060	3676.9	0.061	3675.9	0.070	3677.3	0.064	3675.8	0.068	3676.6
0.064	3679.1	0.060	3678.3	0.061	3678.9	0.070	3679.1	0.064	3678.6	0.068	3678.2
0.064	3680.4	0.060	3680.2	0.061	3680.8	0.070	3680.7	0.064	3680.2	0.068	3680.2
0.064	3682.4	0.060	3682.2	0.061	3681.4	0.070	3682.0	0.064	3681.1	0.068	3682.2
0.064	3684.3	0.060	3683.9	0.061	3682.9	0.070	3683.3	0.064	3682.8	0.068	3683.9
0.064	3686.1	0.060	3685.3	0.061	3684.4	0.070	3684.6	0.064	3684.3	0.068	3685.2
0.064	3687.6	0.060	3687.3	0.061	3685.8	0.070	3687.6	0.064	3685.7	0.068	3687.0
0.064	3689.4	0.060	3689.0	0.061	3687.4	0.070	3690.3	0.064	3687.1	0.068	3688.3
0.064	3691.1	0.060	3690.1	0.061	3689.3	0.070	3691.3	0.064	3688.7	0.068	3689.6
0.064	3692.3	0.060	3691.5	0.061	3691.2	0.070	3692.4	0.064	3690.7	0.068	3691.1
0.064	3693.6	0.060	3693.0	0.061	3692.9	0.070	3694.1	0.064	3692.5	0.068	3694.0
0.064	3695.1	0.060	3695.9	0.061	3694.5	0.070	3695.5	0.064	3694.3	0.068	3696.5
0.064	3698.1	0.060	3698.3	0.061	3696.2	0.070	3697.0	0.064	3695.9	0.068	3697.6
0.064	3700.6	0.060	3699.5	0.061	3698.0	0.070	3698.5	0.064	3697.7	0.068	3698.9
0.064	3701.7	0.060	3700.6	0.061	3699.2	0.070	3700.5	0.064	3699.1	0.068	3700.7
0.064	3702.8	0.061	3702.3	0.061	3700.5	0.070	3702.5	0.064	3700.4	0.068	3701.8
0.064	3704.5	0.061	3703.6	0.061	3701.8	0.070	3704.1	0.064	3701.7	0.069	3703.4
0.064	3705.8	0.061	3705.2	0.061	3704.6	0.070	3705.5	0.064	3703.7	0.069	3704.9
0.064	3707.4	0.061	3706.7	0.061	3707.4	0.070	3707.3	0.064	3706.8	0.069	3706.9
0.064	3708.9	0.061	3708.5	0.061	3708.8	0.070	3708.6	0.064	3708.8	0.069	3708.9
0.064	3710.6	0.061	3710.6	0.061	3709.7	0.070	3710.0	0.064	3709.4	0.069	3710.5
0.064	3712.7	0.061	3712.4	0.061	3711.3	0.070	3711.3	0.064	3711.1	0.069	3711.9
0.064	3714.6	0.061	3713.7	0.061	3712.6	0.070	3714.2	0.064	3712.7	0.069	3713.6
0.065	3716.0	0.061	3715.7	0.061	3714.2	0.070	3716.8	0.064	3714.0	0.069	3715.2
0.065	3717.8	0.061	3717.3	0.061	3715.7	0.070	3718.0	0.064	3715.5	0.069	3716.4
0.065	3719.5	0.061	3718.5	0.061	3717.5	0.071	3719.2	0.064	3717.1	0.069	3717.6
0.065	3720.7	0.061	3719.7	0.061	3719.6	0.071	3720.8	0.064	3719.1	0.069	3720.4
0.065	3722.0	0.061	3721.4	0.061	3721.4	0.071	3722.1	0.064	3720.9	0.069	3723.3
0.065	3723.4	0.061	3724.3	0.062	3722.8	0.071	3723.7	0.064	3722.8	0.069	3724.6
0.065	3726.2	0.061	3726.7	0.062	3724.6	0.071	3725.3	0.064	3724.1	0.069	3725.5
0.065	3728.9	0.061	3727.9	0.062	3726.1	0.071	3727.1	0.064	3726.0	0.069	3727.2
0.065	3730.3	0.061	3729.0	0.062	3727.5	0.071	3729.0	0.064	3727.7	0.069	3728.4
0.065	3731.3	0.061	3730.6	0.062	3728.7	0.071	3730.7	0.065	3728.9	0.069	3730.0
0.065	3732.8	0.061	3732.1	0.062	3730.4	0.071	3732.3	0.065	3730.1	0.069	3731.5
0.065	3734.3	0.061	3733.6	0.062	3733.4	0.071	3734.1	0.065	3731.8	0.069	3733.4
0.065	3735.9	0.061	3735.1	0.062	3735.7	0.071	3735.3	0.065	3734.8	0.069	3735.4
0.065	3737.2	0.061	3736.9	0.062	3736.7	0.071	3736.5	0.065	3737.0	0.069	3737.2
0.065	3739.0	0.061	3738.9	0.062	3738.0	0.071	3738.1	0.065	3738.1	0.069	3738.7
0.065	3741.1	0.061	3740.7	0.062	3739.6	0.071	3741.0	0.065	3739.4	0.069	3740.4
0.065	3742.9	0.061	3742.1	0.062	3741.0	0.071	3743.5	0.065	3741.2	0.069	3741.9
0.065	3744.3	0.061	3743.9	0.062	3742.5	0.071	3744.7	0.065	3742.4	0.069	3743.1
0.065	3746.1	0.061	3745.5	0.062	3743.9	0.071	3745.7	0.065	3744.1	0.069	3744.3
0.065	3747.8	0.061	3746.8	0.062	3745.9	0.071	3747.3	0.065	3745.4	0.069	3746.6
0.065	3749.0	0.061	3748.2	0.062	3747.8	0.071	3748.6	0.065	3747.2	0.069	3749.8
0.065	3750.4	0.061	3749.5	0.062	3749.6	0.071	3750.2	0.065	3749.2	0.069	3751.2
0.065	3751.6	0.061	3752.3	0.062	3751.0	0.071	3751.8	0.065	3751.2	0.069	3752.1
0.065	3754.1	0.061	3755.1	0.062	3752.9	0.071	3753.8	0.065	3752.8	0.069	3753.9
0.065	3757.2	0.061	3756.4	0.062	3754.4	0.071	3755.7	0.065	3754.2	0.069	3755.2
0.065	3758.8	0.061	3757.4	0.062	3755.7	0.071	3757.5	0.065	3755.9	0.069	3756.8
0.065	3759.6	0.061	3759.1	0.062	3757.0	0.071	3759.1	0.065	3757.3	0.069	3758.4
0.065	3761.2	0.061	3760.4	0.062	3758.8	0.071	3760.7	0.065	3758.6	0.069	3760.0
0.065	3762.7	0.062	3762.0	0.062	3761.8	0.071	3762.2	0.065	3759.9	0.070	3762.0
0.065	3764.1	0.062	3763.5	0.062	3764.0	0.071	3763.3	0.065	3762.3	0.070	3763.8
0.065	3765.7	0.062	3765.1	0.062	3765.0	0.071	3764.5	0.065	3765.4	0.070	3765.2
0.065	3767.2	0.062	3767.0	0.062	3766.2	0.071	3767.0	0.065	3767.0	0.070	3767.0

0.065	3769.2	0.062	3768.9	0.062	3767.9	0.071	3770.1	0.065	3767.8	0.070	3768.5
0.065	3771.0	0.062	3770.5	0.062	3769.2	0.071	3771.5	0.065	3769.5	0.070	3769.8
0.065	3772.8	0.062	3772.3	0.062	3770.7	0.071	3772.5	0.065	3771.0	0.070	3771.0
0.065	3774.4	0.062	3773.9	0.062	3772.4	0.071	3774.2	0.065	3772.3	0.070	3773.0
0.065	3776.2	0.062	3775.3	0.062	3774.3	0.072	3775.4	0.065	3774.0	0.070	3776.2
0.066	3777.6	0.062	3776.6	0.062	3776.2	0.072	3777.0	0.065	3775.4	0.070	3778.1
0.066	3778.8	0.062	3777.8	0.062	3778.0	0.072	3778.6	0.065	3777.3	0.070	3778.9
0.066	3780.1	0.062	3780.2	0.062	3779.6	0.072	3780.6	0.065	3779.2	0.070	3780.6
0.066	3782.2	0.062	3783.2	0.062	3781.5	0.072	3782.5	0.065	3781.0	0.070	3782.1
0.066	3785.3	0.062	3784.8	0.062	3782.8	0.072	3784.1	0.065	3782.3	0.070	3783.4
0.066	3787.1	0.062	3785.7	0.063	3784.0	0.072	3785.7	0.065	3784.2	0.070	3784.9
0.066	3787.9	0.062	3787.2	0.063	3785.1	0.072	3787.4	0.065	3785.8	0.070	3786.7
0.066	3789.4	0.062	3788.9	0.063	3787.2	0.072	3788.9	0.065	3787.1	0.070	3788.5
0.066	3791.2	0.062	3790.3	0.063	3790.4	0.072	3790.0	0.065	3788.4	0.070	3790.4
0.066	3792.5	0.062	3791.8	0.063	3792.3	0.072	3791.3	0.066	3790.2	0.070	3792.0
0.066	3794.0	0.062	3793.3	0.063	3793.1	0.072	3794.0	0.066	3793.4	0.070	3793.8
0.066	3795.5	0.062	3795.4	0.063	3794.7	0.072	3797.0	0.066	3795.4	0.070	3795.4
0.066	3797.4	0.062	3797.3	0.063	3796.2	0.072	3798.2	0.066	3796.4	0.070	3796.7
0.066	3799.4	0.062	3799.1	0.063	3797.6	0.072	3799.3	0.066	3797.7	0.070	3797.9
0.066	3801.1	0.062	3800.7	0.063	3799.5	0.072	3800.9	0.066	3799.5	0.070	3799.5
0.066	3802.6	0.062	3802.4	0.063	3800.3	0.072	3802.1	0.066	3800.6	0.070	3802.6
0.066	3804.6	0.062	3803.8	0.063	3802.8	0.072	3803.7	0.066	3802.2	0.070	3805.0
0.066	3806.1	0.062	3805.1	0.063	3804.7	0.072	3805.2	0.066	3803.8	0.070	3805.9
0.066	3807.3	0.062	3806.3	0.063	3806.2	0.072	3807.2	0.066	3805.6	0.070	3807.2
0.066	3808.6	0.062	3808.2	0.063	3808.0	0.072	3809.0	0.066	3807.5	0.070	3808.9
0.066	3810.2	0.062	3811.2	0.063	3809.3	0.072	3810.8	0.066	3809.4	0.070	3810.1
0.066	3813.0	0.062	3813.3	0.063	3810.7	0.072	3812.4	0.066	3810.9	0.070	3811.7
0.066	3815.5	0.062	3814.1	0.063	3811.7	0.072	3814.1	0.066	3812.7	0.070	3813.2
0.066	3816.5	0.062	3815.7	0.063	3813.9	0.072	3815.5	0.066	3814.3	0.070	3815.2
0.066	3818.0	0.062	3817.4	0.063	3817.1	0.072	3816.7	0.066	3815.5	0.070	3817.2
0.066	3819.6	0.062	3818.8	0.063	3819.0	0.072	3818.1	0.066	3816.8	0.071	3818.7
0.066	3821.0	0.062	3820.2	0.063	3819.7	0.072	3820.6	0.066	3818.3	0.071	3820.5
0.066	3822.5	0.062	3821.8	0.063	3821.4	0.072	3823.5	0.066	3820.8	0.071	3822.2
0.066	3823.8	0.063	3823.8	0.063	3822.9	0.072	3824.9	0.066	3823.6	0.071	3823.5
0.066	3825.7	0.063	3825.6	0.063	3824.3	0.072	3825.9	0.066	3825.2	0.071	3824.7
0.066	3827.6	0.063	3827.3	0.063	3825.9	0.072	3827.5	0.066	3826.0	0.071	3826.0
0.066	3829.5	0.063	3828.7	0.063	3827.4	0.072	3828.7	0.066	3827.8	0.071	3828.9
0.066	3831.0	0.063	3830.6	0.063	3829.4	0.072	3830.2	0.066	3829.1	0.071	3831.4
0.066	3832.7	0.063	3832.0	0.063	3831.2	0.073	3831.7	0.066	3830.7	0.071	3832.9
0.066	3834.4	0.063	3833.3	0.063	3832.8	0.073	3833.9	0.066	3832.3	0.071	3833.8
0.066	3835.7	0.063	3834.6	0.063	3834.6	0.073	3835.8	0.066	3833.9	0.071	3835.6
0.066	3837.0	0.063	3836.6	0.063	3836.3	0.073	3837.5	0.066	3835.8	0.071	3836.9
0.067	3838.4	0.063	3839.7	0.063	3837.7	0.073	3838.8	0.066	3837.7	0.071	3838.3
0.067	3841.1	0.063	3841.8	0.063	3838.9	0.073	3840.7	0.066	3839.4	0.071	3839.9
0.067	3844.0	0.063	3842.6	0.063	3840.1	0.073	3842.2	0.066	3840.8	0.071	3841.8
0.067	3845.3	0.063	3844.1	0.064	3842.5	0.073	3843.5	0.066	3842.5	0.071	3843.8
0.067	3846.3	0.063	3845.8	0.064	3845.6	0.073	3844.6	0.066	3844.0	0.071	3845.4
0.067	3848.0	0.063	3847.1	0.064	3847.2	0.073	3847.0	0.066	3845.3	0.071	3846.9
0.067	3849.3	0.063	3848.5	0.064	3848.0	0.073	3850.0	0.066	3846.4	0.071	3848.7
0.067	3850.7	0.063	3850.0	0.064	3849.6	0.073	3851.7	0.066	3848.8	0.071	3850.1
0.067	3852.2	0.063	3851.9	0.064	3851.1	0.073	3852.5	0.066	3851.9	0.071	3851.4
0.067	3853.9	0.063	3853.8	0.064	3852.5	0.073	3854.0	0.067	3853.6	0.071	3852.6
0.067	3855.9	0.063	3855.7	0.064	3854.1	0.073	3855.4	0.067	3854.5	0.071	3855.0
0.067	3857.8	0.063	3857.1	0.064	3855.7	0.073	3856.9	0.067	3856.3	0.071	3858.0
0.067	3859.5	0.063	3859.0	0.064	3857.7	0.073	3858.4	0.067	3857.7	0.071	3859.7
0.067	3861.1	0.063	3860.5	0.064	3859.6	0.073	3860.3	0.067	3859.1	0.071	3860.5
0.067	3862.6	0.063	3861.7	0.064	3861.2	0.073	3862.3	0.067	3860.5	0.071	3862.2

0.067	3864.1	0.063	3863.1	0.064	3862.9	0.073	3864.1	0.067	3862.2	0.071	3863.6
0.067	3865.4	0.063	3864.8	0.064	3864.7	0.073	3865.5	0.067	3864.0	0.071	3865.1
0.067	3866.6	0.063	3867.9	0.064	3866.0	0.073	3867.3	0.067	3866.0	0.071	3866.6
0.067	3869.4	0.063	3870.1	0.064	3867.3	0.073	3869.0	0.067	3867.7	0.071	3868.2
0.067	3872.3	0.063	3870.9	0.064	3868.4	0.073	3870.2	0.067	3869.2	0.071	3870.3
0.067	3873.8	0.063	3872.4	0.064	3870.8	0.073	3871.4	0.067	3871.0	0.071	3872.2
0.067	3874.7	0.063	3874.0	0.064	3873.7	0.073	3873.3	0.067	3872.5	0.071	3873.5
0.067	3876.2	0.063	3875.3	0.064	3875.5	0.073	3876.7	0.067	3873.8	0.071	3875.5
0.067	3877.6	0.063	3876.8	0.064	3876.3	0.073	3878.5	0.067	3875.0	0.072	3877.1
0.067	3879.1	0.063	3878.4	0.064	3878.1	0.073	3879.3	0.067	3876.9	0.072	3878.3
0.067	3880.6	0.063	3880.2	0.064	3879.7	0.073	3880.8	0.067	3879.7	0.072	3879.4
0.067	3882.3	0.063	3882.1	0.064	3881.1	0.073	3882.3	0.067	3882.1	0.072	3881.4
0.067	3884.3	0.064	3884.0	0.064	3882.4	0.073	3883.8	0.067	3883.3	0.072	3884.4
0.067	3886.1	0.064	3885.4	0.064	3884.2	0.073	3885.2	0.067	3884.4	0.072	3886.5
0.067	3887.9	0.064	3887.3	0.064	3886.1	0.073	3886.9	0.067	3886.1	0.072	3887.5
0.067	3889.3	0.064	3889.0	0.064	3888.0	0.073	3889.0	0.067	3887.4	0.072	3888.8
0.067	3891.2	0.064	3890.1	0.064	3889.7	0.074	3890.8	0.067	3888.9	0.072	3890.4
0.067	3892.6	0.064	3891.4	0.064	3891.2	0.074	3892.2	0.067	3890.4	0.072	3891.7
0.067	3893.8	0.064	3892.8	0.064	3892.8	0.074	3894.0	0.067	3892.2	0.072	3893.2
0.067	3895.0	0.064	3895.8	0.064	3894.2	0.074	3895.8	0.067	3894.2	0.072	3895.0
0.067	3897.2	0.064	3898.3	0.064	3895.5	0.074	3897.1	0.067	3896.1	0.072	3896.9
0.068	3900.2	0.064	3899.6	0.064	3896.8	0.074	3898.3	0.067	3897.5	0.072	3898.8
0.068	3902.1	0.064	3900.7	0.064	3899.1	0.074	3899.9	0.067	3899.4	0.072	3900.5
0.068	3902.8	0.064	3902.5	0.064	3902.2	0.074	3902.9	0.067	3900.9	0.072	3902.1
0.068	3904.5	0.064	3903.8	0.065	3904.0	0.074	3905.2	0.067	3902.4	0.072	3903.9
0.068	3906.2	0.064	3905.4	0.065	3904.7	0.074	3906.1	0.067	3903.7	0.072	3905.1
0.068	3907.5	0.064	3906.8	0.065	3906.4	0.074	3907.4	0.067	3904.9	0.072	3906.3
0.068	3909.0	0.064	3908.5	0.065	3907.9	0.074	3909.0	0.067	3907.2	0.072	3907.5
0.068	3910.5	0.064	3910.5	0.065	3909.3	0.074	3910.4	0.067	3910.2	0.072	3910.3
0.068	3912.5	0.064	3912.4	0.065	3910.7	0.074	3911.8	0.067	3911.9	0.072	3913.2
0.068	3914.6	0.064	3914.0	0.065	3912.4	0.074	3913.5	0.067	3912.9	0.072	3914.5
0.068	3916.2	0.064	3915.4	0.065	3914.4	0.074	3915.5	0.068	3914.4	0.072	3915.6
0.068	3917.6	0.064	3917.2	0.065	3916.3	0.074	3917.4	0.068	3916.0	0.072	3917.2
0.068	3919.3	0.064	3918.6	0.065	3918.0	0.074	3919.0	0.068	3917.4	0.072	3918.6
0.068	3921.0	0.064	3919.9	0.065	3919.5	0.074	3920.8	0.068	3918.9	0.072	3920.1
0.068	3922.2	0.064	3921.3	0.065	3921.2	0.074	3922.4	0.068	3920.5	0.072	3921.7
0.068	3923.5	0.064	3923.9	0.065	3922.6	0.074	3923.7	0.068	3922.5	0.072	3923.6
0.068	3925.2	0.064	3926.6	0.065	3923.8	0.074	3924.8	0.068	3924.4	0.072	3925.5
0.068	3928.5	0.064	3928.1	0.065	3925.1	0.074	3926.4	0.068	3926.1	0.072	3927.2
0.068	3930.5	0.064	3929.1	0.065	3927.7	0.074	3929.4	0.068	3927.5	0.072	3928.6
0.068	3931.5	0.064	3930.9	0.065	3930.7	0.074	3931.8	0.068	3929.4	0.072	3930.5
0.068	3932.9	0.064	3932.2	0.065	3932.2	0.074	3932.9	0.068	3930.9	0.072	3931.9
0.068	3934.6	0.064	3933.7	0.065	3933.0	0.074	3934.3	0.068	3932.1	0.072	3933.1
0.068	3936.0	0.064	3935.3	0.065	3934.7	0.074	3935.7	0.068	3933.5	0.073	3934.2
0.068	3937.5	0.064	3936.9	0.065	3936.1	0.074	3937.2	0.068	3935.2	0.073	3936.8
0.068	3939.0	0.064	3938.7	0.065	3937.5	0.074	3938.6	0.068	3938.0	0.073	3939.9
0.068	3940.6	0.064	3940.7	0.065	3939.0	0.074	3940.2	0.068	3940.4	0.073	3941.4
0.068	3942.6	0.064	3942.3	0.065	3940.8	0.074	3942.1	0.068	3941.6	0.073	3942.3
0.068	3944.5	0.064	3943.8	0.065	3942.7	0.074	3944.1	0.068	3942.8	0.073	3943.9
0.068	3946.1	0.065	3945.5	0.065	3944.6	0.074	3945.7	0.068	3944.5	0.073	3945.3
0.068	3947.8	0.065	3947.0	0.065	3946.3	0.074	3947.2	0.068	3945.8	0.073	3946.8
0.068	3949.3	0.065	3948.3	0.065	3947.9	0.075	3949.1	0.068	3947.4	0.073	3948.2
0.068	3950.7	0.065	3949.5	0.065	3949.6	0.075	3950.4	0.068	3948.9	0.073	3950.0
0.068	3952.0	0.065	3951.9	0.065	3951.0	0.075	3951.7	0.068	3950.5	0.073	3951.9
0.068	3953.4	0.065	3955.1	0.065	3952.1	0.075	3952.8	0.068	3952.5	0.073	3953.8
0.068	3956.5	0.065	3956.6	0.065	3953.5	0.075	3955.3	0.068	3954.4	0.073	3955.2
0.068	3959.0	0.065	3957.3	0.065	3956.0	0.075	3958.3	0.068	3955.9	0.073	3956.9

0.068	3960.2	0.065	3958.9	0.065	3958.9	0.075	3960.0	0.068	3957.7	0.073	3958.7
0.069	3961.2	0.065	3960.4	0.065	3960.4	0.075	3960.8	0.068	3959.4	0.073	3959.9
0.069	3962.9	0.065	3961.8	0.065	3961.3	0.075	3962.6	0.068	3960.6	0.073	3961.1
0.069	3964.1	0.065	3963.5	0.066	3963.1	0.075	3963.9	0.068	3962.0	0.073	3963.0
0.069	3965.7	0.065	3965.0	0.066	3964.5	0.075	3965.3	0.068	3963.3	0.073	3966.1
0.069	3967.2	0.065	3967.0	0.066	3965.9	0.075	3967.0	0.068	3965.8	0.073	3968.2
0.069	3969.1	0.065	3969.0	0.066	3967.4	0.075	3968.5	0.068	3968.8	0.073	3969.2
0.069	3971.1	0.065	3970.7	0.066	3969.1	0.075	3970.5	0.068	3970.2	0.073	3970.4
0.069	3972.9	0.065	3972.1	0.066	3971.0	0.075	3972.4	0.068	3971.0	0.073	3972.0
0.069	3974.3	0.065	3973.9	0.066	3973.0	0.075	3973.9	0.068	3972.6	0.073	3973.4
0.069	3976.2	0.065	3975.3	0.066	3974.5	0.075	3975.7	0.068	3974.1	0.073	3974.9
0.069	3977.8	0.065	3976.6	0.066	3976.0	0.075	3977.4	0.068	3975.5	0.073	3976.4
0.069	3979.0	0.065	3977.8	0.066	3977.8	0.075	3978.6	0.069	3977.1	0.073	3978.6
0.069	3980.1	0.065	3979.8	0.066	3979.2	0.075	3979.8	0.069	3978.9	0.073	3980.5
0.069	3981.8	0.065	3982.9	0.066	3980.6	0.075	3981.7	0.069	3980.8	0.073	3982.1
0.069	3984.4	0.065	3984.9	0.066	3981.8	0.075	3984.7	0.069	3982.6	0.073	3983.6
0.069	3987.2	0.065	3985.9	0.066	3984.1	0.075	3987.0	0.069	3984.5	0.073	3985.5
0.069	3988.5	0.065	3987.4	0.066	3987.3	0.075	3987.6	0.069	3985.9	0.073	3986.8
0.069	3989.5	0.065	3988.8	0.066	3988.9	0.075	3989.2	0.069	3987.7	0.073	3988.1
0.069	3991.1	0.065	3990.3	0.066	3989.7	0.075	3990.8	0.069	3989.1	0.073	3989.3
0.069	3992.6	0.065	3991.9	0.066	3991.4	0.075	3992.1	0.069	3990.4	0.073	3991.7
0.069	3994.1	0.065	3993.6	0.066	3992.9	0.075	3993.6	0.069	3991.6	0.074	3994.8
0.069	3995.7	0.065	3995.3	0.066	3994.2	0.075	3995.1	0.069	3993.5	0.074	3996.4
0.069	3997.3	0.065	3997.3	0.066	3995.9	0.075	3997.2	0.069	3996.4	0.074	3997.1
0.069	3999.3	0.065	3999.0	0.066	3997.5	0.075	3999.2	0.069	3998.6	0.074	3998.8
0.069	4001.2	0.065	4000.4	0.066	3999.3	0.075	4000.8	0.069	3999.7	0.074	4000.3
0.069	4002.7	0.065	4002.2	0.066	4001.2	0.075	4002.5	0.069	4001.1	0.074	4001.8
0.069	4004.3	0.065	4003.7	0.066	4002.9	0.075	4004.1	0.069	4002.7	0.074	4003.2
0.069	4005.9	0.065	4005.1	0.066	4004.4	0.075	4005.3	0.069	4004.0	0.074	4005.0
0.069	4007.3	0.066	4006.5	0.066	4006.3	0.076	4006.6	0.069	4005.5	0.074	4007.0
0.069	4008.6	0.066	4008.0	0.066	4007.7	0.076	4008.1	0.069	4007.1	0.074	4009.0
0.069	4009.9	0.066	4010.8	0.066	4008.9	0.076	4011.0	0.069	4009.1	0.074	4010.3
0.069	4012.4	0.066	4013.3	0.066	4010.1	0.076	4013.4	0.069	4010.9	0.074	4012.0
0.069	4015.4	0.066	4014.7	0.066	4012.6	0.076	4014.4	0.069	4012.7	0.074	4013.6
0.069	4017.1	0.066	4015.7	0.066	4015.8	0.076	4015.9	0.069	4014.0	0.074	4015.0
0.069	4017.9	0.066	4017.5	0.066	4017.3	0.076	4017.6	0.069	4015.9	0.074	4016.2
0.069	4019.7	0.066	4018.8	0.066	4018.1	0.076	4018.8	0.069	4017.6	0.074	4018.0
0.069	4021.1	0.066	4020.3	0.066	4019.7	0.076	4020.2	0.069	4019.0	0.074	4021.1
0.070	4022.5	0.066	4021.7	0.066	4021.1	0.076	4021.8	0.069	4020.2	0.074	4023.3
0.070	4024.0	0.066	4023.6	0.067	4022.5	0.076	4023.8	0.069	4021.5	0.074	4024.1
0.070	4025.6	0.066	4025.5	0.067	4024.2	0.076	4025.6	0.069	4024.1	0.074	4025.5
0.070	4027.6	0.066	4027.3	0.067	4025.9	0.076	4027.5	0.069	4027.1	0.074	4027.1
0.070	4029.6	0.066	4028.9	0.067	4027.8	0.076	4029.0	0.069	4028.6	0.074	4028.4
0.070	4031.2	0.066	4030.5	0.067	4029.7	0.076	4030.6	0.069	4029.5	0.074	4030.0
0.070	4032.6	0.066	4032.3	0.067	4031.3	0.076	4032.0	0.069	4031.1	0.074	4031.4
0.070	4034.4	0.066	4033.6	0.067	4032.9	0.076	4033.3	0.069	4032.6	0.074	4033.5
0.070	4035.8	0.066	4034.9	0.067	4034.5	0.076	4034.6	0.069	4034.0	0.074	4035.4
0.070	4037.1	0.066	4036.3	0.067	4036.0	0.076	4037.3	0.069	4035.6	0.074	4036.9
0.070	4038.3	0.066	4038.9	0.067	4037.1	0.076	4040.2	0.069	4037.2	0.074	4038.8
0.070	4040.6	0.066	4041.8	0.067	4038.4	0.076	4041.6	0.070	4039.0	0.074	4040.6
0.070	4043.8	0.066	4043.2	0.067	4040.8	0.076	4042.5	0.070	4041.0	0.074	4041.8
0.070	4045.5	0.066	4044.0	0.067	4043.8	0.076	4044.3	0.070	4042.8	0.074	4043.2
0.070	4046.3	0.066	4045.7	0.067	4045.5	0.076	4045.4	0.070	4044.3	0.074	4044.4
0.070	4047.8	0.066	4047.1	0.067	4046.3	0.076	4047.1	0.070	4045.9	0.074	4046.9
0.070	4049.4	0.066	4048.6	0.067	4048.0	0.076	4048.4	0.070	4047.5	0.074	4049.9
0.070	4050.8	0.066	4050.0	0.067	4049.4	0.076	4050.3	0.070	4048.9	0.074	4051.2
0.070	4052.2	0.066	4051.8	0.067	4051.0	0.076	4052.1	0.070	4050.0	0.075	4052.1

0.070	4053.8	0.066	4053.8	0.067	4052.6	0.076	4054.1	0.070	4052.0	0.075	4053.8
0.070	4055.9	0.066	4055.7	0.067	4054.0	0.076	4055.6	0.070	4055.1	0.075	4055.2
0.070	4057.9	0.066	4057.1	0.067	4056.0	0.076	4057.4	0.070	4057.0	0.075	4056.6
0.070	4059.5	0.066	4058.9	0.067	4057.9	0.076	4058.9	0.070	4058.1	0.075	4058.2
0.070	4061.0	0.066	4060.6	0.067	4059.6	0.076	4060.1	0.070	4059.4	0.075	4059.9
0.070	4062.8	0.066	4062.0	0.067	4061.0	0.076	4061.4	0.070	4061.0	0.075	4062.0
0.070	4064.3	0.066	4063.3	0.067	4062.8	0.077	4063.5	0.070	4062.3	0.075	4063.9
0.070	4065.5	0.066	4064.6	0.067	4064.4	0.077	4066.7	0.070	4063.9	0.075	4065.2
0.070	4066.8	0.067	4066.9	0.067	4065.5	0.077	4068.5	0.070	4065.4	0.075	4067.2
0.070	4068.8	0.067	4069.8	0.067	4066.7	0.077	4069.2	0.070	4067.5	0.075	4068.7
0.070	4071.9	0.067	4071.5	0.067	4069.1	0.077	4070.8	0.070	4069.3	0.075	4069.9
0.070	4073.9	0.067	4072.3	0.067	4072.2	0.077	4072.3	0.070	4071.1	0.075	4071.0
0.070	4074.6	0.067	4074.0	0.067	4073.8	0.077	4073.7	0.070	4072.3	0.075	4072.9
0.070	4076.2	0.067	4075.5	0.067	4074.7	0.077	4075.2	0.070	4074.3	0.075	4076.0
0.070	4077.8	0.067	4077.0	0.067	4076.4	0.077	4076.8	0.070	4076.1	0.075	4078.2
0.070	4079.3	0.067	4078.4	0.067	4078.0	0.077	4078.7	0.070	4077.2	0.075	4079.1
0.070	4080.7	0.067	4080.1	0.067	4079.4	0.077	4080.7	0.070	4078.5	0.075	4080.5
0.071	4082.3	0.067	4082.1	0.067	4080.7	0.077	4082.5	0.070	4079.9	0.075	4082.1
0.071	4084.3	0.067	4083.9	0.067	4082.5	0.077	4084.0	0.070	4082.5	0.075	4083.5
0.071	4086.2	0.067	4085.6	0.068	4084.4	0.077	4085.8	0.070	4085.4	0.075	4085.0
0.071	4087.9	0.067	4087.0	0.068	4086.3	0.077	4087.0	0.070	4086.9	0.075	4086.6
0.071	4089.2	0.067	4088.8	0.068	4088.0	0.077	4088.2	0.070	4087.7	0.075	4088.5
0.071	4091.0	0.067	4090.4	0.068	4089.5	0.077	4089.7	0.070	4089.3	0.075	4090.5
0.071	4092.6	0.067	4091.7	0.068	4091.3	0.077	4092.6	0.070	4090.9	0.075	4092.2
0.071	4093.8	0.067	4093.0	0.068	4092.8	0.077	4095.2	0.070	4092.3	0.075	4093.7
0.071	4095.2	0.067	4095.0	0.068	4093.9	0.077	4096.1	0.070	4093.8	0.075	4095.4
0.071	4097.0	0.067	4097.9	0.068	4095.1	0.077	4097.6	0.070	4095.4	0.075	4096.8
0.071	4099.8	0.067	4100.0	0.068	4097.4	0.077	4099.2	0.070	4097.6	0.075	4098.0
0.071	4102.3	0.067	4101.0	0.068	4100.6	0.077	4100.5	0.070	4099.3	0.075	4099.3
0.071	4103.3	0.067	4102.2	0.068	4102.4	0.077	4102.0	0.071	4101.0	0.075	4101.8
0.071	4104.6	0.067	4104.0	0.068	4103.1	0.077	4103.3	0.071	4102.4	0.075	4104.9
0.071	4106.1	0.067	4105.3	0.068	4104.6	0.077	4105.4	0.071	4104.2	0.075	4106.4
0.071	4107.6	0.067	4106.9	0.068	4106.2	0.077	4107.4	0.071	4105.8	0.075	4107.1
0.071	4109.1	0.067	4108.4	0.068	4107.6	0.077	4109.2	0.071	4107.1	0.075	4109.0
0.071	4110.5	0.067	4110.3	0.068	4109.2	0.077	4110.6	0.071	4108.4	0.075	4110.3
0.071	4112.3	0.067	4112.2	0.068	4110.7	0.077	4112.4	0.071	4110.2	0.076	4111.7
0.071	4114.3	0.067	4113.9	0.068	4112.7	0.077	4113.9	0.071	4113.2	0.076	4113.3
0.071	4116.0	0.067	4115.4	0.068	4114.7	0.077	4115.1	0.071	4115.4	0.076	4115.0
0.071	4117.6	0.067	4117.2	0.068	4116.2	0.077	4116.3	0.071	4116.5	0.076	4116.9
0.071	4119.3	0.067	4118.9	0.068	4117.9	0.077	4118.7	0.071	4117.8	0.076	4118.8
0.071	4121.1	0.067	4120.2	0.068	4119.6	0.077	4121.8	0.071	4119.3	0.076	4120.2
0.071	4122.4	0.067	4121.3	0.068	4121.1	0.078	4123.4	0.071	4120.6	0.076	4122.1
0.071	4123.5	0.067	4123.2	0.068	4122.3	0.078	4124.1	0.071	4122.3	0.076	4123.7
0.071	4125.2	0.067	4125.9	0.068	4123.6	0.078	4125.9	0.071	4123.7	0.076	4125.0
0.071	4127.8	0.067	4128.4	0.068	4125.7	0.078	4127.2	0.071	4125.5	0.076	4126.2
0.071	4130.6	0.068	4129.5	0.068	4128.8	0.078	4128.7	0.071	4127.6	0.076	4128.1
0.071	4132.0	0.068	4130.6	0.068	4130.7	0.078	4130.4	0.071	4129.4	0.076	4131.2
0.071	4132.8	0.068	4132.2	0.068	4131.4	0.078	4131.9	0.071	4130.7	0.076	4133.2
0.071	4134.5	0.068	4133.5	0.068	4132.9	0.078	4133.8	0.071	4132.6	0.076	4134.1
0.071	4135.9	0.068	4135.2	0.068	4134.6	0.078	4135.8	0.071	4134.3	0.076	4135.5
0.071	4137.4	0.068	4136.6	0.068	4135.9	0.078	4137.2	0.071	4135.9	0.076	4137.1
0.071	4138.8	0.068	4138.5	0.068	4137.5	0.078	4138.9	0.071	4137.0	0.076	4138.4
0.071	4140.6	0.068	4140.6	0.068	4139.2	0.078	4140.5	0.071	4138.3	0.076	4140.0
0.071	4142.6	0.068	4142.4	0.068	4141.1	0.078	4141.9	0.071	4140.6	0.076	4141.4
0.072	4144.6	0.068	4144.0	0.068	4142.9	0.078	4143.2	0.071	4143.6	0.076	4143.6
0.072	4146.2	0.068	4145.8	0.069	4144.6	0.078	4144.8	0.071	4145.3	0.076	4145.4
0.072	4147.8	0.068	4147.3	0.069	4146.0	0.078	4148.0	0.071	4146.0	0.076	4147.2

0.072	4149.4	0.068	4148.5	0.069	4147.8	0.078	4150.2	0.071	4147.6	0.076	4148.8
0.072	4150.8	0.068	4149.8	0.069	4149.3	0.078	4151.1	0.071	4149.4	0.076	4150.5
0.072	4152.1	0.068	4151.3	0.069	4150.7	0.078	4152.4	0.071	4150.7	0.076	4151.8
0.072	4153.2	0.068	4154.1	0.069	4151.8	0.078	4154.0	0.071	4152.2	0.076	4153.0
0.072	4155.6	0.068	4156.7	0.069	4154.0	0.078	4155.3	0.071	4153.8	0.076	4154.3
0.072	4158.6	0.068	4158.0	0.069	4157.0	0.078	4156.9	0.071	4155.7	0.076	4156.9
0.072	4160.5	0.068	4159.0	0.069	4158.9	0.078	4158.5	0.071	4157.7	0.076	4159.7
0.072	4161.3	0.068	4160.7	0.069	4159.8	0.078	4160.5	0.071	4159.5	0.076	4161.3
0.072	4162.9	0.068	4162.0	0.069	4161.3	0.078	4162.4	0.071	4160.8	0.076	4162.2
0.072	4164.3	0.068	4163.6	0.069	4162.9	0.078	4164.1	0.071	4162.8	0.076	4164.1
0.072	4165.9	0.068	4164.9	0.069	4164.3	0.078	4165.6	0.072	4164.4	0.076	4165.3
0.072	4167.1	0.068	4167.0	0.069	4165.8	0.078	4167.4	0.072	4165.7	0.076	4166.8
0.072	4168.9	0.068	4168.9	0.069	4167.4	0.078	4168.8	0.072	4166.7	0.076	4168.2
0.072	4171.0	0.068	4170.8	0.069	4169.2	0.078	4170.1	0.072	4168.4	0.077	4170.1
0.072	4173.0	0.068	4172.0	0.069	4171.2	0.078	4171.2	0.072	4171.4	0.077	4172.1
0.072	4174.6	0.068	4174.0	0.069	4172.8	0.078	4173.6	0.072	4173.7	0.077	4173.8
0.072	4176.1	0.068	4175.5	0.069	4174.3	0.078	4176.7	0.072	4175.1	0.077	4175.2
0.072	4177.8	0.068	4176.9	0.069	4176.2	0.078	4178.2	0.072	4176.1	0.077	4177.0
0.072	4179.3	0.068	4178.2	0.069	4177.7	0.078	4179.1	0.072	4177.7	0.077	4178.5
0.072	4180.5	0.068	4179.5	0.069	4179.1	0.079	4180.9	0.072	4179.1	0.077	4179.8
0.072	4181.7	0.068	4182.1	0.069	4180.0	0.079	4182.2	0.072	4180.7	0.077	4181.1
0.072	4183.7	0.068	4185.0	0.069	4182.2	0.079	4183.8	0.072	4182.2	0.077	4182.9
0.072	4186.9	0.068	4186.6	0.069	4185.3	0.079	4185.4	0.072	4184.0	0.077	4186.1
0.072	4188.9	0.068	4187.4	0.069	4187.3	0.079	4187.0	0.072	4185.9	0.077	4188.2
0.072	4189.7	0.068	4189.0	0.069	4188.2	0.079	4189.0	0.072	4187.8	0.077	4189.1
0.072	4191.3	0.069	4190.4	0.069	4189.5	0.079	4190.8	0.072	4189.2	0.077	4190.5
0.072	4192.9	0.069	4191.9	0.069	4191.2	0.079	4192.4	0.072	4190.8	0.077	4192.2
0.072	4194.1	0.069	4193.4	0.069	4192.5	0.079	4193.9	0.072	4192.6	0.077	4193.5
0.072	4195.7	0.069	4195.2	0.069	4194.2	0.079	4195.6	0.072	4194.1	0.077	4194.9
0.072	4197.2	0.069	4197.2	0.069	4195.7	0.079	4196.9	0.072	4195.3	0.077	4196.5
0.072	4199.0	0.069	4199.0	0.069	4197.5	0.079	4198.2	0.072	4196.5	0.077	4198.4
0.072	4201.0	0.069	4200.5	0.069	4199.6	0.079	4199.9	0.072	4198.7	0.077	4200.3
0.072	4202.9	0.069	4202.2	0.069	4201.5	0.079	4203.1	0.072	4201.7	0.077	4202.1
0.072	4204.2	0.069	4204.0	0.069	4202.9	0.079	4205.2	0.072	4203.7	0.077	4203.6
0.073	4206.0	0.069	4205.4	0.070	4204.6	0.079	4205.9	0.072	4204.5	0.077	4205.5
0.073	4207.7	0.069	4206.6	0.070	4206.2	0.079	4207.6	0.072	4206.0	0.077	4206.8
0.073	4209.0	0.069	4207.8	0.070	4207.5	0.079	4209.3	0.072	4207.8	0.077	4208.0
0.073	4210.2	0.069	4210.0	0.070	4208.6	0.079	4210.5	0.072	4209.0	0.077	4209.4
0.073	4212.0	0.069	4213.1	0.070	4210.3	0.079	4211.9	0.072	4210.6	0.077	4212.0
0.073	4214.8	0.069	4215.0	0.070	4213.2	0.079	4213.6	0.072	4212.2	0.077	4215.0
0.073	4217.2	0.069	4215.8	0.070	4215.7	0.079	4215.5	0.072	4213.9	0.077	4216.4
0.073	4218.6	0.069	4217.2	0.070	4216.7	0.079	4217.4	0.072	4215.8	0.077	4217.2
0.073	4219.5	0.069	4218.9	0.070	4218.1	0.079	4219.1	0.072	4217.6	0.077	4218.9
0.073	4221.1	0.069	4220.3	0.070	4219.6	0.079	4220.6	0.072	4219.1	0.077	4220.2
0.073	4222.5	0.069	4221.9	0.070	4221.0	0.079	4222.4	0.072	4221.0	0.077	4221.7
0.073	4224.0	0.069	4223.3	0.070	4222.6	0.079	4223.7	0.072	4222.6	0.077	4223.3
0.073	4225.5	0.069	4225.4	0.070	4224.2	0.079	4225.0	0.072	4224.0	0.077	4225.1
0.073	4227.4	0.069	4227.4	0.070	4226.0	0.079	4226.3	0.072	4225.2	0.077	4227.1
0.073	4229.4	0.069	4229.0	0.070	4228.0	0.079	4229.1	0.073	4226.5	0.078	4229.0
0.073	4231.2	0.069	4230.2	0.070	4229.7	0.079	4232.0	0.073	4229.1	0.078	4230.3
0.073	4232.7	0.069	4232.3	0.070	4231.0	0.079	4233.2	0.073	4232.1	0.078	4232.1
0.073	4234.3	0.069	4233.9	0.070	4232.9	0.079	4234.2	0.073	4233.5	0.078	4233.8
0.073	4236.3	0.069	4235.2	0.070	4234.5	0.079	4235.9	0.073	4234.3	0.078	4235.0
0.073	4237.6	0.069	4236.5	0.070	4235.7	0.079	4237.1	0.073	4236.0	0.078	4236.1
0.073	4238.9	0.069	4238.1	0.070	4236.9	0.080	4238.7	0.073	4237.6	0.078	4238.0
0.073	4240.1	0.069	4240.8	0.070	4238.7	0.080	4240.1	0.073	4239.0	0.078	4241.1
0.073	4242.2	0.069	4243.4	0.070	4241.7	0.080	4241.9	0.073	4240.6	0.078	4243.1

0.073	4245.2	0.069	4244.6	0.070	4244.1	0.080	4244.0	0.073	4242.0	0.078	4243.9
0.073	4247.2	0.069	4245.6	0.070	4245.1	0.080	4245.9	0.073	4244.1	0.078	4245.6
0.073	4248.1	0.069	4247.3	0.070	4246.4	0.080	4247.2	0.073	4245.9	0.078	4247.1
0.073	4249.4	0.069	4248.6	0.070	4248.1	0.080	4248.9	0.073	4247.7	0.078	4248.5
0.073	4251.0	0.069	4250.2	0.070	4249.3	0.080	4250.6	0.073	4249.2	0.078	4250.0
0.073	4252.4	0.070	4251.7	0.070	4250.9	0.080	4251.8	0.073	4251.0	0.078	4251.5
0.073	4254.1	0.070	4253.6	0.070	4252.4	0.080	4253.1	0.073	4252.6	0.078	4253.6
0.073	4255.4	0.070	4255.7	0.070	4254.3	0.080	4254.9	0.073	4253.9	0.078	4255.5
0.073	4257.5	0.070	4257.4	0.070	4256.0	0.080	4258.0	0.073	4255.2	0.078	4257.3
0.073	4259.5	0.070	4258.7	0.070	4258.0	0.080	4260.1	0.073	4256.8	0.078	4258.6
0.073	4261.3	0.070	4260.6	0.070	4259.4	0.080	4260.9	0.073	4259.5	0.078	4260.4
0.073	4262.6	0.070	4262.2	0.070	4261.3	0.080	4262.4	0.073	4261.9	0.078	4261.8
0.073	4264.4	0.070	4263.6	0.070	4262.9	0.080	4264.0	0.073	4263.3	0.078	4263.0
0.073	4266.0	0.070	4264.8	0.070	4264.2	0.080	4265.4	0.073	4264.4	0.078	4264.3
0.073	4267.4	0.070	4266.3	0.071	4265.6	0.080	4266.9	0.073	4266.3	0.078	4266.8
0.074	4268.6	0.070	4269.0	0.071	4266.8	0.080	4268.5	0.073	4267.6	0.078	4269.8
0.074	4270.2	0.070	4271.8	0.071	4269.3	0.080	4270.5	0.073	4269.1	0.078	4271.3
0.074	4273.1	0.070	4273.0	0.071	4272.2	0.080	4272.4	0.073	4270.5	0.078	4272.1
0.074	4275.5	0.070	4274.1	0.071	4273.9	0.080	4274.0	0.073	4272.2	0.078	4274.0
0.074	4276.8	0.070	4275.6	0.071	4274.7	0.080	4275.4	0.073	4274.3	0.078	4275.2
0.074	4277.9	0.070	4277.0	0.071	4276.3	0.080	4277.3	0.073	4275.9	0.078	4276.8
0.074	4279.5	0.070	4278.6	0.071	4277.9	0.080	4278.6	0.073	4277.7	0.078	4278.4
0.074	4280.8	0.070	4280.0	0.071	4279.1	0.080	4280.0	0.073	4279.2	0.078	4279.9
0.074	4282.5	0.070	4281.8	0.071	4280.7	0.080	4281.2	0.073	4280.9	0.078	4281.9
0.074	4283.8	0.070	4283.8	0.071	4282.4	0.080	4283.9	0.073	4282.3	0.078	4283.8
0.074	4285.7	0.070	4285.6	0.071	4284.3	0.080	4286.8	0.073	4283.6	0.078	4285.3
0.074	4287.6	0.070	4287.0	0.071	4286.3	0.080	4288.3	0.073	4284.8	0.079	4287.0
0.074	4289.4	0.070	4288.9	0.071	4287.9	0.080	4289.1	0.073	4287.1	0.079	4288.5
0.074	4290.9	0.070	4290.7	0.071	4289.3	0.080	4290.9	0.074	4290.2	0.079	4290.0
0.074	4292.7	0.070	4292.0	0.071	4291.3	0.080	4292.2	0.074	4292.1	0.079	4291.3
0.074	4294.5	0.070	4293.2	0.071	4292.9	0.080	4293.8	0.074	4292.8	0.079	4292.8
0.074	4295.8	0.070	4294.6	0.071	4294.0	0.080	4295.3	0.074	4294.4	0.079	4295.8
0.074	4297.1	0.070	4297.0	0.071	4295.3	0.080	4297.0	0.074	4296.2	0.079	4298.3
0.074	4298.4	0.070	4300.0	0.071	4297.1	0.081	4299.0	0.074	4297.4	0.079	4299.4
0.074	4300.7	0.070	4301.5	0.071	4300.0	0.081	4300.8	0.074	4298.8	0.079	4300.5
0.074	4303.9	0.070	4302.2	0.071	4302.3	0.081	4302.2	0.074	4300.4	0.079	4302.2
0.074	4305.4	0.070	4303.9	0.071	4303.5	0.081	4304.1	0.074	4302.3	0.079	4303.4
0.074	4306.2	0.070	4305.3	0.071	4304.5	0.081	4305.7	0.074	4304.2	0.079	4304.9
0.074	4307.7	0.070	4306.9	0.071	4306.2	0.081	4306.9	0.074	4306.0	0.079	4306.6
0.074	4309.4	0.070	4308.4	0.071	4307.6	0.081	4307.9	0.074	4307.6	0.079	4308.4
0.074	4310.8	0.070	4310.2	0.071	4309.2	0.081	4310.1	0.074	4309.4	0.079	4310.3
0.074	4312.2	0.070	4312.1	0.071	4310.6	0.081	4313.3	0.074	4310.9	0.079	4312.2
0.074	4313.9	0.071	4314.0	0.071	4312.6	0.081	4315.1	0.074	4312.2	0.079	4313.6
0.074	4315.8	0.071	4315.7	0.071	4314.6	0.081	4315.9	0.074	4313.6	0.079	4315.5
0.074	4317.8	0.071	4317.3	0.071	4316.4	0.081	4317.4	0.074	4315.0	0.079	4317.0
0.074	4319.5	0.071	4319.1	0.071	4317.7	0.081	4318.9	0.074	4317.7	0.079	4318.3
0.074	4320.9	0.071	4320.4	0.071	4319.6	0.081	4320.3	0.074	4320.5	0.079	4319.4
0.074	4322.8	0.071	4321.7	0.071	4321.2	0.081	4321.8	0.074	4321.9	0.079	4321.3
0.074	4324.4	0.071	4322.8	0.071	4322.5	0.081	4323.5	0.074	4322.7	0.079	4324.6
0.074	4325.6	0.071	4324.9	0.071	4323.8	0.081	4325.5	0.074	4324.5	0.079	4326.5
0.074	4326.7	0.071	4328.0	0.071	4325.3	0.081	4327.3	0.074	4325.9	0.079	4327.2
0.074	4328.6	0.071	4330.1	0.072	4328.3	0.081	4329.1	0.074	4327.3	0.079	4328.9
0.075	4331.6	0.071	4330.9	0.072	4330.6	0.081	4330.7	0.074	4328.8	0.079	4330.4
0.075	4333.9	0.071	4332.4	0.072	4331.9	0.081	4332.4	0.074	4330.3	0.079	4331.8
0.075	4335.0	0.071	4333.9	0.072	4333.1	0.081	4333.7	0.074	4332.3	0.079	4333.4
0.075	4336.2	0.071	4335.4	0.072	4334.6	0.081	4335.0	0.074	4334.4	0.079	4335.0
0.075	4337.7	0.071	4337.0	0.072	4336.0	0.081	4336.4	0.074	4336.1	0.079	4336.9

0.075	4339.3	0.071	4338.5	0.072	4337.5	0.081	4339.1	0.074	4337.4	0.079	4338.9
0.075	4340.7	0.071	4340.4	0.072	4339.0	0.081	4341.8	0.074	4339.3	0.079	4340.5
0.075	4342.1	0.071	4342.4	0.072	4340.8	0.081	4343.1	0.074	4341.0	0.079	4341.9
0.075	4344.0	0.071	4344.1	0.072	4342.9	0.081	4344.1	0.074	4342.2	0.079	4343.6
0.075	4346.0	0.071	4345.3	0.072	4344.6	0.081	4345.8	0.074	4343.4	0.079	4345.1
0.075	4347.8	0.071	4347.2	0.072	4346.0	0.081	4347.1	0.074	4345.0	0.080	4346.4
0.075	4349.3	0.071	4348.7	0.072	4347.9	0.081	4348.6	0.074	4348.0	0.080	4347.6
0.075	4351.0	0.071	4350.1	0.072	4349.5	0.081	4350.2	0.074	4350.4	0.080	4350.3
0.075	4352.7	0.071	4351.5	0.072	4350.9	0.081	4352.1	0.074	4351.7	0.080	4353.2
0.075	4354.1	0.071	4353.0	0.072	4352.2	0.081	4354.1	0.075	4352.8	0.080	4354.6
0.075	4355.3	0.071	4356.0	0.072	4353.5	0.081	4355.8	0.075	4354.6	0.080	4355.5
0.075	4356.6	0.071	4358.5	0.072	4356.2	0.082	4357.2	0.075	4355.8	0.080	4357.2
0.075	4359.1	0.071	4359.5	0.072	4359.0	0.082	4359.0	0.075	4357.4	0.080	4358.5
0.075	4362.1	0.071	4360.8	0.072	4360.4	0.082	4360.5	0.075	4358.9	0.080	4360.1
0.075	4363.7	0.071	4362.5	0.072	4361.2	0.082	4361.8	0.075	4360.5	0.080	4361.7
0.075	4364.5	0.071	4363.8	0.072	4362.9	0.082	4362.9	0.075	4362.4	0.080	4363.4
0.075	4366.2	0.071	4365.4	0.072	4364.3	0.082	4364.9	0.075	4364.4	0.080	4365.3
0.075	4367.7	0.071	4366.9	0.072	4365.8	0.082	4368.1	0.075	4366.1	0.080	4367.1
0.075	4369.1	0.071	4368.5	0.072	4367.4	0.082	4370.1	0.075	4367.4	0.080	4368.6
0.075	4370.7	0.071	4370.5	0.072	4369.1	0.082	4370.8	0.075	4369.3	0.080	4370.3
0.075	4372.3	0.071	4372.3	0.072	4371.0	0.082	4372.4	0.075	4370.9	0.080	4372.0
0.075	4374.2	0.071	4373.8	0.072	4372.9	0.082	4373.9	0.075	4372.2	0.080	4373.3
0.075	4376.1	0.072	4375.6	0.072	4374.6	0.082	4375.4	0.075	4373.3	0.080	4374.4
0.075	4377.8	0.072	4377.3	0.072	4376.3	0.082	4377.0	0.075	4375.2	0.080	4376.2
0.075	4379.5	0.072	4378.5	0.072	4378.0	0.082	4378.8	0.075	4378.4	0.080	4379.1
0.075	4381.0	0.072	4380.0	0.072	4379.3	0.082	4380.5	0.075	4380.4	0.080	4381.6
0.075	4382.7	0.072	4381.3	0.072	4380.5	0.082	4382.3	0.075	4381.3	0.080	4382.6
0.075	4383.8	0.072	4384.0	0.072	4381.7	0.082	4384.0	0.075	4382.8	0.080	4383.7
0.075	4385.2	0.072	4386.7	0.072	4384.1	0.082	4385.6	0.075	4384.6	0.080	4385.5
0.075	4387.2	0.072	4388.1	0.072	4387.1	0.082	4387.3	0.075	4385.8	0.080	4386.7
0.075	4390.2	0.072	4388.9	0.072	4388.9	0.082	4388.7	0.075	4387.2	0.080	4388.3
0.075	4392.2	0.072	4390.6	0.073	4389.6	0.082	4390.1	0.075	4389.0	0.080	4389.8
0.076	4393.1	0.072	4392.0	0.073	4391.2	0.082	4391.3	0.075	4390.6	0.080	4391.7
0.076	4394.5	0.072	4393.5	0.073	4392.8	0.082	4393.9	0.075	4392.5	0.080	4393.9
0.076	4396.2	0.072	4395.2	0.073	4394.3	0.082	4397.0	0.075	4394.4	0.080	4395.6
0.076	4397.5	0.072	4396.7	0.073	4395.9	0.082	4398.4	0.075	4395.9	0.080	4396.9
0.076	4399.1	0.072	4398.7	0.073	4397.4	0.082	4399.3	0.075	4397.6	0.080	4398.8
0.076	4400.6	0.072	4400.5	0.073	4399.3	0.082	4400.8	0.075	4399.2	0.080	4400.4
0.076	4402.4	0.072	4402.2	0.073	4401.3	0.082	4402.1	0.075	4400.6	0.080	4401.6
0.076	4404.3	0.072	4403.9	0.073	4403.0	0.082	4403.6	0.075	4402.0	0.080	4402.8
0.076	4406.2	0.072	4405.6	0.073	4404.4	0.082	4405.0	0.075	4403.3	0.081	4404.7
0.076	4407.6	0.072	4407.0	0.073	4406.3	0.082	4407.2	0.075	4405.6	0.081	4407.8
0.076	4409.5	0.072	4408.3	0.073	4407.7	0.082	4409.0	0.075	4408.8	0.081	4409.8
0.076	4411.0	0.072	4409.5	0.073	4409.0	0.082	4410.9	0.075	4410.4	0.081	4410.6
0.076	4412.4	0.072	4411.7	0.073	4410.2	0.082	4412.1	0.075	4411.1	0.081	4412.1
0.076	4413.7	0.072	4414.6	0.073	4412.1	0.082	4414.1	0.075	4412.7	0.081	4413.7
0.076	4415.0	0.072	4416.6	0.073	4415.2	0.083	4415.7	0.075	4414.3	0.081	4415.1
0.076	4417.7	0.072	4417.3	0.073	4417.4	0.083	4416.9	0.076	4415.6	0.081	4416.6
0.076	4420.0	0.072	4419.0	0.073	4418.2	0.083	4418.2	0.076	4417.2	0.081	4418.3
0.076	4423.5	0.072	4420.7	0.073	4419.7	0.083	4420.1	0.076	4418.8	0.081	4420.3
0.076	4422.1	0.072	4422.0	0.073	4421.4	0.083	4423.0	0.076	4420.7	0.081	4422.2
0.076	4424.1	0.072	4423.5	0.073	4422.8	0.083	4425.1	0.076	4422.6	0.081	4423.8
0.076	4425.7	0.072	4425.0	0.073	4424.2	0.083	4426.1	0.076	4424.4	0.081	4425.2
0.076	4427.1	0.072	4427.0	0.073	4425.8	0.083	4427.4	0.076	4425.9	0.081	4427.1
0.076	4429.0	0.072	4428.9	0.073	4427.5	0.083	4429.1	0.076	4427.8	0.081	4428.5
0.076	4430.9	0.072	4430.7	0.073	4429.5	0.083	4430.3	0.076	4429.3	0.081	4429.7
0.076	4432.8	0.072	4432.1	0.073	4431.2	0.083	4432.0	0.076	4430.5	0.081	4430.9

0.076	4434.5	0.072	4433.9	0.073	4432.8	0.083	4433.5	0.076	4431.8	0.081	4433.5
0.076	4436.0	0.072	4435.3	0.073	4434.7	0.083	4435.6	0.076	4433.2	0.081	4436.5
0.076	4437.7	0.073	4436.7	0.073	4436.2	0.083	4437.4	0.076	4435.7	0.081	4438.1
0.076	4439.1	0.073	4438.1	0.073	4437.5	0.083	4439.2	0.076	4438.6	0.081	4438.9
0.076	4440.4	0.073	4439.7	0.073	4438.7	0.083	4440.6	0.076	4440.1	0.081	4440.6
0.076	4441.6	0.073	4442.7	0.073	4440.3	0.083	4442.3	0.076	4440.9	0.081	4442.0
0.076	4443.7	0.073	4445.1	0.073	4443.2	0.083	4443.7	0.076	4442.8	0.081	4443.5
0.076	4446.9	0.073	4446.2	0.073	4445.7	0.083	4445.1	0.076	4444.2	0.081	4445.1
0.076	4448.8	0.073	4447.4	0.073	4446.9	0.083	4446.2	0.076	4445.7	0.081	4446.6
0.076	4449.6	0.073	4449.1	0.073	4447.8	0.083	4448.6	0.076	4447.3	0.081	4448.7
0.076	4451.1	0.073	4450.4	0.073	4449.7	0.083	4451.6	0.076	4448.9	0.081	4450.5
0.077	4452.9	0.073	4451.9	0.074	4451.1	0.083	4453.3	0.076	4450.7	0.081	4451.9
0.077	4454.2	0.073	4453.4	0.074	4452.6	0.083	4454.2	0.076	4452.7	0.081	4453.8
0.077	4455.7	0.073	4455.1	0.074	4454.2	0.083	4455.8	0.076	4454.4	0.081	4455.4
0.077	4457.1	0.073	4457.1	0.074	4455.9	0.083	4457.1	0.076	4455.8	0.081	4456.7
0.077	4459.0	0.073	4459.1	0.074	4457.8	0.083	4458.7	0.076	4457.6	0.081	4457.9
0.077	4461.0	0.073	4460.6	0.074	4459.5	0.083	4460.1	0.076	4459.2	0.081	4459.7
0.077	4462.8	0.073	4462.4	0.074	4461.1	0.083	4461.9	0.076	4460.5	0.081	4462.7
0.077	4464.4	0.073	4463.9	0.074	4463.0	0.083	4464.0	0.076	4461.8	0.081	4464.9
0.077	4466.1	0.073	4465.1	0.074	4464.7	0.083	4465.8	0.076	4463.4	0.082	4466.0
0.077	4467.7	0.073	4466.5	0.074	4465.8	0.083	4467.1	0.076	4466.1	0.082	4467.1
0.077	4468.9	0.073	4467.8	0.074	4467.1	0.083	4468.8	0.076	4468.8	0.082	4468.7
0.077	4470.4	0.073	4470.6	0.074	4468.5	0.083	4470.7	0.076	4470.2	0.082	4470.0
0.077	4471.8	0.073	4473.4	0.074	4471.1	0.083	4472.0	0.076	4471.0	0.082	4471.6
0.077	4474.5	0.073	4474.7	0.074	4473.8	0.083	4473.3	0.076	4472.9	0.082	4473.2
0.077	4477.3	0.073	4475.7	0.074	4475.4	0.084	4474.8	0.076	4474.2	0.082	4475.1
0.077	4478.6	0.073	4477.4	0.074	4476.3	0.084	4477.5	0.076	4475.6	0.082	4477.2
0.077	4479.6	0.073	4478.9	0.074	4478.1	0.084	4480.2	0.076	4477.1	0.082	4478.9
0.077	4481.2	0.073	4480.2	0.074	4479.5	0.084	4481.4	0.077	4478.9	0.082	4480.3
0.077	4482.7	0.073	4481.8	0.074	4481.0	0.084	4482.5	0.077	4480.8	0.082	4482.1
0.077	4484.1	0.073	4483.5	0.074	4482.4	0.084	4484.1	0.077	4482.7	0.082	4483.6
0.077	4485.5	0.073	4485.4	0.074	4484.2	0.084	4485.4	0.077	4484.3	0.082	4484.9
0.077	4487.3	0.073	4487.3	0.074	4486.2	0.084	4486.9	0.077	4485.9	0.082	4486.1
0.077	4489.3	0.073	4488.9	0.074	4487.9	0.084	4488.5	0.077	4487.7	0.082	4488.0
0.077	4491.2	0.073	4490.5	0.074	4489.6	0.084	4490.3	0.077	4489.2	0.082	4491.0
0.077	4492.9	0.073	4492.3	0.074	4491.1	0.084	4492.3	0.077	4490.4	0.082	4493.1
0.077	4494.3	0.073	4493.7	0.074	4492.7	0.084	4494.2	0.077	4491.6	0.082	4494.0
0.077	4496.2	0.073	4495.0	0.074	4494.1	0.084	4495.6	0.077	4493.7	0.082	4495.5
0.077	4497.6	0.073	4496.1	0.074	4495.5	0.084	4497.4	0.077	4496.7	0.082	4497.1
0.077	4498.8	0.074	4498.5	0.074	4496.7	0.084	4499.0	0.077	4498.8	0.082	4498.5
0.077	4500.1	0.074	4501.5	0.074	4499.0	0.084	4500.3	0.077	4499.7	0.082	4499.9
0.077	4502.2	0.074	4503.2	0.074	4502.2	0.084	4501.3	0.077	4501.0	0.082	4501.5
0.077	4505.4	0.074	4503.8	0.074	4504.0	0.084	4503.5	0.077	4502.8	0.082	4503.6
0.077	4507.1	0.074	4505.8	0.074	4504.7	0.084	4506.6	0.077	4504.0	0.082	4505.5
0.077	4507.7	0.074	4507.2	0.074	4506.3	0.084	4508.5	0.077	4505.7	0.082	4507.2
0.077	4509.5	0.074	4508.6	0.074	4508.1	0.084	4509.1	0.077	4507.1	0.082	4508.6
0.077	4511.2	0.074	4510.2	0.074	4509.2	0.084	4510.7	0.077	4508.9	0.082	4510.5
0.077	4512.6	0.074	4511.7	0.074	4510.7	0.084	4512.3	0.077	4511.0	0.082	4511.9
0.077	4514.1	0.074	4513.6	0.075	4512.3	0.084	4513.7	0.077	4512.7	0.082	4513.1
0.078	4515.5	0.074	4515.6	0.075	4514.2	0.084	4515.2	0.077	4514.1	0.082	4514.2
0.078	4517.5	0.074	4517.4	0.075	4516.1	0.084	4517.0	0.077	4515.9	0.082	4516.6
0.078	4519.5	0.074	4518.8	0.075	4518.0	0.084	4519.1	0.077	4517.7	0.082	4519.8
0.078	4521.3	0.074	4520.6	0.075	4519.4	0.084	4520.9	0.077	4519.1	0.082	4521.5
0.078	4522.7	0.074	4522.2	0.075	4521.3	0.084	4522.3	0.077	4520.4	0.082	4522.3
0.078	4524.2	0.074	4523.4	0.075	4522.9	0.084	4524.0	0.077	4521.6	0.082	4523.9
0.078	4526.1	0.074	4524.6	0.075	4524.1	0.084	4525.6	0.077	4523.8	0.083	4525.3
0.078	4527.3	0.074	4526.3	0.075	4525.3	0.084	4526.9	0.077	4526.7	0.083	4526.8

0.078	4528.6	0.074	4529.6	0.075	4527.3	0.084	4528.3	0.077	4528.6	0.083	4528.4
0.078	4530.1	0.074	4531.8	0.075	4530.4	0.084	4529.7	0.077	4529.6	0.083	4530.1
0.078	4533.1	0.074	4532.8	0.075	4532.4	0.084	4532.4	0.077	4531.0	0.083	4531.9
0.078	4535.5	0.074	4534.0	0.075	4533.1	0.085	4535.3	0.077	4532.8	0.083	4533.8
0.078	4536.8	0.074	4535.8	0.075	4534.7	0.085	4536.4	0.077	4534.1	0.083	4535.4
0.078	4537.9	0.074	4537.0	0.075	4536.3	0.085	4537.6	0.077	4535.6	0.083	4537.0
0.078	4539.7	0.074	4538.6	0.075	4537.6	0.085	4539.4	0.077	4537.2	0.083	4538.7
0.078	4541.0	0.074	4540.2	0.075	4539.1	0.085	4540.5	0.077	4539.1	0.083	4540.1
0.078	4542.5	0.074	4541.7	0.075	4540.7	0.085	4542.1	0.078	4540.9	0.083	4541.4
0.078	4544.1	0.074	4543.7	0.075	4542.6	0.085	4543.7	0.078	4542.8	0.083	4542.8
0.078	4545.5	0.074	4545.6	0.075	4544.6	0.085	4545.3	0.078	4544.2	0.083	4545.5
0.078	4547.5	0.074	4547.2	0.075	4546.5	0.085	4547.2	0.078	4545.9	0.083	4548.3
0.078	4549.4	0.074	4548.8	0.075	4547.7	0.085	4549.1	0.078	4547.6	0.083	4549.7
0.078	4551.1	0.074	4550.4	0.075	4549.6	0.085	4550.4	0.078	4548.9	0.083	4550.5
0.078	4552.5	0.074	4552.0	0.075	4551.3	0.085	4552.3	0.078	4550.3	0.083	4552.2
0.078	4554.3	0.074	4553.3	0.075	4552.5	0.085	4553.9	0.078	4551.5	0.083	4553.4
0.078	4555.8	0.074	4554.5	0.075	4553.7	0.085	4555.2	0.078	4553.9	0.083	4554.9
0.078	4557.2	0.074	4557.1	0.075	4555.4	0.085	4556.5	0.078	4556.9	0.083	4556.5
0.078	4558.5	0.075	4560.1	0.075	4558.2	0.085	4558.2	0.078	4558.7	0.083	4558.6
0.078	4560.4	0.075	4561.6	0.075	4560.7	0.085	4561.3	0.078	4559.4	0.083	4560.5
0.078	4563.5	0.075	4562.2	0.075	4561.8	0.085	4563.5	0.078	4561.1	0.083	4562.3
0.078	4565.7	0.075	4564.1	0.075	4563.0	0.085	4564.3	0.078	4562.7	0.083	4563.5
0.078	4566.4	0.075	4565.5	0.075	4564.8	0.085	4565.8	0.078	4564.0	0.083	4565.4
0.078	4567.8	0.075	4566.9	0.075	4566.1	0.085	4567.4	0.078	4565.6	0.083	4567.0
0.078	4569.6	0.075	4568.6	0.075	4567.6	0.085	4568.6	0.078	4567.1	0.083	4568.3
0.078	4570.8	0.075	4570.2	0.075	4569.1	0.085	4570.2	0.078	4568.9	0.083	4569.6
0.078	4572.4	0.075	4572.1	0.075	4570.8	0.085	4571.7	0.078	4570.9	0.083	4571.4
0.078	4573.9	0.075	4574.1	0.076	4572.8	0.085	4573.7	0.078	4572.7	0.083	4574.1
0.078	4575.8	0.075	4575.7	0.076	4574.6	0.085	4575.6	0.078	4574.1	0.083	4576.4
0.079	4577.7	0.075	4577.1	0.076	4576.2	0.085	4577.5	0.078	4575.9	0.083	4577.6
0.079	4579.5	0.075	4578.8	0.076	4577.7	0.085	4579.1	0.078	4577.7	0.083	4578.7
0.079	4581.1	0.075	4580.3	0.076	4579.5	0.085	4580.8	0.078	4579.0	0.083	4580.5
0.079	4582.8	0.075	4581.6	0.076	4580.9	0.085	4582.3	0.078	4580.3	0.083	4581.7
0.079	4584.5	0.075	4582.8	0.076	4582.3	0.085	4583.5	0.078	4581.5	0.084	4583.3
0.079	4585.7	0.075	4585.0	0.076	4583.5	0.085	4584.7	0.078	4584.1	0.084	4584.8
0.079	4587.0	0.075	4588.1	0.076	4586.0	0.085	4586.9	0.078	4587.0	0.084	4586.8
0.079	4588.3	0.075	4589.9	0.076	4589.1	0.085	4589.7	0.078	4588.6	0.084	4588.7
0.079	4590.6	0.075	4590.6	0.076	4590.5	0.085	4591.7	0.078	4589.3	0.084	4590.5
0.079	4593.8	0.075	4592.4	0.076	4591.4	0.085	4592.3	0.078	4591.0	0.084	4591.8
0.079	4595.4	0.075	4593.9	0.076	4593.1	0.086	4594.2	0.078	4592.6	0.084	4593.7
0.079	4596.1	0.075	4595.4	0.076	4594.4	0.086	4595.8	0.078	4594.0	0.084	4595.3
0.079	4597.9	0.075	4596.9	0.076	4595.9	0.086	4597.2	0.078	4595.5	0.084	4596.5
0.079	4599.5	0.075	4598.5	0.076	4597.6	0.086	4598.5	0.078	4597.2	0.084	4597.8
0.079	4600.9	0.075	4600.3	0.076	4599.1	0.086	4600.2	0.078	4599.2	0.084	4599.6
0.079	4602.5	0.075	4602.3	0.076	4601.0	0.086	4602.3	0.078	4601.0	0.084	4602.8
0.079	4604.0	0.075	4604.0	0.076	4602.9	0.086	4604.2	0.078	4602.8	0.084	4604.9
0.079	4605.9	0.075	4605.3	0.076	4604.6	0.086	4605.9	0.078	4604.2	0.084	4605.6
0.079	4607.9	0.075	4607.1	0.076	4605.9	0.086	4607.4	0.079	4606.0	0.084	4607.1
0.079	4609.6	0.075	4608.7	0.076	4607.8	0.086	4609.0	0.079	4607.5	0.084	4608.7
0.079	4610.9	0.075	4609.9	0.076	4609.4	0.086	4610.3	0.079	4609.0	0.084	4610.1
0.079	4612.8	0.075	4611.2	0.076	4610.6	0.086	4611.7	0.079	4610.2	0.084	4611.7
0.079	4614.2	0.075	4613.2	0.076	4611.9	0.086	4613.0	0.079	4611.5	0.084	4613.1
0.079	4615.6	0.075	4616.2	0.076	4613.9	0.086	4615.9	0.079	4614.3	0.084	4615.1
0.079	4616.9	0.075	4618.3	0.076	4617.1	0.086	4618.6	0.079	4617.0	0.084	4617.1
0.079	4618.6	0.075	4619.3	0.076	4619.0	0.086	4619.9	0.079	4618.6	0.084	4618.7
0.079	4621.7	0.076	4620.7	0.076	4619.8	0.086	4620.9	0.079	4619.3	0.084	4620.3
0.079	4623.9	0.076	4622.5	0.076	4621.3	0.086	4622.8	0.079	4621.1	0.084	4622.1

0.079	4624.9	0.076	4623.7	0.076	4623.0	0.086	4623.9	0.079	4622.5	0.084	4623.7
0.079	4626.3	0.076	4625.1	0.076	4624.1	0.086	4625.4	0.079	4624.0	0.084	4624.8
0.079	4628.0	0.076	4626.6	0.076	4625.8	0.086	4626.9	0.079	4625.5	0.084	4626.2
0.079	4629.3	0.076	4628.6	0.076	4627.4	0.086	4628.7	0.079	4627.2	0.084	4628.3
0.079	4630.8	0.076	4630.5	0.076	4629.4	0.086	4630.5	0.079	4629.3	0.084	4631.5
0.079	4632.2	0.076	4632.3	0.076	4631.2	0.086	4632.5	0.079	4631.0	0.084	4633.2
0.079	4634.0	0.076	4633.8	0.076	4633.1	0.086	4633.8	0.079	4632.7	0.084	4633.8
0.079	4636.0	0.076	4635.5	0.077	4634.4	0.086	4635.7	0.079	4634.1	0.084	4635.4
0.079	4637.8	0.076	4637.2	0.077	4636.3	0.086	4637.2	0.079	4636.0	0.084	4637.0
0.080	4639.4	0.076	4638.5	0.077	4637.7	0.086	4638.4	0.079	4637.6	0.084	4638.4
0.080	4641.0	0.076	4639.8	0.077	4639.1	0.086	4639.8	0.079	4638.9	0.084	4639.9
0.080	4642.8	0.076	4641.1	0.077	4640.3	0.086	4641.7	0.079	4640.1	0.084	4641.6
0.080	4644.2	0.076	4643.9	0.077	4642.0	0.086	4644.9	0.079	4641.6	0.085	4643.7
0.080	4645.4	0.076	4646.7	0.077	4644.9	0.086	4646.9	0.079	4644.4	0.085	4645.6
0.080	4646.7	0.076	4648.1	0.077	4647.4	0.086	4647.5	0.079	4647.1	0.085	4647.0
0.080	4649.0	0.076	4648.8	0.077	4648.4	0.086	4649.1	0.079	4648.5	0.085	4648.9
0.080	4652.0	0.076	4650.6	0.077	4649.7	0.086	4650.7	0.079	4649.4	0.085	4650.4
0.080	4653.9	0.076	4652.0	0.077	4651.3	0.087	4652.0	0.079	4651.0	0.085	4651.9
0.080	4654.5	0.076	4653.6	0.077	4652.6	0.087	4653.5	0.079	4652.6	0.085	4652.9
0.080	4656.1	0.076	4655.0	0.077	4654.3	0.087	4655.2	0.079	4654.0	0.085	4654.4
0.080	4657.7	0.076	4656.8	0.077	4656.0	0.087	4657.1	0.079	4655.6	0.085	4657.3
0.080	4659.2	0.076	4658.8	0.077	4657.6	0.087	4659.0	0.079	4657.1	0.085	4659.9
0.080	4660.6	0.076	4660.8	0.077	4659.5	0.087	4660.9	0.079	4659.0	0.085	4661.1
0.080	4662.2	0.076	4662.2	0.077	4661.4	0.087	4662.1	0.079	4660.9	0.085	4662.1
0.080	4664.2	0.076	4663.9	0.077	4662.9	0.087	4664.1	0.079	4662.7	0.085	4663.8
0.080	4666.2	0.076	4665.6	0.077	4664.4	0.087	4665.4	0.079	4664.1	0.085	4665.3
0.080	4667.9	0.076	4667.0	0.077	4666.1	0.087	4666.7	0.079	4665.9	0.085	4666.8
0.080	4669.2	0.076	4668.4	0.077	4667.4	0.087	4667.9	0.079	4667.6	0.085	4668.3
0.080	4671.1	0.076	4669.7	0.077	4668.7	0.087	4670.3	0.080	4668.9	0.085	4670.2
0.080	4672.7	0.076	4671.8	0.077	4670.3	0.087	4673.3	0.080	4670.4	0.085	4672.2
0.080	4674.0	0.076	4674.9	0.077	4673.1	0.087	4674.9	0.080	4671.7	0.085	4673.9
0.080	4675.3	0.076	4676.6	0.077	4675.7	0.087	4675.8	0.080	4674.1	0.085	4675.3
0.080	4676.7	0.076	4677.3	0.077	4677.0	0.087	4677.5	0.080	4676.9	0.085	4677.1
0.080	4679.5	0.076	4679.0	0.077	4678.0	0.087	4678.9	0.080	4678.6	0.085	4678.6
0.080	4682.2	0.076	4680.6	0.077	4679.9	0.087	4680.5	0.080	4679.3	0.085	4679.9
0.080	4683.6	0.077	4682.0	0.077	4681.2	0.087	4681.9	0.080	4680.9	0.085	4681.2
0.080	4684.5	0.077	4683.5	0.077	4682.6	0.087	4683.6	0.080	4682.6	0.085	4682.9
0.080	4686.1	0.077	4685.2	0.077	4684.0	0.087	4685.6	0.080	4683.9	0.085	4685.8
0.080	4687.6	0.077	4687.2	0.077	4685.8	0.087	4687.6	0.080	4685.6	0.085	4688.2
0.080	4689.1	0.077	4689.0	0.077	4687.7	0.087	4689.3	0.080	4687.1	0.085	4689.1
0.080	4690.5	0.077	4690.6	0.077	4689.6	0.087	4690.4	0.080	4689.2	0.085	4690.5
0.080	4692.4	0.077	4691.9	0.077	4691.2	0.087	4692.3	0.080	4691.1	0.085	4692.3
0.080	4694.4	0.077	4693.9	0.077	4692.9	0.087	4693.8	0.080	4692.9	0.085	4693.5
0.080	4696.1	0.077	4695.4	0.077	4694.5	0.087	4695.0	0.080	4694.0	0.085	4695.0
0.080	4697.8	0.077	4696.8	0.078	4696.0	0.087	4696.4	0.080	4696.0	0.085	4696.6
0.080	4699.2	0.077	4698.0	0.078	4697.3	0.087	4699.2	0.080	4697.7	0.085	4698.5
0.080	4700.9	0.077	4700.0	0.078	4698.5	0.087	4701.8	0.080	4699.0	0.085	4700.4
0.081	4702.5	0.077	4703.0	0.078	4701.0	0.087	4703.0	0.080	4700.3	0.085	4702.1
0.081	4703.8	0.077	4705.0	0.078	4704.0	0.087	4704.1	0.080	4701.5	0.086	4703.6
0.081	4705.0	0.077	4705.9	0.078	4705.6	0.087	4706.0	0.080	4704.0	0.086	4705.5
0.081	4707.2	0.077	4707.3	0.078	4706.2	0.087	4707.2	0.080	4706.8	0.086	4707.0
0.081	4710.2	0.077	4708.9	0.078	4707.9	0.087	4708.7	0.080	4708.6	0.086	4708.2
0.081	4712.2	0.077	4710.3	0.078	4709.4	0.087	4710.3	0.080	4709.4	0.086	4709.5
0.081	4713.0	0.077	4711.8	0.078	4710.9	0.088	4712.0	0.080	4710.9	0.086	4711.4
0.081	4714.6	0.077	4713.4	0.078	4712.4	0.088	4714.0	0.080	4712.8	0.086	4714.5
0.081	4716.1	0.077	4715.5	0.078	4714.0	0.088	4715.9	0.080	4714.0	0.086	4716.5
0.081	4717.6	0.077	4717.3	0.078	4715.9	0.088	4717.2	0.080	4715.6	0.086	4717.3

0.081	4719.1	0.077	4719.0	0.078	4718.0	0.088	4719.0	0.080	4717.2	0.086	4718.7
0.081	4720.5	0.077	4720.4	0.078	4719.5	0.088	4720.6	0.080	4719.1	0.086	4720.5
0.081	4722.6	0.077	4722.2	0.078	4721.1	0.088	4721.9	0.080	4721.0	0.086	4721.7
0.081	4724.5	0.077	4723.8	0.078	4722.9	0.088	4723.1	0.080	4722.8	0.086	4723.4
0.081	4726.2	0.077	4724.9	0.078	4724.5	0.088	4725.0	0.080	4724.1	0.086	4724.8
0.081	4727.6	0.077	4726.1	0.078	4725.7	0.088	4728.4	0.080	4725.9	0.086	4726.9
0.081	4729.5	0.077	4728.5	0.078	4727.0	0.088	4730.3	0.080	4727.6	0.086	4728.8
0.081	4731.0	0.077	4731.6	0.078	4728.7	0.088	4730.9	0.080	4728.9	0.086	4730.7
0.081	4732.3	0.077	4733.3	0.078	4731.6	0.088	4732.4	0.080	4730.2	0.086	4732.0
0.081	4733.5	0.077	4734.0	0.078	4734.0	0.088	4734.0	0.080	4731.5	0.086	4733.9
0.081	4735.3	0.077	4735.6	0.078	4735.1	0.088	4735.2	0.081	4734.2	0.086	4735.2
0.081	4738.2	0.077	4737.1	0.078	4736.2	0.088	4737.0	0.081	4737.0	0.086	4736.5
0.081	4740.5	0.077	4738.5	0.078	4737.9	0.088	4738.6	0.081	4738.6	0.086	4737.7
0.081	4741.9	0.077	4740.0	0.078	4739.4	0.088	4740.6	0.081	4739.5	0.086	4740.1
0.081	4742.7	0.077	4741.8	0.078	4741.0	0.088	4742.5	0.081	4741.0	0.086	4743.0
0.081	4744.4	0.078	4743.8	0.078	4742.5	0.088	4744.1	0.081	4742.6	0.086	4744.6
0.081	4745.7	0.078	4745.6	0.078	4744.4	0.088	4745.6	0.081	4744.1	0.086	4745.6
0.081	4747.3	0.078	4747.4	0.078	4746.2	0.088	4747.5	0.081	4745.6	0.086	4747.5
0.081	4748.8	0.078	4748.8	0.078	4748.1	0.088	4748.6	0.081	4746.9	0.086	4748.7
0.081	4750.7	0.078	4750.6	0.078	4749.6	0.088	4750.0	0.081	4749.0	0.086	4750.1
0.081	4752.7	0.078	4752.1	0.078	4751.2	0.088	4751.2	0.081	4750.9	0.086	4751.6
0.081	4754.5	0.078	4753.3	0.078	4752.9	0.088	4753.7	0.081	4752.7	0.086	4753.6
0.081	4756.2	0.078	4754.5	0.078	4754.1	0.088	4756.8	0.081	4754.1	0.086	4755.5
0.081	4757.7	0.078	4756.8	0.078	4755.5	0.088	4758.2	0.081	4756.0	0.086	4757.1
0.081	4759.3	0.078	4759.9	0.079	4756.8	0.088	4759.0	0.081	4757.6	0.086	4758.7
0.081	4760.8	0.078	4761.6	0.079	4759.5	0.088	4760.8	0.081	4759.0	0.087	4760.3
0.081	4762.1	0.078	4762.3	0.079	4762.5	0.088	4762.1	0.081	4760.2	0.087	4761.5
0.082	4763.3	0.078	4764.0	0.079	4763.9	0.088	4763.7	0.081	4761.6	0.087	4762.7
0.082	4765.4	0.078	4765.4	0.079	4764.6	0.088	4765.4	0.081	4764.2	0.087	4764.7
0.082	4768.5	0.078	4767.0	0.079	4766.5	0.088	4766.9	0.081	4767.1	0.087	4768.1
0.082	4770.4	0.078	4768.2	0.079	4767.8	0.088	4768.9	0.081	4768.5	0.087	4769.8
0.082	4771.2	0.078	4770.3	0.079	4769.3	0.089	4770.9	0.081	4769.3	0.087	4770.6
0.082	4772.7	0.078	4772.3	0.079	4770.9	0.089	4772.3	0.081	4770.9	0.087	4772.5
0.082	4774.4	0.078	4774.1	0.079	4772.5	0.089	4773.8	0.081	4772.6	0.087	4773.5
0.082	4775.9	0.078	4775.2	0.079	4774.4	0.089	4775.5	0.081	4774.0	0.087	4774.8
0.082	4777.3	0.078	4777.3	0.079	4776.3	0.089	4776.9	0.081	4775.6	0.087	4776.2
0.082	4779.0	0.078	4778.9	0.079	4778.0	0.089	4778.2	0.081	4777.1	0.087	4778.3
0.082	4780.9	0.078	4780.1	0.079	4779.4	0.089	4779.8	0.081	4779.1	0.087	4780.3
0.082	4782.8	0.078	4781.3	0.079	4781.2	0.089	4782.7	0.081	4781.0	0.087	4782.0
0.082	4784.5	0.078	4783.1	0.079	4782.7	0.089	4785.2	0.081	4782.7	0.087	4782.4
0.082	4785.7	0.078	4786.3	0.079	4783.9	0.089	4786.1	0.081	4784.1	0.087	4785.8
0.082	4787.7	0.078	4788.5	0.079	4785.1	0.089	4787.5	0.081	4786.0	0.087	4784.3
0.082	4789.4	0.078	4789.2	0.079	4787.5	0.089	4789.3	0.081	4787.6	0.088	4779.8
0.082	4790.6	0.078	4790.7	0.079	4790.8	0.089	4790.5	0.081	4789.0	0.090	4768.8
0.082	4791.8	0.078	4792.2	0.079	4792.3	0.089	4792.0	0.081	4790.1	0.094	4767.8
0.082	4793.5	0.078	4793.6	0.079	4792.9	0.089	4793.6	0.081	4791.6	0.098	4780.7
0.082	4796.2	0.078	4795.0	0.079	4794.5	0.089	4795.5	0.081	4794.3	0.103	4794.8
0.082	4798.9	0.078	4796.9	0.079	4796.1	0.089	4797.4	0.081	4796.9	0.108	4793.5
0.082	4800.3	0.078	4798.7	0.079	4797.5	0.089	4799.1	0.082	4798.6	0.112	4800.1
0.082	4801.3	0.079	4800.6	0.079	4799.1	0.089	4800.6	0.082	4799.3	0.117	4809.0
0.082	4803.0	0.079	4802.0	0.079	4800.8	0.089	4802.5	0.082	4801.0	0.120	4817.6
0.082	4804.2	0.079	4804.0	0.079	4802.7	0.089	4803.7	0.082	4802.5	0.122	4816.2
0.082	4805.8	0.079	4805.3	0.079	4804.6	0.089	4805.0	0.082	4804.0	0.124	4813.6
0.082	4807.2	0.079	4806.4	0.079	4806.4	0.089	4806.3	0.082	4805.7	0.126	4810.4
0.082	4809.0	0.079	4808.1	0.079	4807.8	0.089	4809.2	0.082	4807.3	0.127	4806.0
0.082	4810.9	0.079	4812.1	0.079	4809.5	0.089	4812.1	0.082	4809.2	0.129	4809.8
0.082	4813.0	0.079	4812.8	0.079	4811.2	0.089	4813.2	0.082	4811.1	0.131	4811.1

0.082	4814.3	0.079	4814.0	0.079	4812.3	0.089	4814.1	0.082	4812.8	0.133	4817.0
0.082	4816.0	0.079	4815.2	0.079	4813.6	0.089	4816.0	0.082	4813.4	0.134	4822.9
0.082	4817.8	0.079	4816.4	0.079	4815.3	0.089	4817.1	0.082	4817.3	0.134	4822.2
0.082	4819.3	0.079	4818.7	0.079	4818.2	0.089	4818.7	0.082	4816.6	0.134	4821.7
0.082	4820.6	0.079	4820.4	0.080	4820.6	0.089	4820.2	0.082	4818.2	0.135	4822.3
0.082	4821.7	0.079	4822.2	0.080	4821.8	0.089	4822.1	0.082	4820.1	0.135	4821.8
0.082	4824.0	0.079	4822.6	0.080	4823.0	0.089	4824.1	0.082	4822.8	0.135	4825.1
0.083	4827.0	0.079	4826.2	0.080	4824.6	0.089	4825.9	0.082	4825.5	0.135	4825.8
0.083	4828.9	0.079	4827.0	0.080	4826.0	0.089	4827.2	0.082	4826.7	0.135	4825.4
0.083	4829.6	0.080	4826.9	0.080	4827.6	0.090	4829.0	0.082	4827.8	0.136	4829.3
0.083	4831.2	0.080	4815.8	0.080	4829.1	0.090	4830.6	0.082	4829.6	0.136	4830.8
0.083	4832.7	0.083	4829.7	0.080	4830.9	0.090	4831.7	0.082	4830.8	0.136	4830.2
0.083	4834.0	0.084	4834.9	0.080	4832.8	0.090	4832.9	0.082	4832.4	0.136	4835.1
0.083	4835.6	0.086	4837.1	0.080	4834.6	0.090	4835.6	0.082	4834.0	0.136	4834.6
0.083	4837.2	0.087	4837.1	0.080	4836.0	0.090	4838.5	0.082	4835.4	0.136	4836.9
0.083	4839.3	0.089	4838.2	0.080	4837.9	0.090	4840.0	0.082	4837.5	0.136	4838.6
0.083	4841.2	0.090	4842.5	0.080	4839.6	0.090	4840.8	0.082	4839.2	0.136	4840.8
0.083	4842.9	0.091	4844.1	0.080	4841.0	0.090	4842.5	0.082	4841.0	0.137	4841.8
0.083	4844.1	0.093	4844.0	0.080	4842.2	0.090	4843.9	0.082	4842.5	0.137	4843.8
0.083	4846.2	0.094	4845.4	0.080	4843.4	0.090	4845.4	0.082	4844.2	0.137	4845.6
0.083	4847.8	0.095	4847.7	0.080	4845.9	0.090	4846.9	0.082	4845.8	0.137	4847.7
0.083	4849.0	0.097	4849.1	0.080	4849.0	0.090	4848.8	0.082	4847.1	0.137	4848.5
0.083	4850.3	0.098	4850.5	0.080	4850.7	0.090	4850.7	0.082	4848.4	0.137	4850.2
0.083	4851.9	0.099	4851.6	0.080	4851.3	0.090	4852.4	0.082	4850.3	0.137	4850.9
0.083	4854.6	0.100	4854.6	0.080	4853.0	0.090	4853.7	0.082	4853.3	0.137	4854.7
0.083	4857.2	0.102	4854.5	0.080	4854.5	0.090	4855.5	0.082	4855.3	0.137	4855.0
0.083	4858.5	0.103	4855.0	0.080	4855.9	0.090	4856.8	0.082	4856.3	0.138	4856.8
0.083	4859.4	0.104	4858.9	0.080	4857.5	0.090	4857.9	0.082	4857.6	0.138	4856.9
0.083	4861.1	0.106	4861.5	0.080	4859.1	0.090	4860.2	0.083	4859.5	0.138	4861.8
0.083	4862.6	0.107	4862.5	0.080	4861.0	0.090	4864.0	0.083	4860.7	0.138	4861.6
0.083	4864.1	0.109	4865.2	0.080	4862.9	0.090	4864.3	0.083	4862.2	0.138	4863.8
0.083	4865.6	0.110	4869.5	0.080	4864.6	0.090	4865.4	0.083	4863.5	0.138	4864.9
0.083	4867.3	0.111	4869.9	0.080	4866.1	0.090	4866.3	0.083	4865.7	0.138	4867.7
0.083	4869.6	0.111	4870.2	0.080	4868.0	0.090	4868.7	0.083	4867.6	0.138	4869.1
0.083	4871.2	0.112	4871.9	0.080	4869.5	0.091	4869.9	0.083	4869.4	0.138	4869.9
0.083	4872.8	0.113	4872.3	0.080	4870.7	0.091	4871.8	0.083	4871.0	0.139	4871.8
0.083	4874.3	0.113	4873.7	0.080	4871.9	0.091	4869.9	0.083	4872.7	0.139	4871.8
0.083	4876.1	0.114	4877.0	0.080	4874.0	0.092	4857.8	0.083	4873.9	0.139	4876.8
0.083	4877.6	0.114	4875.6	0.080	4876.9	0.095	4847.6	0.083	4875.3	0.139	4876.8
0.083	4878.8	0.115	4877.8	0.080	4879.0	0.101	4855.9	0.083	4876.5	0.139	4878.8
0.083	4880.0	0.116	4879.3	0.080	4880.0	0.107	4874.7	0.083	4879.3	0.139	4880.1
0.083	4882.3	0.117	4881.0	0.081	4881.3	0.113	4871.1	0.083	4881.9	0.139	4882.4
0.083	4885.4	0.118	4884.6	0.081	4883.0	0.120	4869.9	0.083	4883.2	0.139	4884.5
0.083	4887.2	0.119	4885.3	0.081	4884.2	0.128	4870.6	0.083	4884.4	0.139	4884.7
0.083	4887.9	0.120	4885.8	0.081	4885.9	0.137	4869.9	0.083	4886.2	0.139	4887.0
0.084	4889.5	0.121	4888.7	0.081	4887.3	0.140	4959.0	0.083	4887.5	0.140	4887.3
0.084	4891.1	0.121	4893.5	0.081	4889.5	0.141	4917.6	0.083	4888.9	0.140	4892.0
0.084	4892.5	0.122	4894.2	0.081	4891.3	0.141	4902.7	0.083	4890.4	0.140	4891.9
0.084	4894.0	0.122	4895.5	0.081	4893.1	0.141	4899.9	0.083	4892.4	0.140	4893.8
0.084	4895.4	0.122	4898.7	0.081	4894.3	0.142	4897.5	0.083	4894.3	0.140	4895.1
0.084	4897.4	0.123	4898.1	0.081	4896.3	0.142	4897.2	0.083	4895.9	0.140	4895.8
0.084	4899.4	0.123	4901.2	0.081	4897.9	0.142	4898.8	0.083	4897.4	0.140	4899.4
0.084	4901.1	0.123	4900.5	0.081	4899.1	0.142	4900.7	0.083	4899.2	0.140	4899.9
0.084	4902.5	0.123	4901.4	0.081	4900.5	0.142	4904.9	0.083	4900.6	0.140	4901.9
0.084	4904.4	0.123	4906.1	0.081	4901.9	0.142	4903.5	0.083	4901.8	0.140	4902.4
0.084	4906.1	0.123	4905.3	0.081	4904.5	0.143	4905.5	0.083	4903.1	0.141	4907.7
0.084	4907.4	0.124	4907.1	0.081	4907.3	0.143	4909.5	0.083	4905.8	0.141	4906.9

0.084	4908.7	0.124	4907.4	0.081	4908.9	0.143	4908.4	0.083	4909.1	0.141	4908.7
0.084	4910.2	0.124	4911.3	0.081	4909.5	0.143	4910.7	0.083	4909.6	0.141	4910.6
0.084	4913.2	0.124	4912.0	0.081	4911.3	0.143	4911.1	0.083	4911.4	0.141	4910.9
0.084	4915.6	0.124	4914.2	0.081	4912.8	0.143	4914.3	0.083	4912.5	0.141	4914.3
0.084	4916.7	0.124	4913.7	0.081	4914.3	0.143	4915.7	0.084	4913.7	0.141	4914.8
0.084	4917.8	0.124	4918.0	0.081	4915.8	0.143	4916.9	0.084	4915.4	0.141	4917.1
0.084	4919.5	0.124	4918.6	0.081	4917.4	0.144	4920.3	0.084	4917.5	0.141	4917.2
0.084	4920.7	0.124	4920.7	0.081	4919.7	0.144	4921.0	0.084	4919.0	0.142	4922.5
0.084	4922.3	0.125	4921.1	0.081	4921.3	0.144	4922.5	0.084	4921.1	0.142	4921.9
0.084	4923.9	0.125	4925.5	0.081	4922.9	0.144	4923.3	0.084	4921.6	0.142	4923.5
0.084	4925.8	0.125	4926.1	0.081	4924.4	0.144	4927.8	0.084	4924.1	0.142	4925.2
0.084	4928.0	0.125	4926.7	0.081	4926.2	0.144	4927.5	0.084	4926.5	0.142	4926.5
0.084	4929.7	0.125	4928.7	0.081	4927.7	0.144	4929.2	0.084	4927.0	0.142	4929.2
0.084	4931.0	0.125	4928.8	0.081	4928.9	0.144	4930.1	0.084	4928.1	0.142	4929.7
0.084	4933.0	0.125	4934.2	0.081	4930.2	0.145	4933.8	0.084	4928.1	0.142	4931.9
0.084	4934.4	0.125	4933.9	0.081	4932.2	0.145	4934.4	0.085	4924.5	0.142	4932.1
0.084	4935.6	0.125	4935.1	0.081	4935.3	0.145	4935.6	0.087	4931.3	0.142	4936.8
0.084	4936.7	0.125	4937.2	0.081	4937.3	0.145	4937.0	0.088	4936.1	0.143	4936.6
0.084	4938.7	0.126	4937.3	0.081	4938.2	0.145	4938.4	0.089	4933.1	0.143	4938.9
0.084	4941.9	0.126	4942.4	0.081	4939.7	0.145	4941.3	0.091	4932.8	0.143	4939.7
0.084	4943.9	0.126	4942.3	0.081	4941.2	0.145	4941.7	0.094	4936.0	0.143	4943.8
0.084	4944.6	0.126	4943.9	0.081	4942.7	0.145	4943.8	0.097	4933.7	0.143	4944.0
0.084	4946.1	0.126	4945.5	0.082	4944.2	0.145	4943.8	0.100	4936.9	0.143	4945.0
0.084	4947.7	0.126	4945.7	0.082	4945.6	0.146	4948.5	0.104	4944.9	0.143	4947.1
0.085	4949.2	0.126	4950.9	0.082	4947.6	0.146	4948.4	0.107	4943.9	0.143	4947.5
0.085	4950.7	0.126	4950.6	0.082	4949.6	0.146	4950.8	0.111	4949.3	0.143	4950.6
0.085	4952.3	0.126	4951.8	0.082	4951.2	0.146	4951.4	0.114	4947.3	0.144	4951.2
0.085	4954.3	0.126	4953.7	0.082	4952.6	0.146	4956.0	0.118	4951.0	0.144	4953.7
0.085	4956.3	0.126	4953.8	0.082	4954.5	0.146	4955.7	0.122	4948.3	0.144	4953.4
0.085	4957.9	0.127	4959.2	0.082	4956.3	0.146	4957.2	0.126	4955.8	0.144	4958.0
0.085	4959.4	0.127	4958.9	0.082	4957.5	0.146	4958.7	0.130	4949.4	0.144	4958.2
0.085	4961.1	0.127	4960.0	0.082	4958.8	0.146	4959.9	0.134	4992.5	0.144	4960.5
0.085	4962.4	0.127	4962.3	0.082	4960.3	0.147	4962.9	0.134	4981.0	0.144	4960.5
0.085	4963.7	0.127	4962.6	0.082	4962.9	0.147	4963.4	0.134	4969.7	0.144	4965.7
0.085	4964.9	0.127	4967.3	0.082	4965.7	0.147	4965.3	0.135	4966.9	0.144	4965.5
0.085	4967.6	0.127	4967.5	0.082	4967.1	0.147	4965.5	0.135	4965.4	0.145	4967.2
0.085	4970.6	0.127	4968.6	0.082	4967.9	0.147	4970.8	0.135	4968.3	0.145	4968.0
0.085	4971.8	0.127	4970.5	0.082	4969.6	0.147	4970.3	0.135	4969.5	0.145	4972.3
0.085	4972.9	0.127	4971.1	0.082	4971.0	0.147	4972.4	0.135	4971.8	0.145	4972.1
0.085	4974.6	0.128	4975.8	0.082	4972.5	0.147	4973.6	0.136	4972.5	0.145	4973.5
0.085	4975.9	0.128	4976.2	0.082	4974.0	0.147	4976.4	0.136	4974.3	0.145	4975.1
0.085	4977.4	0.128	4976.6	0.082	4975.8	0.147	4977.9	0.136	4975.7	0.145	4977.4
0.085	4978.9	0.128	4978.7	0.082	4977.7	0.148	4978.7	0.136	4977.9	0.145	4979.2
0.085	4980.8	0.128	4979.5	0.082	4979.6	0.148	4980.5	0.136	4979.9	0.145	4980.2
0.085	4982.7	0.128	4984.0	0.082	4981.3	0.148	4980.4	0.136	4979.7	0.146	4981.8
0.085	4984.2	0.128	4984.2	0.082	4982.9	0.148	4984.8	0.136	4984.4	0.146	4983.3
0.085	4986.1	0.128	4984.9	0.082	4984.7	0.148	4985.1	0.137	4984.0	0.146	4986.1
0.085	4987.2	0.128	4986.9	0.082	4986.0	0.148	4987.0	0.137	4985.8	0.146	4986.7
0.085	4987.8	0.128	4987.8	0.082	4987.3	0.148	4987.4	0.137	4985.8	0.146	4988.8
0.085	4992.1	0.128	4991.9	0.082	4988.4	0.148	4992.8	0.137	4990.2	0.146	4989.8
0.085	4993.2	0.129	4992.6	0.082	4990.8	0.148	4992.1	0.137	4990.5	0.146	4992.8
0.085	4994.0	0.129	4993.2	0.082	4993.9	0.149	4993.9	0.137	4992.6	0.146	4993.5
0.086	4993.9	0.129	4995.3	0.082	4995.6	0.149	4995.4	0.137	4992.3	0.147	4995.4
0.086	4987.2	0.129	4996.1	0.082	4996.2	0.149	4997.5	0.137	4996.6	0.147	4996.1
0.089	4989.1	0.129	5000.6	0.082	4998.0	0.149	4999.5	0.137	4996.8	0.147	4999.4
0.092	4989.5	0.129	5001.1	0.082	4999.5	0.149	5000.5	0.138	4999.3	0.147	4999.9
0.095	4996.1	0.129	5001.5	0.082	5001.0	0.149	5002.1	0.138	4999.5	0.147	5001.8

0.099	4999.3	0.129	5003.6	0.082	5002.5	0.149	5002.2	0.138	5004.5	0.147	5002.6
0.103	5003.2	0.129	5004.5	0.082	5004.1	0.149	5006.6	0.138	5004.3	0.147	5006.0
0.108	5003.6	0.129	5009.3	0.083	5006.2	0.149	5007.0	0.138	5006.2	0.147	5006.5
0.112	5005.1	0.129	5009.0	0.083	5008.0	0.150	5008.8	0.138	5007.6	0.147	5008.3
0.117	5020.0	0.130	5010.0	0.083	5009.7	0.150	5008.8	0.138	5008.9	0.148	5009.8
0.120	5022.4	0.130	5012.3	0.083	5010.9	0.150	5013.8	0.138	5011.8	0.148	5012.6
0.123	5018.8	0.130	5012.2	0.083	5012.8	0.150	5013.1	0.138	5012.1	0.148	5013.5
0.126	5031.2	0.130	5017.2	0.083	5014.2	0.150	5015.7	0.139	5014.1	0.148	5015.4
0.127	5035.1	0.130	5017.2	0.083	5015.7	0.150	5016.2	0.139	5014.4	0.148	5017.1
0.128	5028.9	0.130	5018.7	0.083	5016.9	0.150	5020.8	0.139	5019.5	0.148	5019.1
0.128	5024.0	0.130	5020.4	0.083	5018.8	0.150	5020.5	0.139	5019.1	0.148	5020.4
0.128	5024.1	0.130	5020.1	0.083	5022.0	0.150	5022.6	0.139	5021.0	0.148	5021.5
0.128	5023.6	0.130	5025.0	0.083	5024.0	0.151	5023.6	0.139	5022.7	0.149	5024.9
0.129	5027.3	0.130	5025.4	0.083	5024.9	0.151	5026.9	0.139	5022.8	0.149	5025.6
0.129	5028.1	0.131	5027.2	0.083	5026.4	0.151	5027.8	0.139	5026.3	0.149	5026.8
0.129	5029.5	0.131	5029.0	0.083	5028.1	0.151	5028.8	0.139	5027.0	0.149	5028.1
0.129	5030.8	0.131	5029.5	0.083	5029.4	0.151	5030.6	0.139	5029.2	0.149	5032.4
0.129	5032.9	0.131	5032.6	0.083	5030.9	0.151	5032.9	0.140	5030.1	0.149	5031.9
0.129	5033.4	0.131	5033.4	0.083	5032.5	0.151	5034.5	0.140	5034.1	0.149	5033.9
0.130	5036.4	0.131	5035.7	0.083	5034.1	0.151	5035.6	0.140	5034.8	0.149	5034.4
0.130	5038.3	0.131	5036.7	0.083	5036.1	0.151	5037.5	0.140	5035.4	0.150	5039.1
0.130	5038.2	0.131	5040.0	0.083	5037.9	0.152	5038.5	0.140	5037.7	0.150	5038.4
0.130	5043.1	0.131	5041.4	0.083	5039.4	0.152	5041.1	0.140	5037.7	0.150	5040.5
0.130	5042.3	0.131	5041.8	0.083	5041.2	0.152	5042.1	0.140	5042.2	0.150	5040.3
0.130	5044.3	0.132	5043.7	0.083	5042.8	0.152	5043.8	0.140	5042.3	0.150	5045.0
0.130	5044.1	0.132	5043.7	0.083	5044.2	0.152	5044.5	0.140	5044.4	0.150	5044.7
0.130	5048.5	0.132	5049.1	0.083	5045.4	0.152	5047.8	0.140	5045.9	0.150	5046.9
0.131	5048.5	0.132	5048.8	0.083	5046.9	0.152	5048.3	0.141	5047.6	0.150	5047.1
0.131	5051.4	0.132	5050.1	0.083	5049.7	0.152	5050.6	0.141	5049.9	0.151	5050.6
0.131	5050.9	0.132	5052.0	0.083	5052.4	0.152	5051.4	0.141	5050.3	0.151	5051.7
0.131	5055.7	0.132	5052.6	0.083	5053.7	0.153	5054.5	0.141	5052.3	0.151	5053.7
0.131	5055.5	0.132	5056.3	0.083	5054.5	0.153	5055.4	0.141	5052.7	0.151	5055.2
0.131	5058.0	0.132	5056.5	0.083	5056.3	0.153	5057.7	0.141	5057.8	0.151	5057.4
0.131	5058.8	0.132	5058.9	0.083	5057.7	0.153	5058.6	0.141	5057.8	0.151	5059.0
0.131	5061.9	0.133	5059.4	0.083	5059.2	0.153	5061.2	0.141	5059.0	0.151	5059.9
0.131	5063.5	0.133	5063.9	0.083	5060.9	0.153	5062.3	0.141	5061.1	0.151	5064.4
0.131	5063.9	0.133	5064.1	0.083	5062.6	0.153	5063.8	0.141	5061.2	0.152	5063.7
0.132	5066.0	0.133	5065.2	0.083	5064.5	0.153	5065.4	0.142	5064.9	0.152	5065.5
0.132	5066.0	0.133	5067.0	0.083	5066.3	0.154	5067.9	0.142	5065.4	0.152	5065.3
0.132	5071.2	0.133	5067.1	0.084	5067.8	0.154	5068.7	0.142	5067.8	0.152	5070.0
0.132	5070.8	0.133	5071.3	0.084	5069.6	0.154	5070.3	0.142	5068.5	0.152	5069.6
0.132	5072.9	0.133	5071.8	0.084	5071.2	0.154	5073.0	0.142	5072.7	0.152	5071.9
0.132	5074.5	0.133	5073.8	0.084	5072.4	0.154	5074.3	0.142	5073.0	0.152	5072.1
0.132	5074.9	0.133	5074.5	0.084	5073.6	0.154	5075.7	0.142	5074.2	0.152	5075.6
0.132	5078.3	0.134	5079.1	0.084	5075.4	0.154	5077.0	0.142	5075.8	0.153	5076.8
0.132	5078.8	0.134	5078.7	0.084	5078.8	0.154	5080.6	0.142	5076.0	0.153	5078.4
0.132	5081.2	0.134	5080.2	0.084	5080.2	0.155	5080.8	0.143	5079.9	0.153	5081.7
0.133	5082.1	0.134	5082.2	0.084	5081.6	0.155	5082.6	0.143	5080.2	0.153	5082.1
0.133	5084.5	0.134	5082.4	0.084	5082.7	0.155	5082.7	0.143	5082.4	0.153	5083.7
0.133	5086.6	0.134	5086.1	0.084	5083.9	0.155	5087.7	0.143	5083.0	0.153	5084.3
0.133	5086.7	0.134	5086.9	0.084	5086.1	0.155	5086.7	0.143	5088.1	0.153	5088.7
0.133	5089.0	0.134	5088.8	0.084	5086.9	0.155	5088.9	0.143	5087.5	0.153	5087.9
0.133	5090.5	0.134	5089.0	0.084	5088.2	0.155	5088.7	0.143	5089.2	0.154	5090.5
0.133	5093.5	0.135	5094.3	0.087	5012.5	0.155	5093.2	0.143	5091.1	0.154	5090.3
0.133	5095.0	0.135	5094.1	0.094	5038.9	0.156	5093.1	0.143	5092.6	0.154	5094.1
0.133	5095.3	0.135	5095.8	0.104	5061.6	0.156	5095.5	0.143	5095.0	0.154	5095.2
0.133	5097.8	0.135	5097.2	0.115	5081.1	0.156	5095.8	0.144	5095.5	0.154	5096.6

0.134	5098.7	0.135	5099.3	0.126	5094.6	0.156	5099.6	0.144	5097.6	0.154	5099.9
0.134	5102.6	0.135	5101.0	0.133	5202.4	0.156	5100.3	0.144	5097.4	0.154	5100.5
0.134	5103.4	0.135	5101.7	0.134	5147.5	0.156	5102.2	0.144	5102.0	0.154	5102.1
0.134	5103.9	0.135	5103.8	0.134	5119.5	0.156	5104.8	0.144	5102.1	0.155	5102.2
0.134	5105.8	0.135	5103.6	0.135	5110.9	0.156	5106.2	0.144	5104.1	0.155	5106.8
0.134	5106.5	0.136	5108.0	0.135	5107.3	0.157	5107.6	0.144	5104.6	0.155	5106.5
0.134	5111.0	0.136	5108.3	0.135	5108.5	0.157	5108.0	0.144	5109.5	0.155	5109.0
0.134	5111.8	0.136	5110.5	0.135	5109.4	0.157	5112.8	0.144	5109.0	0.155	5109.4
0.134	5112.1	0.136	5111.0	0.135	5113.7	0.157	5111.9	0.145	5110.9	0.155	5112.5
0.134	5114.2	0.136	5115.7	0.136	5112.8	0.157	5114.0	0.145	5112.1	0.155	5113.7
0.134	5114.9	0.136	5115.8	0.136	5113.9	0.157	5113.5	0.145	5115.0	0.155	5114.3
0.135	5119.6	0.136	5117.4	0.136	5118.1	0.157	5117.8	0.145	5116.4	0.156	5119.1
0.135	5120.0	0.136	5118.9	0.136	5117.6	0.157	5118.3	0.145	5117.6	0.156	5118.1
0.135	5120.4	0.136	5121.0	0.136	5119.4	0.158	5120.1	0.145	5119.0	0.156	5119.9
0.135	5122.8	0.137	5122.8	0.136	5120.0	0.158	5122.0	0.145	5120.3	0.156	5120.0
0.135	5123.3	0.137	5123.7	0.136	5123.6	0.158	5124.6	0.145	5123.5	0.156	5124.5
0.135	5127.8	0.137	5125.7	0.136	5124.7	0.158	5125.8	0.145	5123.9	0.156	5125.1
0.135	5128.4	0.137	5125.3	0.137	5126.1	0.158	5126.5	0.146	5125.7	0.156	5126.9
0.135	5129.1	0.137	5129.4	0.137	5129.2	0.158	5131.2	0.146	5126.2	0.157	5130.4
0.135	5130.9	0.137	5129.8	0.137	5130.0	0.158	5130.3	0.146	5129.7	0.157	5130.4
0.135	5131.1	0.137	5131.9	0.137	5131.3	0.158	5132.4	0.146	5130.0	0.157	5132.2
0.136	5136.4	0.137	5131.9	0.137	5132.8	0.159	5132.1	0.146	5132.3	0.157	5131.7
0.136	5136.4	0.137	5137.2	0.137	5134.8	0.159	5136.3	0.146	5132.3	0.157	5136.4
0.136	5137.1	0.137	5136.7	0.137	5136.7	0.159	5137.0	0.146	5136.4	0.157	5136.5
0.136	5139.3	0.138	5138.9	0.137	5137.7	0.159	5138.4	0.146	5136.9	0.157	5138.4
0.136	5139.3	0.138	5139.8	0.138	5139.3	0.159	5141.4	0.147	5138.8	0.157	5141.5
0.136	5144.2	0.138	5144.3	0.138	5139.3	0.159	5142.4	0.147	5138.9	0.158	5141.7
0.136	5144.2	0.138	5144.0	0.138	5143.7	0.159	5144.0	0.147	5143.6	0.158	5143.8
0.136	5145.8	0.138	5145.9	0.138	5144.1	0.159	5143.8	0.147	5143.8	0.158	5143.3
0.136	5147.7	0.138	5147.3	0.138	5146.3	0.160	5148.6	0.147	5145.8	0.158	5147.9
0.136	5147.5	0.138	5149.6	0.138	5147.1	0.160	5148.2	0.147	5145.7	0.158	5148.2
0.136	5151.7	0.138	5151.0	0.138	5151.2	0.160	5150.8	0.147	5150.1	0.158	5149.9
0.137	5152.5	0.139	5152.2	0.138	5151.7	0.160	5152.1	0.147	5150.2	0.158	5153.1
0.137	5154.7	0.139	5153.9	0.138	5152.4	0.160	5154.3	0.147	5152.8	0.159	5153.8
0.137	5156.0	0.139	5154.6	0.138	5154.7	0.160	5156.1	0.148	5152.4	0.159	5155.3
0.137	5156.6	0.139	5157.7	0.139	5154.4	0.160	5156.1	0.148	5156.5	0.159	5154.9
0.137	5160.2	0.139	5158.1	0.139	5159.2	0.161	5160.9	0.148	5156.9	0.159	5159.3
0.137	5160.7	0.139	5160.4	0.139	5159.3	0.161	5160.0	0.148	5159.2	0.159	5159.8
0.137	5162.8	0.139	5160.5	0.139	5161.5	0.161	5161.9	0.148	5158.8	0.159	5161.8
0.137	5163.8	0.139	5164.5	0.139	5162.9	0.161	5162.9	0.148	5163.4	0.159	5165.1
0.137	5167.3	0.139	5164.8	0.139	5163.2	0.161	5165.9	0.148	5163.7	0.159	5165.3
0.137	5168.4	0.140	5167.3	0.139	5166.9	0.161	5167.7	0.148	5166.0	0.160	5167.0
0.138	5168.8	0.140	5166.9	0.139	5167.3	0.161	5168.3	0.149	5166.3	0.160	5166.7
0.138	5171.1	0.140	5171.9	0.139	5169.5	0.161	5172.7	0.149	5169.9	0.160	5171.5
0.138	5171.2	0.140	5171.8	0.139	5170.9	0.162	5171.8	0.149	5170.8	0.160	5171.9
0.138	5176.1	0.140	5174.1	0.140	5172.9	0.162	5174.1	0.149	5172.9	0.160	5173.6
0.138	5176.2	0.140	5173.8	0.140	5175.1	0.162	5174.4	0.149	5173.7	0.160	5177.7
0.138	5177.7	0.140	5178.9	0.140	5175.4	0.162	5177.6	0.149	5176.5	0.160	5176.6
0.138	5179.1	0.140	5178.5	0.140	5177.8	0.162	5178.9	0.149	5177.7	0.161	5178.9
0.138	5179.0	0.140	5180.4	0.140	5178.7	0.162	5179.8	0.149	5179.1	0.161	5178.5
0.138	5183.7	0.141	5180.9	0.140	5182.8	0.162	5184.2	0.150	5181.9	0.161	5182.3
0.138	5183.9	0.141	5185.8	0.140	5183.5	0.163	5183.1	0.150	5182.8	0.161	5183.9
0.139	5186.1	0.141	5185.1	0.140	5184.2	0.163	5185.7	0.150	5184.1	0.161	5184.3
0.139	5187.3	0.141	5187.1	0.140	5186.2	0.163	5186.3	0.150	5185.4	0.161	5189.3
0.139	5190.2	0.141	5187.9	0.140	5186.4	0.163	5189.3	0.150	5189.4	0.161	5188.3
0.139	5191.7	0.141	5192.3	0.140	5191.7	0.163	5191.2	0.150	5189.2	0.162	5190.3
0.139	5192.1	0.141	5192.2	0.141	5191.3	0.163	5191.0	0.150	5191.2	0.162	5191.7

0.139	5194.3	0.141	5194.0	0.141	5192.4	0.163	5195.8	0.150	5191.4	0.162	5193.9
0.139	5194.4	0.141	5194.7	0.141	5194.5	0.163	5195.3	0.150	5196.2	0.162	5195.8
0.139	5199.2	0.142	5199.3	0.141	5194.4	0.164	5197.4	0.151	5195.8	0.162	5195.4
0.139	5199.1	0.142	5199.1	0.141	5198.8	0.164	5199.2	0.151	5197.7	0.162	5199.9
0.140	5201.3	0.142	5200.5	0.141	5199.0	0.164	5200.7	0.151	5197.2	0.162	5200.3
0.140	5202.3	0.142	5201.7	0.141	5201.1	0.164	5202.4	0.151	5202.1	0.162	5201.8
0.140	5203.5	0.142	5205.8	0.141	5202.9	0.164	5202.2	0.151	5202.1	0.163	5205.4
0.140	5206.7	0.142	5205.6	0.141	5203.1	0.164	5206.7	0.151	5204.2	0.163	5204.9
0.140	5207.0	0.142	5207.2	0.141	5206.8	0.164	5206.7	0.151	5204.9	0.163	5206.6
0.140	5209.1	0.142	5208.5	0.142	5207.5	0.165	5208.6	0.151	5207.8	0.163	5206.8
0.140	5209.5	0.143	5211.7	0.142	5209.7	0.165	5211.9	0.152	5208.7	0.163	5210.5
0.140	5214.8	0.143	5212.4	0.142	5210.7	0.165	5212.3	0.152	5210.8	0.163	5212.2
0.140	5214.2	0.143	5213.8	0.142	5213.4	0.165	5214.0	0.152	5213.4	0.163	5212.6
0.140	5216.1	0.143	5215.2	0.142	5215.4	0.165	5214.0	0.152	5214.6	0.164	5217.2
0.141	5217.8	0.143	5218.2	0.142	5215.7	0.165	5217.9	0.152	5216.1	0.164	5216.7
0.141	5218.8	0.143	5219.4	0.142	5217.9	0.165	5219.1	0.152	5216.3	0.164	5218.6
0.141	5221.6	0.143	5220.4	0.142	5218.2	0.166	5219.8	0.152	5221.4	0.164	5221.6
0.141	5222.1	0.143	5222.0	0.142	5223.2	0.166	5224.0	0.152	5220.5	0.164	5222.0
0.141	5224.5	0.143	5225.1	0.142	5222.8	0.166	5223.1	0.153	5222.6	0.164	5223.6
0.141	5224.3	0.144	5225.8	0.143	5224.0	0.166	5225.4	0.153	5222.5	0.164	5223.4
0.141	5229.4	0.144	5227.3	0.143	5226.4	0.166	5227.0	0.153	5226.6	0.165	5227.4
0.141	5229.2	0.144	5228.5	0.143	5226.0	0.166	5229.2	0.153	5227.2	0.165	5228.4
0.141	5231.1	0.144	5231.4	0.143	5230.1	0.166	5230.7	0.153	5229.2	0.165	5229.4
0.141	5232.4	0.144	5232.4	0.143	5230.8	0.167	5230.3	0.153	5231.5	0.165	5233.8
0.142	5235.0	0.144	5233.9	0.143	5233.0	0.167	5234.9	0.153	5232.8	0.165	5233.2
0.142	5236.6	0.144	5234.8	0.143	5233.8	0.167	5235.5	0.153	5234.5	0.165	5235.1
0.142	5237.2	0.144	5238.3	0.143	5236.7	0.167	5236.8	0.154	5234.8	0.165	5238.3
0.142	5239.4	0.144	5239.3	0.143	5238.8	0.167	5240.9	0.154	5239.6	0.166	5238.6
0.142	5239.4	0.145	5240.4	0.143	5238.9	0.167	5240.4	0.154	5239.0	0.166	5240.6
0.142	5243.7	0.145	5241.8	0.144	5241.2	0.167	5241.8	0.154	5240.8	0.166	5240.6
0.142	5243.8	0.145	5245.8	0.144	5241.3	0.168	5243.5	0.154	5240.9	0.166	5243.9
0.142	5246.2	0.145	5245.6	0.144	5246.2	0.168	5245.9	0.154	5244.9	0.166	5245.6
0.142	5246.6	0.145	5247.3	0.144	5246.0	0.168	5247.3	0.154	5245.7	0.166	5245.4
0.143	5251.6	0.145	5248.5	0.144	5248.0	0.168	5247.0	0.155	5247.3	0.166	5249.7
0.143	5251.0	0.145	5252.5	0.144	5249.4	0.168	5251.3	0.155	5250.5	0.167	5249.8
0.143	5252.5	0.145	5252.3	0.144	5251.3	0.168	5252.0	0.155	5250.9	0.167	5251.7
0.143	5254.2	0.146	5254.2	0.144	5253.5	0.168	5253.7	0.155	5252.7	0.167	5255.7
0.143	5256.0	0.146	5254.6	0.144	5253.9	0.169	5257.9	0.155	5252.1	0.167	5255.1
0.143	5258.2	0.146	5259.2	0.145	5255.9	0.169	5257.1	0.155	5257.1	0.167	5256.9
0.143	5258.7	0.146	5258.7	0.145	5255.8	0.169	5258.8	0.155	5256.9	0.167	5258.7
0.143	5261.0	0.146	5260.5	0.145	5260.9	0.169	5261.3	0.155	5259.1	0.167	5260.4
0.143	5260.7	0.146	5260.8	0.145	5260.9	0.169	5262.1	0.156	5260.5	0.168	5262.4
0.144	5265.2	0.146	5265.8	0.145	5262.9	0.169	5263.8	0.156	5263.0	0.168	5261.6
0.144	5265.4	0.146	5264.8	0.145	5264.0	0.169	5263.7	0.156	5264.7	0.168	5265.7
0.144	5267.7	0.147	5267.5	0.145	5267.4	0.170	5267.1	0.156	5265.1	0.168	5267.1
0.144	5267.9	0.147	5267.2	0.145	5268.3	0.170	5268.9	0.156	5269.7	0.168	5266.9
0.144	5273.1	0.147	5272.0	0.145	5269.3	0.170	5268.9	0.156	5268.8	0.168	5271.8
0.144	5272.8	0.147	5271.6	0.145	5271.2	0.170	5273.4	0.156	5270.6	0.168	5271.6
0.144	5274.5	0.147	5273.8	0.146	5271.2	0.170	5273.7	0.157	5271.1	0.169	5273.2
0.144	5275.4	0.147	5273.6	0.146	5275.2	0.170	5275.3	0.157	5274.8	0.169	5277.6
0.144	5279.3	0.147	5278.5	0.146	5275.9	0.170	5279.7	0.157	5275.9	0.169	5276.4
0.145	5279.8	0.147	5278.3	0.146	5277.7	0.171	5278.8	0.157	5276.6	0.169	5278.9
0.145	5280.9	0.147	5280.4	0.146	5277.7	0.171	5280.6	0.157	5281.3	0.169	5281.0
0.145	5282.7	0.148	5280.3	0.146	5283.0	0.171	5283.2	0.157	5280.2	0.169	5282.1
0.145	5283.7	0.148	5284.4	0.146	5282.5	0.171	5283.8	0.157	5282.7	0.169	5283.7
0.145	5286.7	0.148	5284.8	0.146	5284.4	0.171	5285.6	0.157	5282.3	0.170	5283.8
0.145	5287.2	0.148	5287.1	0.146	5285.6	0.171	5285.4	0.158	5286.4	0.170	5287.2

0.145	5289.2	0.148	5287.2	0.147	5289.1	0.171	5289.1	0.158	5287.8	0.170	5288.8
0.145	5289.0	0.148	5290.9	0.147	5289.9	0.172	5290.9	0.158	5288.6	0.170	5288.3
0.145	5293.5	0.148	5291.7	0.147	5291.0	0.172	5290.6	0.158	5293.3	0.170	5292.2
0.146	5293.6	0.148	5293.9	0.147	5293.0	0.172	5295.3	0.158	5292.3	0.170	5293.6
0.146	5296.2	0.149	5294.8	0.147	5293.7	0.172	5295.2	0.158	5294.0	0.170	5294.2
0.146	5296.0	0.149	5297.7	0.147	5296.8	0.172	5297.0	0.158	5294.3	0.171	5298.7
0.146	5300.7	0.149	5298.5	0.147	5297.5	0.172	5301.0	0.159	5297.8	0.171	5298.5
0.146	5300.4	0.149	5300.6	0.147	5299.4	0.172	5300.1	0.159	5299.3	0.171	5300.0
0.146	5302.9	0.149	5302.7	0.147	5299.3	0.173	5302.4	0.159	5300.2	0.171	5304.5
0.146	5302.9	0.149	5303.9	0.148	5303.7	0.173	5305.9	0.159	5304.7	0.171	5303.3
0.146	5307.6	0.149	5305.4	0.148	5304.0	0.173	5305.5	0.159	5303.9	0.171	5305.0
0.146	5307.3	0.149	5306.9	0.148	5306.0	0.173	5307.2	0.159	5305.9	0.172	5308.6
0.147	5309.6	0.150	5310.3	0.148	5306.0	0.173	5308.8	0.159	5306.8	0.172	5308.0
0.147	5309.9	0.150	5310.6	0.148	5310.7	0.173	5310.6	0.159	5309.6	0.172	5310.2
0.147	5314.6	0.150	5312.5	0.148	5310.3	0.173	5312.3	0.160	5311.0	0.172	5311.7
0.147	5314.5	0.150	5312.9	0.148	5313.0	0.174	5312.2	0.160	5311.4	0.172	5313.6
0.147	5316.0	0.150	5317.6	0.148	5313.3	0.174	5315.9	0.160	5315.8	0.172	5315.4
0.147	5317.0	0.150	5317.2	0.148	5318.1	0.174	5317.7	0.160	5315.0	0.172	5315.4
0.147	5321.1	0.150	5319.0	0.149	5317.8	0.174	5317.1	0.160	5317.5	0.173	5319.0
0.147	5321.4	0.150	5319.0	0.149	5320.0	0.174	5321.6	0.160	5319.6	0.173	5320.4
0.147	5322.9	0.151	5323.6	0.149	5320.3	0.174	5322.5	0.160	5321.0	0.173	5320.2
0.148	5324.3	0.151	5323.3	0.149	5325.0	0.174	5322.4	0.161	5323.0	0.173	5323.8
0.148	5326.9	0.151	5325.6	0.149	5324.7	0.175	5327.2	0.161	5322.2	0.173	5325.4
0.148	5328.1	0.151	5325.3	0.149	5326.3	0.175	5326.6	0.161	5327.0	0.173	5325.1
0.148	5329.3	0.151	5329.6	0.149	5327.3	0.175	5328.2	0.161	5327.4	0.173	5329.5
0.148	5330.7	0.151	5329.9	0.149	5331.5	0.175	5332.8	0.161	5329.1	0.174	5330.4
0.148	5332.7	0.151	5331.9	0.150	5331.1	0.175	5331.8	0.161	5332.9	0.174	5330.7
0.148	5335.0	0.151	5332.6	0.150	5333.1	0.175	5333.9	0.161	5332.4	0.174	5335.4
0.148	5336.0	0.152	5336.0	0.150	5334.2	0.176	5337.6	0.162	5334.5	0.174	5335.2
0.148	5337.4	0.152	5336.8	0.150	5337.2	0.176	5336.8	0.162	5334.5	0.174	5336.4
0.149	5338.8	0.152	5338.6	0.150	5338.0	0.176	5338.8	0.162	5338.1	0.174	5340.8
0.149	5341.5	0.152	5342.0	0.150	5339.6	0.176	5341.8	0.162	5339.4	0.175	5339.8
0.149	5342.3	0.152	5342.4	0.150	5340.9	0.176	5342.2	0.162	5339.4	0.175	5341.7
0.149	5344.5	0.152	5344.1	0.150	5343.9	0.176	5343.8	0.162	5344.1	0.175	5345.5
0.149	5345.3	0.152	5344.6	0.150	5344.9	0.176	5345.6	0.162	5343.5	0.175	5344.9
0.149	5348.3	0.152	5349.1	0.151	5346.1	0.177	5347.0	0.162	5345.8	0.175	5346.4
0.149	5349.1	0.153	5348.5	0.151	5347.6	0.177	5349.2	0.163	5348.7	0.175	5350.1
0.149	5351.0	0.153	5350.7	0.151	5350.9	0.177	5349.3	0.163	5349.4	0.175	5349.6
0.150	5351.4	0.153	5350.1	0.151	5351.5	0.177	5352.3	0.163	5351.1	0.176	5351.8
0.150	5354.9	0.153	5354.8	0.151	5352.9	0.177	5354.1	0.163	5350.7	0.176	5355.2
0.150	5355.6	0.153	5354.8	0.151	5354.2	0.177	5353.9	0.163	5354.9	0.176	5355.1
0.150	5357.4	0.153	5356.8	0.151	5357.8	0.177	5357.7	0.163	5355.9	0.176	5357.2
0.150	5358.1	0.153	5357.7	0.151	5358.2	0.178	5359.0	0.163	5356.6	0.176	5359.9
0.150	5361.4	0.153	5360.8	0.151	5359.9	0.178	5358.8	0.164	5361.1	0.176	5360.2
0.150	5361.9	0.154	5362.0	0.152	5360.4	0.178	5362.5	0.164	5360.4	0.177	5361.8
0.150	5364.3	0.154	5363.6	0.152	5364.3	0.178	5364.2	0.164	5362.2	0.177	5364.2
0.150	5364.5	0.154	5366.8	0.152	5364.7	0.178	5363.5	0.164	5364.7	0.177	5365.3
0.151	5368.1	0.154	5367.2	0.152	5366.1	0.178	5367.6	0.164	5365.8	0.177	5366.7
0.151	5368.9	0.154	5369.0	0.152	5367.2	0.179	5369.1	0.164	5367.8	0.177	5368.4
0.151	5371.3	0.154	5368.8	0.152	5371.7	0.179	5368.6	0.164	5367.3	0.177	5370.1
0.151	5371.2	0.154	5373.9	0.152	5371.0	0.179	5373.2	0.165	5371.4	0.177	5372.3
0.151	5375.1	0.154	5373.2	0.152	5373.0	0.179	5374.1	0.165	5372.8	0.178	5373.1
0.151	5375.6	0.155	5375.3	0.153	5373.6	0.179	5373.8	0.165	5372.9	0.178	5375.3
0.151	5377.7	0.155	5375.3	0.153	5377.9	0.179	5378.0	0.165	5377.8	0.178	5377.0
0.151	5378.2	0.155	5379.2	0.153	5377.6	0.180	5379.2	0.165	5377.1	0.178	5378.2
0.152	5381.6	0.155	5379.9	0.153	5379.7	0.180	5378.7	0.165	5379.0	0.178	5380.2
0.152	5382.2	0.155	5382.1	0.153	5379.4	0.180	5382.8	0.165	5382.5	0.178	5381.9

0.152	5384.3	0.155	5384.4	0.153	5384.5	0.180	5384.1	0.166	5382.1	0.179	5383.5
0.152	5385.2	0.155	5385.7	0.153	5383.7	0.180	5383.6	0.166	5384.2	0.179	5385.0
0.152	5388.0	0.155	5387.7	0.153	5386.0	0.180	5388.2	0.166	5384.5	0.179	5386.9
0.152	5388.9	0.156	5387.7	0.154	5385.9	0.180	5388.8	0.166	5387.9	0.179	5388.3
0.152	5391.0	0.156	5392.6	0.154	5390.5	0.181	5389.0	0.166	5389.8	0.179	5390.3
0.152	5391.9	0.156	5391.9	0.154	5390.4	0.181	5393.1	0.166	5389.1	0.179	5392.1
0.152	5395.0	0.156	5393.9	0.154	5392.9	0.181	5394.2	0.166	5393.9	0.180	5393.4
0.153	5395.8	0.156	5394.0	0.154	5392.6	0.181	5394.0	0.167	5394.0	0.180	5395.3
0.153	5397.9	0.156	5397.5	0.154	5397.0	0.181	5398.2	0.167	5395.3	0.180	5397.1
0.153	5399.5	0.156	5398.5	0.154	5397.5	0.181	5399.4	0.167	5399.7	0.180	5399.3
0.153	5401.6	0.156	5400.4	0.154	5399.5	0.182	5398.8	0.167	5398.4	0.180	5399.7
0.153	5402.9	0.157	5403.2	0.155	5400.8	0.182	5403.0	0.167	5400.9	0.180	5402.0
0.153	5404.6	0.157	5403.8	0.155	5403.5	0.182	5403.8	0.167	5403.2	0.180	5404.4
0.153	5406.8	0.157	5405.6	0.155	5404.3	0.182	5403.9	0.167	5403.8	0.181	5405.1
0.153	5408.1	0.157	5405.5	0.155	5405.6	0.182	5407.8	0.168	5406.0	0.181	5407.0
0.154	5409.6	0.157	5410.7	0.155	5409.2	0.182	5409.1	0.168	5405.9	0.181	5410.3
0.154	5410.4	0.157	5410.0	0.155	5409.5	0.182	5408.7	0.168	5409.5	0.181	5410.2
0.154	5414.0	0.157	5412.1	0.155	5411.2	0.183	5413.0	0.168	5411.0	0.181	5411.8
0.154	5414.6	0.157	5412.9	0.155	5411.8	0.183	5414.4	0.168	5410.7	0.181	5415.9
0.154	5416.0	0.158	5415.9	0.156	5416.3	0.183	5413.7	0.168	5414.8	0.182	5415.0
0.154	5417.1	0.158	5417.3	0.156	5416.0	0.183	5417.8	0.168	5415.9	0.182	5416.8
0.154	5421.5	0.158	5418.6	0.156	5418.0	0.183	5419.0	0.169	5416.4	0.182	5420.7
0.154	5421.0	0.158	5422.5	0.156	5417.6	0.183	5418.8	0.169	5420.6	0.182	5420.0
0.155	5422.9	0.158	5421.9	0.156	5422.5	0.184	5422.1	0.169	5420.4	0.182	5421.4
0.155	5423.5	0.158	5423.9	0.156	5422.1	0.184	5424.1	0.169	5422.0	0.182	5425.9
0.155	5427.9	0.158	5423.5	0.156	5424.3	0.184	5424.0	0.169	5426.4	0.183	5424.7
0.155	5427.4	0.159	5428.1	0.156	5424.8	0.184	5427.5	0.169	5425.4	0.183	5426.2
0.155	5429.5	0.159	5428.0	0.157	5428.2	0.184	5429.0	0.170	5427.6	0.183	5430.2
0.155	5429.1	0.159	5430.5	0.157	5429.1	0.184	5429.8	0.170	5430.1	0.183	5430.2
0.155	5434.1	0.159	5432.6	0.157	5430.9	0.185	5432.3	0.170	5430.7	0.183	5430.6
0.155	5433.4	0.159	5433.9	0.157	5433.4	0.185	5434.1	0.170	5433.0	0.183	5434.7
0.155	5435.9	0.159	5435.9	0.157	5434.8	0.185	5436.3	0.170	5433.5	0.183	5435.7
0.156	5435.7	0.159	5435.8	0.157	5436.5	0.185	5436.9	0.170	5436.1	0.184	5434.9
0.156	5440.2	0.159	5440.5	0.157	5436.8	0.185	5439.1	0.170	5437.8	0.184	5439.2
0.156	5440.2	0.160	5440.0	0.157	5441.6	0.185	5441.8	0.171	5437.0	0.184	5440.2
0.156	5442.8	0.160	5442.0	0.158	5440.9	0.186	5441.7	0.171	5441.4	0.184	5439.9
0.156	5442.7	0.160	5442.6	0.158	5443.1	0.186	5443.7	0.171	5442.5	0.184	5443.6
0.156	5446.7	0.160	5445.9	0.158	5442.8	0.186	5447.5	0.171	5442.3	0.184	5445.7
0.156	5447.4	0.160	5447.1	0.158	5446.9	0.186	5447.0	0.171	5446.8	0.185	5446.0
0.156	5449.3	0.160	5448.0	0.158	5447.3	0.186	5448.6	0.171	5447.3	0.185	5448.7
0.157	5451.2	0.160	5452.5	0.158	5449.7	0.186	5453.1	0.171	5448.4	0.185	5450.5
0.157	5453.5	0.160	5451.7	0.158	5450.6	0.187	5452.3	0.172	5452.6	0.185	5452.9
0.157	5454.4	0.161	5454.0	0.158	5453.1	0.187	5453.0	0.172	5452.4	0.185	5453.2
0.157	5455.5	0.161	5453.8	0.159	5454.7	0.187	5456.9	0.172	5453.4	0.185	5455.2
0.157	5459.6	0.161	5457.9	0.159	5455.5	0.187	5457.1	0.172	5458.1	0.186	5459.0
0.157	5459.1	0.161	5458.8	0.159	5459.9	0.187	5456.9	0.172	5456.9	0.186	5457.9
0.157	5461.3	0.161	5460.0	0.159	5459.3	0.187	5461.7	0.172	5459.0	0.186	5459.9
0.157	5461.4	0.161	5464.3	0.159	5461.2	0.187	5462.4	0.173	5462.8	0.186	5463.9
0.158	5466.1	0.161	5463.4	0.159	5460.9	0.188	5462.1	0.173	5461.9	0.186	5463.5
0.158	5465.7	0.162	5465.4	0.159	5465.4	0.188	5465.7	0.173	5464.0	0.186	5464.0
0.158	5467.8	0.162	5465.3	0.159	5465.7	0.188	5467.6	0.173	5466.9	0.187	5468.6
0.158	5467.4	0.162	5469.4	0.160	5468.0	0.188	5467.9	0.173	5467.3	0.187	5468.9
0.158	5472.6	0.162	5470.1	0.160	5469.1	0.188	5470.4	0.173	5469.2	0.187	5468.5
0.158	5472.2	0.162	5472.0	0.160	5471.5	0.188	5472.1	0.173	5471.2	0.187	5472.0
0.158	5474.5	0.162	5475.5	0.160	5473.2	0.189	5475.0	0.174	5472.8	0.187	5473.8
0.158	5474.8	0.162	5475.4	0.160	5473.8	0.189	5475.3	0.174	5474.3	0.187	5474.2
0.159	5478.1	0.162	5477.4	0.160	5478.4	0.189	5477.0	0.174	5475.7	0.188	5476.7

0.159	5479.2	0.163	5476.9	0.160	5477.3	0.189	5481.0	0.174	5477.5	0.188	5478.6
0.159	5481.0	0.163	5481.5	0.160	5479.1	0.189	5480.1	0.174	5479.5	0.188	5481.5
0.159	5483.4	0.163	5481.9	0.161	5479.2	0.189	5481.4	0.174	5479.5	0.188	5481.8
0.159	5484.7	0.163	5483.4	0.161	5483.4	0.190	5485.6	0.174	5482.6	0.188	5483.3
0.159	5486.3	0.163	5487.7	0.161	5483.8	0.190	5485.8	0.175	5484.3	0.188	5487.8
0.159	5486.7	0.163	5486.8	0.161	5486.3	0.190	5485.3	0.175	5483.9	0.189	5486.9
0.159	5491.4	0.163	5488.9	0.161	5488.6	0.190	5489.6	0.175	5487.9	0.189	5487.2
0.160	5490.9	0.164	5488.5	0.161	5489.7	0.190	5490.6	0.175	5489.4	0.189	5490.8
0.160	5492.8	0.164	5492.3	0.161	5491.5	0.190	5491.0	0.175	5489.3	0.189	5492.2
0.160	5492.5	0.164	5493.7	0.161	5491.1	0.191	5493.3	0.175	5492.7	0.189	5491.5
0.160	5497.2	0.164	5494.8	0.162	5496.3	0.191	5495.4	0.176	5494.5	0.189	5495.4
0.160	5496.9	0.164	5499.2	0.162	5495.8	0.191	5498.0	0.176	5494.1	0.190	5496.8
0.160	5499.6	0.164	5498.6	0.162	5497.8	0.191	5498.4	0.176	5497.9	0.190	5499.6
0.160	5499.7	0.164	5500.4	0.162	5498.4	0.191	5500.1	0.176	5499.4	0.190	5499.8
0.160	5503.1	0.165	5500.9	0.162	5501.4	0.191	5504.5	0.176	5498.6	0.190	5501.8
0.161	5504.7	0.165	5504.2	0.162	5502.4	0.192	5503.7	0.176	5502.9	0.190	5505.5
0.161	5505.6	0.165	5505.8	0.162	5503.8	0.192	5504.3	0.176	5504.3	0.191	5505.4
0.161	5509.4	0.165	5506.0	0.163	5508.0	0.192	5507.7	0.177	5504.0	0.191	5505.1
0.161	5509.4	0.165	5510.0	0.163	5507.5	0.192	5509.1	0.177	5507.6	0.191	5509.4
0.161	5511.0	0.165	5509.7	0.163	5509.7	0.192	5508.8	0.177	5509.7	0.191	5510.2
0.161	5511.3	0.165	5511.7	0.163	5509.2	0.193	5512.2	0.177	5509.1	0.191	5510.4
0.161	5516.2	0.165	5513.3	0.163	5513.7	0.193	5514.2	0.177	5512.6	0.191	5513.5
0.161	5515.3	0.166	5515.7	0.163	5514.3	0.193	5516.4	0.177	5514.5	0.192	5515.5
0.162	5517.8	0.166	5517.2	0.163	5515.7	0.193	5517.1	0.178	5513.9	0.192	5518.7
0.162	5517.9	0.166	5516.8	0.163	5520.0	0.193	5518.7	0.178	5517.6	0.192	5518.5
0.162	5521.5	0.166	5521.5	0.164	5519.1	0.193	5522.6	0.178	5519.1	0.192	5519.4
0.162	5522.6	0.166	5521.7	0.164	5521.3	0.194	5522.2	0.178	5519.0	0.192	5523.6
0.162	5524.2	0.166	5523.6	0.164	5520.8	0.194	5522.3	0.178	5522.5	0.192	5523.4
0.162	5527.4	0.166	5527.3	0.164	5524.9	0.194	5526.4	0.178	5524.4	0.193	5523.4
0.162	5527.7	0.167	5526.8	0.164	5525.5	0.194	5527.6	0.179	5524.4	0.193	5526.5
0.162	5529.2	0.167	5529.0	0.164	5527.6	0.194	5527.8	0.179	5527.6	0.193	5528.8
0.163	5529.6	0.167	5529.1	0.164	5530.6	0.194	5530.4	0.179	5529.5	0.193	5530.7
0.163	5534.3	0.167	5532.7	0.165	5531.5	0.195	5532.1	0.179	5529.7	0.193	5531.8
0.163	5533.4	0.167	5534.0	0.165	5533.0	0.195	5536.1	0.179	5532.4	0.193	5533.3
0.163	5536.0	0.167	5534.3	0.165	5532.6	0.195	5535.4	0.179	5534.1	0.194	5537.5
0.163	5536.0	0.167	5539.3	0.165	5537.4	0.195	5536.2	0.180	5535.1	0.194	5537.1
0.163	5539.9	0.168	5538.2	0.165	5537.6	0.195	5540.2	0.180	5537.1	0.194	5536.8
0.163	5541.0	0.168	5540.6	0.165	5539.3	0.195	5541.0	0.180	5539.5	0.194	5540.3
0.164	5542.6	0.168	5543.2	0.165	5542.4	0.196	5540.7	0.180	5540.9	0.194	5542.1
0.164	5546.0	0.168	5543.9	0.165	5542.8	0.196	5543.8	0.180	5542.5	0.195	5543.8
0.164	5546.3	0.168	5545.9	0.166	5544.6	0.196	5545.3	0.180	5544.5	0.195	5545.0
0.164	5547.8	0.168	5545.3	0.166	5543.9	0.196	5549.1	0.180	5547.0	0.195	5546.2
0.164	5547.5	0.168	5549.4	0.166	5548.9	0.196	5548.6	0.181	5547.7	0.195	5550.7
0.164	5552.1	0.169	5550.3	0.166	5549.1	0.196	5549.6	0.181	5549.3	0.195	5550.0
0.164	5551.9	0.169	5551.2	0.166	5550.9	0.197	5553.5	0.181	5552.8	0.195	5550.3
0.164	5554.5	0.169	5555.6	0.166	5554.5	0.197	5554.2	0.181	5552.0	0.196	5553.8
0.165	5555.0	0.169	5554.5	0.166	5554.6	0.197	5553.8	0.181	5554.0	0.196	5555.6
0.165	5558.3	0.169	5557.4	0.167	5556.5	0.197	5557.1	0.181	5557.5	0.196	5558.1
0.165	5559.7	0.169	5559.3	0.167	5556.2	0.197	5558.8	0.182	5557.1	0.196	5558.2
0.165	5560.2	0.169	5560.7	0.167	5560.0	0.198	5562.4	0.182	5558.4	0.196	5559.2
0.165	5564.9	0.170	5562.5	0.167	5561.1	0.198	5561.7	0.182	5563.0	0.196	5563.6
0.165	5564.1	0.170	5561.8	0.167	5562.1	0.198	5562.7	0.182	5562.1	0.197	5563.5
0.165	5566.1	0.170	5566.4	0.167	5566.3	0.198	5566.6	0.182	5563.1	0.197	5563.9
0.165	5565.8	0.170	5567.2	0.167	5565.9	0.198	5567.6	0.182	5567.5	0.197	5566.6
0.166	5569.9	0.170	5567.9	0.167	5567.4	0.198	5567.9	0.183	5567.8	0.197	5568.9
0.166	5570.6	0.170	5572.4	0.168	5567.5	0.199	5570.4	0.183	5567.3	0.197	5572.3
0.166	5572.7	0.170	5571.6	0.168	5571.2	0.199	5572.0	0.183	5571.3	0.198	5572.1

0.166	5575.8	0.170	5573.9	0.168	5572.8	0.199	5576.1	0.183	5572.7	0.198	5571.5
0.166	5576.0	0.171	5576.3	0.168	5573.8	0.199	5575.5	0.183	5572.0	0.198	5575.4
0.166	5578.0	0.171	5577.0	0.168	5578.2	0.199	5575.1	0.183	5576.0	0.198	5576.9
0.166	5577.4	0.171	5578.7	0.168	5577.6	0.200	5578.8	0.184	5577.5	0.198	5579.5
0.167	5582.4	0.171	5578.5	0.168	5579.7	0.200	5580.6	0.184	5578.3	0.198	5579.8
0.167	5582.3	0.171	5582.9	0.169	5581.3	0.200	5583.3	0.184	5580.7	0.199	5581.2
0.167	5584.2	0.171	5583.9	0.169	5583.3	0.200	5583.9	0.184	5583.0	0.199	5585.0
0.167	5586.2	0.171	5584.1	0.169	5584.6	0.200	5584.6	0.184	5585.5	0.199	5585.7
0.167	5587.9	0.172	5588.6	0.169	5584.4	0.200	5588.4	0.184	5586.1	0.199	5586.2
0.167	5589.7	0.172	5588.5	0.169	5588.8	0.201	5589.4	0.185	5587.1	0.199	5588.3
0.167	5589.4	0.172	5590.3	0.169	5588.8	0.201	5589.9	0.185	5591.2	0.200	5589.7
0.167	5594.0	0.172	5594.2	0.169	5591.1	0.201	5591.8	0.185	5590.5	0.200	5593.4
0.168	5593.9	0.172	5593.3	0.170	5594.2	0.201	5593.3	0.185	5591.7	0.200	5593.8
0.168	5595.6	0.172	5595.3	0.170	5594.3	0.201	5597.6	0.185	5595.8	0.200	5593.3
0.168	5596.9	0.173	5597.2	0.170	5596.3	0.202	5597.1	0.185	5595.8	0.200	5596.6
0.168	5599.8	0.173	5599.0	0.170	5596.1	0.202	5597.3	0.186	5596.1	0.200	5598.5
0.168	5601.2	0.173	5600.4	0.170	5600.1	0.202	5600.3	0.186	5599.9	0.201	5602.7
0.168	5601.3	0.173	5600.2	0.170	5601.3	0.202	5602.5	0.186	5601.3	0.201	5602.2
0.168	5606.2	0.173	5604.2	0.170	5601.9	0.202	5606.2	0.186	5601.4	0.201	5601.9
0.169	5605.3	0.173	5605.8	0.171	5606.2	0.202	5605.8	0.186	5604.2	0.201	5604.7
0.169	5607.7	0.173	5605.6	0.171	5605.4	0.203	5605.3	0.186	5605.8	0.201	5606.8
0.169	5609.0	0.174	5610.0	0.171	5607.8	0.203	5608.9	0.187	5608.5	0.202	5610.8
0.169	5611.5	0.174	5610.4	0.171	5610.3	0.203	5610.5	0.187	5608.5	0.202	5610.5
0.169	5613.3	0.174	5611.4	0.171	5611.1	0.203	5613.9	0.187	5610.7	0.202	5610.0
0.169	5613.1	0.174	5615.8	0.171	5612.9	0.203	5613.7	0.187	5614.4	0.202	5613.3
0.169	5617.8	0.174	5614.7	0.171	5612.3	0.204	5613.9	0.187	5614.3	0.202	5615.2
0.169	5616.9	0.174	5616.9	0.172	5617.0	0.204	5617.6	0.187	5614.8	0.203	5619.2
0.170	5619.0	0.174	5620.0	0.172	5617.9	0.204	5619.0	0.188	5619.0	0.203	5618.9
0.170	5620.6	0.175	5620.3	0.172	5618.6	0.204	5622.5	0.188	5619.3	0.203	5618.6
0.170	5622.7	0.175	5622.3	0.172	5623.1	0.204	5621.8	0.188	5619.2	0.203	5621.7
0.170	5624.6	0.175	5622.7	0.172	5622.3	0.205	5622.1	0.188	5622.3	0.203	5623.2
0.170	5624.6	0.175	5625.8	0.172	5624.4	0.205	5625.6	0.188	5624.3	0.203	5627.3
0.170	5629.0	0.175	5627.7	0.172	5626.9	0.205	5627.3	0.188	5626.2	0.204	5626.9
0.170	5628.8	0.175	5626.9	0.172	5627.9	0.205	5630.5	0.189	5626.9	0.204	5627.0
0.171	5631.0	0.175	5631.1	0.173	5629.7	0.205	5630.3	0.189	5628.8	0.204	5629.9
0.171	5633.5	0.176	5632.2	0.173	5628.9	0.205	5630.6	0.189	5633.0	0.204	5631.8
0.171	5634.5	0.176	5632.1	0.173	5633.4	0.206	5634.5	0.189	5632.0	0.204	5635.5
0.171	5636.1	0.176	5636.3	0.173	5634.4	0.206	5635.6	0.189	5632.8	0.205	5635.7
0.171	5635.5	0.176	5636.7	0.173	5634.9	0.206	5639.5	0.189	5636.1	0.205	5636.3
0.171	5640.0	0.176	5638.0	0.173	5639.7	0.206	5638.9	0.190	5637.3	0.205	5637.8
0.171	5640.5	0.176	5642.3	0.173	5639.1	0.206	5638.6	0.190	5637.7	0.205	5639.1
0.171	5642.6	0.176	5641.9	0.174	5641.3	0.207	5641.9	0.190	5640.5	0.205	5642.9
0.172	5646.1	0.177	5643.7	0.174	5644.9	0.207	5643.7	0.190	5642.0	0.206	5643.8
0.172	5645.8	0.177	5647.9	0.174	5644.2	0.207	5647.6	0.190	5645.5	0.206	5646.2
0.172	5647.9	0.177	5647.0	0.174	5646.0	0.207	5647.5	0.190	5645.6	0.206	5646.8
0.172	5647.6	0.177	5648.8	0.174	5647.0	0.207	5647.3	0.191	5646.7	0.206	5646.9
0.172	5651.6	0.177	5652.1	0.174	5649.7	0.208	5650.0	0.191	5650.5	0.206	5650.5
0.172	5652.7	0.177	5651.8	0.174	5651.2	0.208	5651.8	0.191	5651.5	0.207	5651.7
0.172	5653.9	0.178	5653.7	0.175	5650.7	0.208	5655.4	0.191	5651.3	0.207	5655.8
0.173	5658.1	0.178	5655.0	0.175	5655.0	0.208	5655.9	0.191	5654.3	0.207	5655.3
0.173	5656.9	0.178	5657.0	0.175	5656.1	0.208	5656.4	0.192	5655.6	0.207	5655.0
0.173	5659.5	0.178	5658.8	0.175	5656.9	0.209	5658.7	0.192	5659.1	0.207	5658.2
0.173	5660.6	0.178	5658.8	0.175	5661.3	0.209	5659.4	0.192	5658.5	0.208	5659.6
0.173	5663.0	0.178	5662.4	0.175	5661.1	0.209	5662.9	0.192	5659.7	0.208	5663.7
0.173	5664.9	0.178	5663.8	0.176	5662.4	0.209	5664.4	0.192	5664.2	0.208	5664.0
0.173	5664.3	0.179	5663.6	0.176	5666.4	0.209	5667.1	0.192	5664.6	0.208	5666.4
0.174	5669.1	0.179	5667.5	0.176	5665.9	0.209	5667.4	0.193	5664.2	0.208	5666.7

0.174	5669.1	0.179	5669.1	0.176	5667.8	0.210	5666.8	0.193	5667.7	0.209	5666.9
0.174	5671.0	0.179	5668.5	0.176	5669.3	0.210	5670.4	0.193	5669.5	0.209	5670.1
0.174	5674.9	0.179	5672.7	0.176	5671.1	0.210	5671.7	0.193	5673.2	0.209	5671.7
0.174	5674.1	0.179	5674.0	0.176	5673.0	0.210	5676.1	0.193	5672.5	0.209	5675.9
0.174	5676.2	0.179	5673.7	0.177	5672.5	0.210	5675.8	0.193	5672.8	0.209	5675.6
0.174	5676.0	0.180	5678.4	0.177	5676.5	0.211	5676.7	0.194	5676.3	0.210	5676.7
0.175	5679.9	0.180	5678.5	0.177	5678.2	0.211	5678.4	0.194	5677.6	0.210	5678.2
0.175	5681.4	0.180	5679.6	0.177	5677.9	0.211	5679.4	0.194	5678.1	0.210	5678.7
0.175	5681.1	0.180	5683.9	0.177	5682.6	0.211	5682.6	0.194	5680.8	0.210	5681.9
0.175	5686.0	0.180	5683.5	0.177	5682.6	0.211	5683.6	0.194	5682.1	0.210	5683.4
0.175	5685.2	0.180	5685.1	0.177	5683.6	0.212	5687.3	0.195	5686.5	0.211	5687.5
0.175	5687.5	0.181	5689.1	0.178	5688.2	0.212	5687.1	0.195	5686.2	0.211	5686.9
0.175	5690.8	0.181	5688.5	0.178	5687.1	0.212	5687.3	0.195	5685.7	0.211	5687.9
0.176	5690.9	0.181	5689.8	0.178	5689.3	0.212	5690.3	0.195	5689.1	0.211	5690.0
0.176	5692.9	0.181	5694.3	0.178	5692.5	0.212	5691.5	0.195	5690.9	0.211	5690.8
0.176	5692.7	0.181	5693.0	0.178	5692.4	0.213	5695.5	0.195	5693.9	0.212	5693.8
0.176	5696.6	0.181	5695.1	0.178	5694.4	0.213	5695.9	0.196	5694.0	0.212	5695.1
0.176	5698.0	0.181	5699.4	0.178	5696.1	0.213	5698.9	0.196	5694.4	0.212	5699.2
0.176	5698.0	0.182	5698.3	0.179	5697.9	0.213	5698.8	0.196	5698.6	0.212	5698.6
0.176	5702.7	0.182	5700.4	0.179	5699.6	0.213	5698.5	0.196	5699.5	0.212	5699.8
0.177	5702.0	0.182	5703.9	0.179	5700.0	0.214	5701.8	0.196	5701.2	0.213	5701.4
0.177	5703.8	0.182	5703.5	0.179	5702.9	0.214	5702.7	0.197	5702.2	0.213	5702.0
0.177	5707.6	0.182	5705.4	0.179	5705.0	0.214	5707.0	0.197	5703.5	0.213	5705.5
0.177	5707.4	0.182	5709.1	0.179	5704.1	0.214	5707.2	0.197	5707.3	0.213	5706.9
0.177	5709.8	0.183	5708.7	0.179	5708.1	0.214	5711.1	0.197	5707.7	0.213	5710.7
0.177	5709.6	0.183	5710.2	0.180	5709.8	0.215	5710.9	0.197	5707.4	0.214	5710.5
0.177	5713.0	0.183	5713.9	0.180	5709.3	0.215	5711.0	0.197	5710.6	0.214	5713.1
0.178	5714.6	0.183	5713.4	0.180	5713.7	0.215	5713.4	0.198	5712.4	0.214	5713.5
0.178	5714.0	0.183	5715.3	0.180	5714.0	0.215	5714.1	0.198	5716.5	0.214	5713.5
0.178	5718.8	0.183	5718.5	0.180	5715.2	0.215	5717.9	0.198	5716.2	0.214	5716.8
0.178	5719.3	0.183	5718.7	0.180	5719.6	0.216	5718.8	0.198	5715.9	0.215	5717.5
0.178	5720.2	0.184	5720.3	0.181	5719.1	0.216	5723.0	0.198	5719.0	0.215	5721.1
0.178	5724.6	0.184	5723.6	0.181	5720.7	0.216	5722.8	0.199	5720.7	0.215	5722.1
0.178	5723.4	0.184	5723.5	0.181	5724.9	0.216	5724.0	0.199	5724.9	0.215	5725.7
0.179	5725.9	0.184	5725.5	0.181	5724.1	0.217	5725.7	0.199	5723.9	0.215	5725.6
0.179	5728.3	0.184	5729.0	0.181	5725.6	0.217	5725.2	0.199	5723.8	0.216	5727.6
0.179	5729.5	0.184	5728.2	0.181	5729.9	0.217	5728.4	0.199	5727.1	0.216	5728.5
0.179	5731.2	0.185	5730.2	0.181	5729.2	0.217	5729.7	0.200	5729.2	0.216	5728.3
0.179	5731.0	0.185	5733.6	0.182	5730.9	0.217	5733.1	0.200	5733.2	0.216	5731.7
0.179	5734.8	0.185	5733.4	0.182	5734.2	0.218	5734.1	0.200	5732.9	0.216	5732.5
0.179	5736.4	0.185	5735.2	0.182	5734.0	0.218	5737.8	0.200	5732.3	0.217	5735.5
0.180	5735.9	0.185	5739.1	0.182	5736.3	0.218	5737.8	0.200	5735.8	0.217	5737.0
0.180	5739.8	0.185	5738.6	0.182	5738.5	0.218	5739.0	0.200	5737.5	0.217	5740.1
0.180	5740.7	0.186	5740.3	0.182	5739.4	0.218	5740.2	0.201	5741.2	0.217	5740.2
0.180	5741.8	0.186	5744.5	0.183	5741.1	0.219	5740.3	0.201	5740.6	0.218	5743.4
0.180	5746.0	0.186	5743.2	0.183	5742.8	0.219	5743.0	0.201	5740.6	0.218	5743.8
0.180	5745.4	0.186	5745.1	0.183	5744.1	0.219	5744.6	0.201	5744.1	0.218	5744.8
0.180	5747.5	0.186	5749.0	0.183	5746.0	0.219	5747.9	0.201	5745.6	0.218	5746.7
0.181	5751.1	0.186	5748.4	0.183	5747.4	0.219	5749.0	0.202	5749.9	0.218	5747.1
0.181	5750.8	0.186	5749.8	0.183	5749.0	0.220	5752.9	0.202	5749.2	0.219	5750.0
0.181	5752.6	0.187	5754.5	0.183	5751.1	0.220	5752.6	0.202	5749.8	0.219	5750.6
0.181	5754.5	0.187	5753.5	0.184	5751.9	0.220	5755.5	0.202	5752.1	0.219	5753.9
0.181	5755.9	0.187	5754.8	0.184	5754.8	0.220	5755.7	0.202	5753.8	0.219	5754.8
0.181	5757.8	0.187	5759.1	0.184	5756.6	0.221	5756.2	0.203	5757.1	0.219	5758.1
0.181	5757.5	0.187	5759.0	0.184	5757.1	0.221	5758.4	0.203	5757.7	0.220	5758.9
0.182	5761.1	0.187	5759.4	0.184	5759.9	0.221	5758.8	0.203	5758.9	0.220	5762.3
0.182	5762.7	0.188	5763.3	0.184	5761.5	0.221	5761.9	0.203	5760.6	0.220	5762.6

0.182	5762.1	0.188	5764.0	0.185	5761.7	0.221	5763.3	0.203	5761.5	0.220	5765.0
0.182	5766.6	0.188	5763.6	0.185	5764.4	0.222	5766.2	0.204	5764.9	0.221	5765.4
0.182	5767.0	0.188	5767.5	0.185	5766.4	0.222	5767.4	0.204	5766.4	0.221	5766.3
0.182	5768.4	0.188	5768.6	0.185	5766.2	0.222	5770.6	0.204	5769.1	0.221	5768.1
0.182	5772.7	0.188	5768.7	0.185	5769.3	0.222	5770.8	0.204	5769.3	0.221	5768.3
0.183	5772.1	0.189	5772.2	0.185	5771.1	0.222	5773.7	0.204	5768.6	0.221	5771.3
0.183	5774.1	0.189	5774.2	0.185	5771.0	0.223	5773.9	0.205	5772.3	0.222	5772.2
0.183	5778.5	0.189	5773.7	0.186	5774.7	0.223	5775.9	0.205	5773.9	0.222	5775.1
0.183	5777.5	0.189	5777.2	0.186	5776.3	0.223	5777.3	0.205	5777.9	0.222	5776.4
0.183	5779.2	0.189	5779.2	0.186	5776.7	0.223	5777.9	0.205	5777.9	0.222	5779.0
0.183	5782.7	0.189	5780.0	0.186	5779.6	0.224	5780.3	0.205	5778.9	0.222	5780.3
0.183	5782.3	0.190	5782.1	0.186	5781.7	0.224	5780.3	0.206	5780.8	0.223	5783.4
0.184	5784.1	0.190	5784.0	0.186	5782.1	0.224	5783.4	0.206	5781.1	0.223	5783.7
0.184	5786.2	0.190	5786.7	0.187	5784.5	0.224	5784.2	0.206	5784.7	0.223	5787.3
0.184	5787.6	0.190	5786.7	0.187	5786.1	0.224	5787.3	0.206	5785.7	0.223	5787.4
0.184	5789.6	0.190	5788.8	0.187	5786.7	0.225	5788.5	0.206	5789.4	0.224	5790.5
0.184	5790.0	0.190	5792.2	0.187	5789.4	0.225	5791.9	0.206	5789.4	0.224	5790.8
0.184	5793.3	0.191	5792.0	0.187	5791.1	0.225	5792.3	0.207	5788.9	0.224	5792.7
0.185	5794.9	0.191	5793.2	0.187	5792.7	0.225	5796.1	0.207	5792.1	0.224	5793.9
0.185	5794.1	0.191	5797.8	0.188	5794.2	0.226	5795.7	0.207	5793.5	0.225	5794.8
0.185	5798.3	0.191	5796.9	0.188	5796.5	0.226	5799.2	0.207	5797.2	0.225	5796.3
0.185	5799.6	0.191	5797.6	0.188	5798.1	0.226	5799.0	0.207	5797.4	0.225	5797.8
0.185	5799.2	0.191	5801.4	0.188	5799.5	0.226	5801.6	0.208	5801.0	0.225	5800.0
0.185	5803.2	0.192	5802.3	0.188	5801.3	0.226	5802.6	0.208	5800.8	0.225	5800.5
0.185	5804.3	0.192	5801.7	0.188	5804.2	0.227	5804.3	0.208	5800.6	0.226	5803.4
0.186	5804.5	0.192	5805.7	0.188	5804.2	0.227	5805.7	0.208	5803.5	0.226	5803.5
0.186	5808.8	0.192	5807.2	0.189	5805.8	0.227	5807.0	0.208	5805.2	0.226	5806.4
0.186	5809.2	0.192	5807.3	0.189	5809.4	0.227	5808.6	0.209	5808.9	0.226	5806.7
0.186	5810.1	0.192	5810.6	0.189	5809.0	0.228	5809.2	0.209	5809.4	0.227	5809.8
0.186	5814.6	0.193	5812.3	0.189	5811.0	0.228	5811.7	0.209	5812.7	0.227	5810.5
0.186	5814.1	0.193	5815.0	0.189	5814.9	0.228	5812.2	0.209	5812.5	0.227	5813.8
0.187	5815.3	0.193	5815.3	0.189	5814.2	0.228	5815.0	0.210	5812.5	0.227	5814.0
0.187	5819.7	0.193	5816.9	0.190	5815.7	0.228	5815.4	0.210	5815.4	0.227	5817.2
0.187	5819.0	0.193	5820.8	0.190	5820.2	0.229	5818.1	0.210	5816.1	0.228	5817.6
0.187	5820.5	0.193	5820.3	0.190	5819.0	0.229	5818.8	0.210	5820.0	0.228	5820.2
0.187	5824.3	0.194	5820.4	0.190	5820.3	0.229	5821.6	0.210	5821.0	0.228	5821.0
0.187	5823.8	0.194	5824.9	0.190	5824.1	0.229	5822.2	0.211	5824.7	0.228	5824.1
0.187	5825.4	0.194	5825.5	0.190	5824.1	0.230	5825.4	0.211	5824.8	0.229	5824.5
0.188	5829.7	0.194	5825.1	0.191	5824.5	0.230	5826.1	0.211	5825.5	0.229	5827.8
0.188	5829.0	0.194	5829.0	0.191	5828.7	0.230	5828.9	0.211	5827.0	0.229	5828.0
0.188	5830.8	0.194	5830.9	0.191	5829.7	0.230	5829.8	0.211	5826.9	0.229	5830.3
0.188	5835.1	0.195	5832.1	0.191	5829.1	0.231	5832.4	0.212	5830.6	0.230	5831.1
0.188	5834.0	0.195	5833.7	0.191	5833.5	0.231	5832.9	0.212	5832.1	0.230	5833.8
0.188	5835.9	0.195	5835.1	0.191	5834.9	0.231	5835.6	0.212	5836.0	0.230	5834.6
0.189	5839.6	0.195	5839.3	0.192	5834.7	0.231	5836.5	0.212	5836.3	0.230	5837.7
0.189	5838.9	0.195	5838.4	0.192	5837.6	0.231	5839.3	0.212	5839.5	0.230	5838.1
0.189	5840.4	0.195	5839.3	0.192	5839.8	0.232	5840.4	0.213	5839.6	0.231	5840.7
0.189	5844.3	0.196	5843.2	0.192	5840.6	0.232	5843.4	0.213	5840.1	0.231	5841.1
0.189	5843.9	0.196	5843.9	0.192	5842.6	0.232	5843.4	0.213	5842.1	0.231	5843.5
0.189	5845.8	0.196	5843.3	0.192	5844.2	0.232	5846.4	0.213	5842.4	0.231	5843.9
0.189	5849.6	0.196	5847.0	0.193	5847.2	0.233	5846.5	0.213	5845.5	0.232	5846.8
0.190	5848.8	0.196	5848.9	0.193	5847.3	0.233	5849.1	0.214	5847.3	0.232	5847.5
0.190	5851.0	0.196	5851.4	0.193	5849.2	0.233	5849.9	0.214	5850.6	0.232	5850.0
0.190	5854.7	0.197	5851.8	0.193	5853.3	0.233	5853.1	0.214	5851.1	0.232	5850.7
0.190	5854.0	0.197	5853.4	0.193	5852.5	0.234	5853.1	0.214	5854.9	0.233	5853.4
0.190	5855.8	0.197	5857.4	0.193	5853.4	0.234	5856.2	0.214	5854.4	0.233	5853.3
0.190	5859.9	0.197	5857.0	0.194	5857.4	0.234	5856.3	0.215	5856.4	0.233	5856.4

0.191	5858.6	0.197	5857.0	0.194	5857.6	0.234	5858.8	0.215	5857.2	0.233	5856.6
0.191	5860.6	0.197	5860.8	0.194	5857.3	0.234	5859.3	0.215	5857.4	0.234	5859.6
0.191	5864.8	0.198	5862.4	0.194	5861.6	0.235	5862.2	0.215	5860.5	0.234	5860.2
0.191	5863.6	0.198	5863.3	0.194	5862.8	0.235	5862.3	0.216	5861.2	0.234	5863.4
0.191	5866.0	0.198	5865.2	0.194	5862.5	0.235	5865.6	0.216	5864.6	0.234	5863.7
0.191	5869.8	0.198	5867.3	0.195	5866.1	0.235	5865.6	0.216	5865.5	0.235	5866.0
0.192	5869.0	0.198	5871.0	0.195	5868.3	0.236	5868.5	0.216	5868.6	0.235	5867.9
0.192	5870.7	0.199	5870.2	0.195	5870.2	0.236	5868.7	0.216	5869.3	0.235	5870.2
0.192	5875.2	0.199	5870.6	0.195	5871.3	0.236	5871.8	0.217	5872.6	0.235	5871.9
0.192	5873.6	0.199	5874.5	0.195	5872.4	0.236	5871.8	0.217	5872.9	0.236	5873.8
0.192	5875.3	0.199	5875.6	0.195	5876.7	0.237	5874.9	0.217	5874.7	0.236	5876.9
0.192	5879.4	0.199	5875.9	0.196	5875.8	0.237	5876.0	0.217	5875.9	0.236	5877.3
0.192	5878.5	0.199	5878.7	0.196	5876.6	0.237	5878.7	0.217	5876.5	0.236	5880.8
0.193	5880.0	0.200	5880.6	0.196	5880.6	0.237	5880.5	0.218	5878.8	0.237	5880.9
0.193	5884.3	0.200	5884.4	0.196	5881.1	0.238	5882.7	0.218	5879.0	0.237	5883.5
0.193	5884.4	0.200	5883.7	0.196	5880.8	0.238	5884.7	0.218	5881.9	0.237	5883.1
0.193	5884.8	0.200	5883.7	0.196	5884.7	0.238	5885.7	0.218	5882.9	0.237	5886.5
0.193	5889.4	0.200	5887.8	0.197	5886.4	0.238	5889.0	0.219	5886.0	0.238	5886.3
0.193	5889.4	0.200	5888.9	0.197	5888.0	0.239	5889.5	0.219	5887.2	0.238	5888.8
0.194	5889.5	0.201	5889.8	0.197	5889.5	0.239	5892.6	0.219	5890.5	0.238	5888.9
0.194	5893.4	0.201	5891.3	0.197	5891.0	0.239	5892.5	0.219	5891.1	0.238	5891.6
0.194	5894.4	0.201	5893.5	0.197	5894.8	0.239	5895.4	0.219	5894.7	0.239	5891.7
0.194	5894.0	0.201	5897.5	0.197	5893.9	0.240	5894.9	0.220	5894.6	0.239	5894.7
0.194	5898.5	0.201	5897.3	0.198	5894.7	0.240	5897.3	0.220	5897.4	0.239	5896.6
0.194	5899.8	0.202	5897.0	0.198	5898.9	0.240	5897.6	0.220	5897.4	0.239	5898.7
0.195	5898.7	0.202	5900.5	0.198	5899.9	0.240	5900.1	0.220	5899.2	0.240	5901.5
0.195	5903.3	0.202	5902.2	0.198	5899.2	0.241	5900.8	0.221	5900.4	0.240	5902.4
0.195	5904.5	0.202	5905.6	0.198	5903.0	0.241	5903.2	0.221	5901.5	0.240	5905.8
0.195	5905.1	0.202	5905.1	0.198	5904.6	0.241	5905.0	0.221	5904.0	0.240	5905.1
0.195	5907.7	0.202	5905.7	0.199	5907.4	0.241	5907.0	0.221	5904.3	0.241	5907.8
0.195	5909.6	0.203	5909.5	0.199	5907.4	0.242	5909.5	0.221	5906.6	0.241	5907.8
0.196	5911.2	0.203	5910.9	0.199	5909.0	0.242	5910.9	0.222	5907.4	0.241	5910.0
0.196	5912.6	0.203	5911.5	0.199	5912.9	0.242	5914.3	0.222	5910.0	0.241	5910.3
0.196	5914.0	0.203	5913.8	0.199	5912.9	0.242	5914.3	0.222	5911.1	0.242	5912.7
0.196	5917.3	0.203	5914.8	0.199	5912.5	0.243	5917.1	0.222	5914.1	0.242	5914.9
0.196	5917.4	0.204	5919.2	0.200	5916.6	0.243	5916.7	0.223	5914.9	0.242	5916.8
0.196	5918.9	0.204	5918.9	0.200	5917.9	0.243	5919.0	0.223	5918.2	0.242	5920.1
0.197	5923.3	0.204	5918.9	0.200	5919.8	0.243	5918.3	0.223	5918.4	0.243	5920.8
0.197	5922.5	0.204	5921.7	0.200	5920.9	0.244	5921.2	0.223	5921.4	0.243	5924.1
0.197	5923.7	0.204	5923.6	0.200	5922.7	0.244	5922.9	0.223	5922.1	0.243	5923.3
0.197	5927.7	0.204	5927.4	0.201	5926.5	0.244	5925.6	0.224	5924.9	0.243	5925.1
0.197	5927.8	0.205	5927.3	0.201	5926.2	0.244	5928.6	0.224	5925.6	0.244	5925.1
0.197	5927.4	0.205	5926.9	0.201	5925.6	0.245	5929.4	0.224	5929.0	0.244	5928.0
0.197	5932.0	0.205	5930.7	0.201	5929.9	0.245	5932.7	0.224	5929.4	0.244	5929.9
0.198	5932.8	0.205	5932.3	0.201	5931.2	0.245	5931.7	0.225	5932.8	0.244	5931.9
0.198	5932.3	0.205	5935.9	0.201	5932.9	0.246	5934.3	0.225	5932.8	0.245	5936.0
0.198	5935.9	0.206	5935.3	0.202	5934.3	0.246	5933.9	0.225	5935.7	0.245	5935.8
0.198	5937.9	0.206	5935.1	0.202	5936.1	0.246	5937.0	0.225	5936.0	0.245	5937.8
0.198	5938.8	0.206	5938.7	0.202	5939.7	0.246	5938.1	0.226	5939.3	0.246	5936.8
0.198	5940.9	0.206	5940.5	0.202	5939.6	0.247	5940.7	0.226	5939.2	0.246	5939.7
0.199	5942.6	0.206	5943.6	0.202	5938.8	0.247	5944.1	0.226	5943.0	0.246	5941.4
0.199	5946.1	0.206	5943.8	0.202	5942.7	0.247	5944.1	0.226	5943.1	0.246	5944.0
0.199	5945.6	0.207	5944.2	0.203	5944.6	0.247	5947.0	0.226	5946.1	0.247	5947.0
0.199	5947.0	0.207	5947.3	0.203	5947.3	0.248	5946.0	0.227	5946.4	0.247	5946.7
0.199	5951.0	0.207	5949.0	0.203	5947.2	0.248	5948.7	0.227	5949.7	0.247	5949.3
0.200	5950.6	0.207	5951.9	0.203	5948.6	0.248	5949.6	0.227	5949.1	0.247	5948.3
0.200	5950.9	0.207	5952.0	0.203	5952.6	0.248	5952.1	0.227	5953.1	0.248	5951.4

0.200	5955.0	0.208	5952.0	0.204	5953.1	0.249	5955.0	0.228	5953.0	0.248	5953.5
0.200	5956.6	0.208	5955.8	0.204	5953.2	0.249	5956.0	0.228	5956.1	0.248	5955.9
0.200	5956.0	0.208	5957.1	0.204	5955.8	0.249	5958.7	0.228	5956.5	0.249	5959.1
0.200	5959.4	0.208	5960.2	0.204	5957.4	0.250	5957.9	0.228	5959.5	0.249	5958.0
0.201	5961.1	0.208	5960.2	0.204	5961.5	0.250	5959.9	0.229	5959.3	0.249	5959.5
0.201	5963.7	0.209	5960.4	0.204	5961.0	0.250	5961.5	0.229	5962.2	0.249	5960.0
0.201	5963.8	0.209	5964.1	0.205	5960.5	0.250	5964.2	0.229	5962.6	0.250	5963.5
0.201	5965.6	0.209	5965.5	0.205	5964.4	0.251	5967.4	0.229	5965.8	0.250	5967.1
0.201	5969.5	0.209	5969.0	0.205	5966.0	0.251	5967.1	0.230	5966.0	0.250	5967.0
0.201	5969.1	0.209	5968.7	0.205	5969.1	0.251	5968.9	0.230	5969.4	0.250	5968.8
0.202	5969.7	0.209	5968.3	0.205	5969.4	0.251	5969.0	0.230	5969.4	0.251	5968.5
0.202	5973.9	0.210	5971.9	0.206	5969.8	0.252	5972.1	0.230	5971.8	0.251	5971.4
0.202	5974.4	0.210	5974.1	0.206	5973.5	0.252	5974.8	0.230	5972.0	0.251	5974.9
0.202	5974.6	0.210	5977.5	0.206	5974.7	0.252	5975.6	0.231	5974.6	0.252	5975.7
0.202	5977.4	0.210	5977.6	0.206	5976.3	0.253	5978.3	0.231	5974.3	0.252	5977.7
0.202	5979.7	0.210	5977.0	0.206	5977.5	0.253	5977.7	0.231	5977.7	0.252	5977.2
0.203	5982.3	0.211	5980.0	0.206	5978.4	0.253	5980.4	0.231	5977.9	0.252	5979.9
0.203	5982.2	0.211	5981.7	0.207	5982.7	0.253	5982.3	0.232	5980.2	0.253	5982.7
0.203	5983.4	0.211	5985.5	0.207	5982.9	0.254	5984.1	0.232	5980.4	0.253	5983.7
0.203	5987.9	0.211	5985.5	0.207	5984.0	0.254	5987.1	0.232	5982.9	0.253	5986.3
0.203	5987.4	0.211	5986.3	0.207	5985.8	0.254	5986.2	0.232	5983.3	0.254	5985.8
0.203	5987.4	0.212	5988.4	0.207	5987.4	0.254	5988.4	0.233	5986.8	0.254	5988.6
0.204	5991.2	0.212	5989.4	0.208	5991.2	0.255	5990.5	0.233	5988.0	0.254	5991.8
0.204	5993.0	0.212	5993.4	0.208	5991.5	0.255	5992.6	0.233	5991.1	0.254	5991.3
0.204	5994.0	0.212	5993.8	0.208	5991.1	0.255	5995.3	0.233	5992.8	0.255	5993.5
0.204	5995.7	0.212	5997.4	0.208	5994.1	0.256	5994.1	0.234	5994.7	0.255	5994.1
0.204	5997.0	0.213	5997.1	0.208	5995.8	0.256	5996.5	0.234	5997.1	0.255	5997.2
0.204	6001.3	0.213	5996.7	0.209	6000.0	0.256	5998.8	0.234	5997.7	0.256	6000.7
0.205	6000.2	0.213	6000.1	0.209	5999.9	0.256	6000.9	0.234	6001.2	0.256	5999.0
0.205	6000.8	0.213	6001.4	0.209	5999.8	0.257	6003.4	0.235	6001.5	0.256	6001.4
0.205	6004.7	0.213	6005.8	0.209	6002.4	0.257	6002.4	0.235	6004.6	0.256	6003.8
0.205	6006.4	0.214	6005.7	0.209	6004.0	0.257	6005.2	0.235	6004.1	0.257	6005.3
0.205	6007.6	0.214	6007.2	0.209	6008.2	0.258	6008.4	0.235	6006.8	0.257	6007.8
0.206	6009.5	0.214	6008.6	0.210	6007.6	0.258	6008.8	0.236	6006.2	0.257	6007.5
0.206	6010.9	0.214	6008.9	0.210	6008.0	0.258	6010.4	0.236	6008.3	0.258	6010.2
0.206	6015.0	0.214	6012.1	0.210	6010.4	0.259	6011.2	0.236	6008.7	0.258	6013.4
0.206	6014.3	0.215	6013.5	0.210	6012.5	0.259	6014.3	0.236	6011.9	0.258	6012.3
0.206	6014.1	0.215	6017.3	0.210	6016.3	0.259	6017.5	0.237	6013.2	0.259	6015.0
0.206	6017.5	0.215	6017.2	0.211	6016.8	0.259	6015.7	0.237	6016.0	0.259	6018.6
0.207	6019.6	0.215	6018.0	0.211	6017.2	0.260	6018.2	0.237	6018.9	0.259	6018.7
0.207	6021.2	0.215	6020.0	0.211	6019.2	0.260	6021.8	0.237	6019.7	0.259	6019.9
0.207	6022.6	0.216	6020.8	0.211	6020.2	0.260	6022.4	0.238	6022.4	0.260	6021.5
0.207	6023.6	0.216	6024.0	0.211	6023.6	0.261	6023.6	0.238	6022.5	0.260	6023.8
0.207	6028.3	0.216	6025.5	0.212	6024.7	0.261	6024.9	0.238	6025.7	0.260	6025.9
0.208	6028.1	0.216	6029.6	0.212	6026.5	0.261	6027.3	0.238	6025.3	0.261	6026.1
0.208	6027.7	0.216	6028.7	0.212	6027.5	0.261	6030.2	0.239	6027.2	0.261	6028.8
0.208	6030.7	0.217	6029.8	0.212	6027.6	0.262	6028.9	0.239	6027.5	0.261	6031.5
0.208	6032.6	0.217	6031.7	0.212	6031.7	0.262	6032.1	0.239	6030.3	0.262	6030.4
0.208	6035.9	0.217	6032.6	0.213	6032.9	0.262	6035.7	0.240	6031.9	0.262	6033.4
0.208	6035.8	0.217	6035.5	0.213	6036.7	0.263	6034.6	0.240	6034.2	0.262	6037.3
0.209	6036.2	0.217	6037.2	0.213	6036.2	0.263	6036.5	0.240	6037.5	0.262	6035.5
0.209	6040.2	0.218	6041.0	0.213	6035.7	0.263	6040.1	0.240	6038.4	0.263	6038.3
0.209	6041.3	0.218	6040.3	0.213	6039.1	0.264	6040.4	0.241	6040.9	0.263	6041.8
0.209	6043.0	0.218	6042.6	0.213	6040.6	0.264	6041.9	0.241	6039.6	0.263	6040.7
0.209	6043.8	0.218	6043.4	0.214	6044.9	0.264	6044.5	0.241	6042.2	0.264	6043.3
0.209	6045.4	0.218	6043.4	0.214	6044.8	0.264	6045.5	0.241	6042.3	0.264	6047.2
0.210	6049.1	0.219	6046.8	0.214	6046.2	0.265	6047.2	0.242	6045.3	0.264	6046.1

0.210	6049.7	0.219	6048.2	0.214	6047.4	0.265	6048.9	0.242	6047.8	0.265	6048.1
0.210	6049.3	0.219	6052.3	0.214	6047.6	0.265	6051.0	0.242	6049.9	0.265	6051.6
0.210	6052.3	0.219	6052.4	0.215	6051.0	0.266	6052.6	0.242	6053.3	0.265	6050.7
0.210	6053.9	0.219	6055.9	0.215	6052.2	0.266	6053.2	0.243	6052.0	0.266	6053.2
0.211	6058.5	0.220	6055.5	0.215	6056.4	0.266	6055.5	0.243	6053.9	0.266	6057.2
0.211	6057.9	0.220	6056.1	0.215	6056.2	0.267	6057.4	0.243	6053.6	0.266	6055.6
0.211	6057.9	0.220	6058.2	0.215	6056.5	0.267	6058.3	0.244	6057.0	0.267	6058.3
0.211	6060.8	0.220	6058.4	0.216	6058.8	0.267	6060.8	0.244	6059.3	0.267	6061.7
0.211	6062.7	0.220	6061.9	0.216	6060.4	0.268	6062.7	0.244	6061.4	0.267	6060.9
0.212	6066.3	0.221	6063.4	0.216	6063.9	0.268	6063.6	0.244	6064.5	0.268	6063.7
0.212	6065.6	0.221	6066.9	0.216	6064.7	0.268	6065.6	0.245	6063.8	0.268	6066.4
0.212	6065.7	0.221	6067.5	0.216	6067.8	0.269	6067.6	0.245	6065.6	0.268	6065.9
0.212	6069.3	0.221	6070.7	0.217	6067.6	0.269	6068.9	0.245	6065.7	0.268	6068.4
0.212	6071.3	0.222	6070.7	0.217	6067.8	0.269	6070.5	0.245	6068.8	0.269	6070.2
0.212	6074.6	0.222	6071.5	0.217	6070.2	0.269	6072.0	0.246	6072.4	0.269	6071.9
0.213	6074.5	0.222	6073.4	0.217	6071.9	0.270	6074.4	0.246	6073.2	0.269	6073.2
0.213	6074.2	0.222	6073.7	0.217	6075.3	0.270	6075.2	0.246	6074.9	0.270	6075.1
0.213	6078.3	0.222	6076.7	0.218	6076.5	0.270	6076.7	0.247	6073.8	0.270	6078.2
0.213	6079.4	0.223	6077.9	0.218	6080.2	0.271	6080.4	0.247	6076.8	0.270	6077.4
0.213	6082.7	0.223	6081.0	0.218	6079.9	0.271	6079.9	0.247	6079.4	0.271	6080.0
0.214	6082.0	0.223	6081.7	0.218	6080.0	0.271	6082.1	0.247	6081.4	0.271	6083.4
0.214	6082.6	0.223	6085.8	0.218	6081.9	0.272	6085.5	0.248	6084.4	0.271	6083.0
0.214	6086.3	0.223	6085.5	0.219	6083.3	0.272	6084.3	0.248	6083.0	0.272	6085.2
0.214	6087.9	0.224	6088.7	0.219	6086.6	0.272	6087.4	0.248	6084.6	0.272	6087.1
0.214	6091.2	0.224	6089.2	0.219	6087.9	0.273	6089.8	0.248	6086.8	0.272	6089.1
0.215	6091.0	0.224	6090.2	0.219	6091.8	0.273	6090.2	0.249	6089.5	0.273	6089.9
0.215	6090.8	0.224	6092.3	0.220	6091.3	0.273	6091.5	0.249	6093.0	0.273	6091.7
0.215	6094.1	0.225	6092.2	0.220	6092.8	0.274	6093.7	0.249	6091.8	0.273	6094.8
0.215	6096.1	0.225	6094.9	0.220	6094.0	0.274	6096.7	0.250	6094.0	0.274	6093.7
0.215	6099.4	0.225	6095.5	0.220	6094.2	0.274	6096.3	0.250	6095.6	0.274	6096.6
0.215	6099.3	0.225	6098.1	0.220	6097.6	0.275	6098.6	0.250	6097.9	0.274	6098.9
0.216	6099.1	0.225	6099.8	0.221	6099.1	0.275	6101.5	0.250	6100.8	0.275	6101.2
0.216	6102.7	0.226	6102.9	0.221	6103.0	0.275	6101.2	0.251	6099.4	0.275	6100.7
0.216	6104.3	0.226	6103.9	0.221	6103.1	0.276	6103.6	0.251	6101.9	0.275	6102.8
0.216	6108.5	0.226	6107.8	0.221	6106.3	0.276	6105.9	0.251	6104.8	0.276	6106.2
0.216	6108.2	0.226	6107.4	0.221	6106.3	0.276	6108.6	0.252	6106.3	0.276	6106.8
0.217	6107.9	0.226	6111.1	0.222	6106.7	0.277	6107.8	0.252	6108.5	0.276	6107.7
0.217	6110.6	0.227	6110.8	0.222	6109.1	0.277	6110.3	0.252	6107.3	0.277	6110.0
0.217	6111.5	0.227	6113.1	0.222	6109.0	0.277	6113.1	0.252	6110.5	0.277	6113.0
0.217	6115.8	0.227	6113.8	0.222	6112.7	0.278	6114.4	0.253	6114.3	0.278	6113.3
0.217	6116.2	0.227	6114.8	0.222	6114.0	0.278	6115.3	0.253	6114.1	0.278	6114.7
0.218	6118.0	0.228	6116.9	0.223	6117.8	0.278	6117.0	0.253	6115.6	0.278	6116.9
0.218	6119.2	0.228	6117.4	0.223	6118.3	0.279	6120.2	0.254	6116.2	0.279	6119.4
0.218	6119.6	0.228	6119.7	0.223	6121.5	0.279	6120.1	0.254	6119.2	0.279	6119.6
0.218	6123.0	0.228	6120.4	0.223	6121.6	0.279	6122.2	0.254	6122.6	0.279	6121.2
0.218	6124.2	0.228	6123.2	0.223	6122.9	0.280	6124.0	0.255	6121.3	0.280	6123.5
0.219	6127.9	0.229	6123.6	0.224	6124.1	0.280	6126.9	0.255	6124.1	0.280	6126.5
0.219	6127.5	0.229	6127.2	0.224	6124.1	0.281	6126.4	0.255	6127.6	0.280	6127.2
0.219	6127.4	0.229	6127.9	0.224	6127.2	0.281	6128.7	0.255	6126.8	0.281	6127.3
0.219	6130.2	0.229	6131.0	0.224	6128.2	0.281	6130.8	0.256	6128.4	0.281	6129.5
0.219	6132.2	0.230	6132.1	0.225	6131.5	0.282	6133.9	0.256	6130.8	0.281	6132.2
0.220	6136.0	0.230	6135.1	0.225	6132.4	0.282	6133.5	0.256	6133.1	0.282	6134.5
0.220	6136.5	0.230	6135.2	0.225	6136.2	0.282	6135.2	0.257	6135.1	0.282	6134.1
0.220	6139.1	0.230	6138.8	0.225	6136.2	0.283	6137.1	0.257	6135.0	0.283	6136.5
0.220	6139.2	0.230	6138.6	0.225	6139.9	0.283	6140.4	0.257	6137.5	0.283	6138.5
0.220	6139.1	0.231	6142.5	0.226	6139.3	0.283	6140.9	0.257	6140.4	0.283	6141.6
0.221	6141.9	0.231	6142.5	0.226	6141.5	0.284	6141.5	0.258	6139.6	0.284	6141.8

0.221	6143.8	0.231	6145.8	0.226	6142.7	0.284	6143.4	0.258	6142.1	0.284	6142.9
0.221	6147.8	0.231	6146.0	0.226	6143.1	0.284	6146.6	0.258	6145.6	0.284	6144.8
0.221	6147.8	0.232	6149.2	0.226	6146.1	0.285	6148.3	0.259	6144.5	0.285	6147.4
0.221	6149.7	0.232	6149.0	0.227	6146.1	0.285	6148.0	0.259	6147.1	0.285	6150.1
0.222	6150.5	0.232	6152.1	0.227	6148.6	0.286	6149.9	0.259	6151.0	0.286	6149.9
0.222	6151.2	0.232	6152.3	0.227	6149.7	0.286	6152.1	0.260	6150.1	0.286	6151.3
0.222	6154.0	0.233	6154.5	0.227	6152.5	0.286	6155.2	0.260	6152.0	0.286	6153.3
0.222	6155.7	0.233	6155.8	0.228	6153.7	0.287	6155.7	0.260	6155.5	0.287	6156.0
0.222	6159.3	0.233	6158.2	0.228	6157.6	0.287	6156.4	0.261	6154.6	0.287	6158.2
0.223	6159.5	0.233	6159.3	0.228	6157.7	0.287	6158.2	0.261	6156.6	0.287	6158.3
0.223	6160.8	0.234	6161.6	0.228	6161.7	0.288	6160.5	0.261	6160.6	0.288	6159.2
0.223	6162.7	0.234	6162.4	0.228	6161.8	0.288	6163.1	0.261	6160.5	0.288	6161.7
0.223	6162.9	0.234	6164.1	0.229	6164.8	0.289	6163.5	0.262	6162.1	0.289	6163.8
0.223	6165.9	0.234	6165.6	0.229	6165.2	0.289	6164.8	0.262	6165.6	0.289	6166.5
0.224	6167.4	0.234	6167.5	0.229	6167.1	0.289	6166.7	0.262	6164.3	0.289	6167.3
0.224	6170.9	0.235	6169.0	0.229	6167.6	0.290	6169.2	0.263	6166.7	0.290	6167.8
0.224	6171.1	0.235	6171.7	0.230	6169.1	0.290	6171.9	0.263	6170.5	0.290	6169.9
0.224	6173.6	0.235	6172.8	0.230	6170.9	0.290	6172.4	0.263	6170.0	0.290	6172.0
0.224	6174.0	0.235	6174.7	0.230	6171.7	0.291	6173.0	0.264	6172.3	0.291	6173.9
0.225	6174.6	0.236	6175.9	0.230	6174.1	0.291	6175.0	0.264	6175.6	0.291	6175.9
0.225	6177.2	0.236	6178.4	0.230	6174.1	0.292	6177.5	0.264	6174.4	0.292	6177.0
0.225	6178.7	0.236	6178.9	0.231	6177.1	0.292	6179.9	0.265	6177.5	0.292	6177.7
0.225	6181.4	0.236	6182.0	0.231	6177.8	0.292	6180.9	0.265	6181.1	0.292	6179.8
0.225	6182.6	0.237	6182.7	0.231	6180.5	0.293	6180.7	0.265	6180.3	0.293	6181.6
0.226	6186.4	0.237	6185.8	0.231	6181.8	0.293	6183.3	0.266	6182.6	0.293	6183.7
0.226	6185.7	0.237	6185.9	0.232	6184.7	0.294	6185.6	0.266	6184.5	0.294	6186.4
0.226	6187.7	0.237	6189.1	0.232	6185.2	0.294	6187.9	0.266	6185.7	0.294	6188.3
0.226	6189.2	0.238	6188.6	0.232	6188.4	0.294	6190.0	0.267	6187.5	0.294	6188.5
0.226	6189.1	0.238	6192.1	0.232	6188.8	0.295	6191.0	0.267	6189.1	0.295	6188.8
0.227	6192.4	0.238	6192.5	0.232	6191.9	0.295	6191.4	0.267	6192.1	0.295	6191.1
0.227	6193.1	0.238	6196.0	0.233	6192.7	0.295	6193.0	0.268	6191.1	0.296	6193.6
0.227	6196.8	0.238	6195.9	0.233	6195.9	0.296	6195.1	0.268	6193.3	0.296	6195.4
0.227	6197.7	0.239	6199.1	0.233	6196.2	0.296	6196.7	0.268	6196.8	0.296	6197.5
0.227	6201.3	0.239	6198.5	0.233	6199.7	0.297	6199.6	0.269	6196.7	0.297	6199.3
0.228	6201.4	0.239	6200.9	0.234	6199.6	0.297	6202.0	0.269	6199.2	0.297	6201.0
0.228	6203.3	0.239	6201.4	0.234	6203.0	0.298	6202.8	0.269	6201.2	0.298	6202.0
0.228	6204.5	0.240	6204.2	0.234	6203.0	0.298	6203.1	0.270	6202.9	0.298	6203.1
0.228	6204.6	0.240	6203.9	0.234	6205.9	0.298	6204.5	0.270	6203.8	0.299	6204.6
0.229	6207.3	0.240	6206.8	0.235	6205.9	0.299	6206.9	0.270	6206.0	0.299	6206.6
0.229	6207.8	0.240	6207.2	0.235	6209.8	0.299	6209.0	0.271	6209.1	0.299	6208.8
0.229	6210.3	0.241	6209.6	0.235	6209.8	0.300	6210.9	0.271	6208.5	0.300	6210.3
0.229	6212.0	0.241	6210.3	0.235	6213.1	0.300	6212.9	0.271	6210.8	0.300	6212.3
0.229	6215.2	0.241	6213.2	0.236	6213.1	0.300	6214.7	0.272	6212.7	0.301	6214.6
0.230	6216.1	0.241	6214.6	0.236	6216.1	0.301	6216.0	0.272	6215.5	0.301	6216.3
0.230	6219.7	0.242	6217.0	0.236	6216.1	0.301	6216.5	0.272	6215.1	0.302	6217.6
0.230	6219.8	0.242	6219.9	0.236	6219.6	0.302	6217.8	0.273	6217.3	0.302	6218.2
0.230	6222.4	0.242	6221.1	0.236	6219.6	0.302	6220.1	0.273	6219.3	0.302	6220.0
0.230	6223.1	0.242	6223.8	0.237	6222.9	0.302	6222.2	0.273	6220.0	0.303	6221.7
0.231	6223.7	0.243	6223.9	0.237	6223.3	0.303	6223.6	0.274	6221.7	0.303	6222.6
0.231	6225.4	0.243	6227.3	0.237	6226.3	0.303	6225.5	0.274	6224.2	0.304	6224.0
0.231	6225.7	0.243	6227.1	0.237	6226.3	0.304	6227.8	0.274	6227.6	0.304	6226.6
0.231	6228.6	0.243	6229.6	0.238	6229.5	0.304	6230.3	0.275	6227.2	0.305	6228.7
0.232	6229.7	0.244	6229.8	0.238	6229.4	0.305	6231.6	0.275	6228.6	0.305	6230.2
0.232	6232.7	0.244	6232.0	0.238	6232.3	0.305	6232.1	0.275	6230.8	0.305	6231.6
0.232	6234.2	0.244	6231.7	0.238	6232.7	0.305	6233.2	0.276	6233.7	0.306	6233.9
0.232	6237.3	0.244	6234.6	0.239	6235.4	0.306	6235.3	0.276	6234.3	0.306	6236.2
0.232	6237.6	0.245	6236.1	0.239	6235.6	0.306	6236.7	0.277	6234.9	0.307	6237.5

0.233	6241.4	0.245	6238.7	0.239	6238.4	0.307	6237.5	0.277	6237.2	0.307	6239.2
0.233	6241.1	0.245	6241.3	0.239	6238.6	0.307	6239.7	0.277	6240.1	0.308	6241.1
0.233	6244.4	0.245	6242.9	0.240	6240.6	0.308	6242.0	0.278	6241.7	0.308	6242.8
0.233	6244.7	0.246	6246.0	0.240	6241.4	0.308	6243.8	0.278	6241.8	0.309	6244.0
0.234	6246.4	0.246	6245.2	0.240	6244.4	0.309	6245.1	0.278	6243.7	0.309	6245.9
0.234	6248.2	0.246	6247.3	0.240	6244.5	0.309	6247.0	0.279	6246.5	0.310	6247.8
0.234	6248.8	0.247	6247.4	0.241	6247.8	0.309	6249.4	0.279	6248.9	0.310	6249.4
0.234	6250.5	0.247	6250.1	0.241	6247.8	0.310	6250.8	0.279	6248.6	0.310	6251.1
0.234	6251.2	0.247	6250.7	0.241	6250.4	0.310	6251.9	0.280	6250.6	0.311	6252.3
0.235	6253.6	0.247	6253.2	0.241	6251.0	0.311	6254.4	0.280	6252.2	0.311	6254.1
0.235	6254.0	0.248	6256.3	0.242	6254.1	0.311	6256.9	0.280	6255.5	0.312	6256.2
0.235	6257.3	0.248	6257.6	0.242	6255.4	0.312	6257.8	0.281	6256.6	0.312	6257.3
0.235	6257.7	0.248	6260.8	0.242	6257.6	0.312	6259.2	0.281	6256.9	0.313	6258.9
0.236	6261.3	0.248	6260.1	0.242	6260.5	0.313	6261.5	0.282	6258.8	0.313	6260.7
0.236	6261.5	0.249	6262.9	0.243	6261.8	0.313	6263.3	0.282	6261.0	0.314	6262.9
0.236	6264.3	0.249	6262.5	0.243	6264.6	0.314	6264.7	0.282	6263.8	0.314	6264.0
0.236	6265.1	0.249	6265.0	0.243	6264.8	0.314	6266.3	0.283	6264.0	0.315	6266.0
0.236	6268.0	0.249	6266.4	0.243	6268.1	0.314	6268.2	0.283	6264.5	0.315	6268.4
0.237	6268.5	0.250	6269.0	0.243	6267.7	0.315	6269.8	0.283	6266.7	0.316	6269.2
0.237	6272.6	0.250	6272.2	0.244	6270.9	0.315	6271.3	0.284	6268.8	0.316	6271.0
0.237	6272.6	0.250	6272.5	0.244	6270.5	0.316	6272.8	0.284	6271.7	0.317	6273.0
0.237	6276.2	0.250	6275.0	0.244	6273.1	0.316	6274.8	0.285	6272.3	0.317	6274.4
0.238	6276.3	0.251	6274.3	0.245	6272.1	0.317	6276.7	0.285	6273.3	0.318	6275.7
0.238	6279.4	0.251	6277.0	0.245	6275.3	0.317	6277.4	0.285	6275.9	0.318	6276.7
0.238	6279.1	0.251	6278.2	0.245	6275.9	0.318	6279.2	0.286	6277.8	0.319	6279.0
0.238	6282.7	0.252	6280.3	0.245	6278.9	0.318	6281.7	0.286	6280.9	0.319	6280.3
0.239	6282.8	0.252	6283.9	0.246	6281.2	0.319	6283.0	0.287	6282.2	0.320	6281.5
0.239	6286.3	0.252	6284.0	0.246	6283.4	0.319	6284.2	0.287	6282.1	0.320	6283.2
0.239	6286.5	0.252	6286.3	0.246	6286.3	0.320	6286.0	0.287	6283.6	0.321	6284.6
0.239	6289.5	0.253	6285.2	0.246	6286.2	0.320	6287.6	0.288	6285.4	0.321	6286.2
0.239	6289.8	0.253	6288.3	0.247	6289.0	0.321	6289.0	0.288	6287.4	0.322	6288.1
0.240	6293.0	0.253	6291.4	0.247	6288.9	0.321	6290.4	0.288	6290.1	0.322	6290.8
0.240	6292.7	0.253	6292.4	0.247	6291.2	0.322	6292.2	0.289	6291.3	0.323	6292.6
0.240	6296.1	0.254	6295.2	0.247	6290.9	0.322	6293.5	0.289	6292.0	0.323	6294.2
0.240	6296.5	0.254	6294.1	0.248	6294.3	0.323	6294.2	0.290	6293.8	0.324	6296.0
0.241	6299.6	0.254	6296.7	0.248	6295.5	0.323	6296.5	0.290	6295.5	0.324	6297.5
0.241	6300.1	0.255	6298.8	0.248	6297.7	0.324	6298.4	0.290	6296.6	0.325	6298.0
0.241	6303.3	0.255	6300.9	0.248	6300.1	0.324	6300.2	0.291	6299.4	0.325	6299.5
0.241	6302.7	0.255	6303.5	0.249	6301.4	0.325	6302.0	0.291	6302.0	0.326	6301.1
0.242	6306.0	0.255	6302.8	0.249	6304.7	0.325	6304.4	0.292	6303.1	0.326	6303.6
0.242	6306.4	0.256	6305.2	0.249	6304.3	0.326	6306.5	0.292	6303.7	0.327	6305.5
0.242	6309.6	0.256	6306.8	0.249	6306.3	0.326	6307.6	0.292	6305.0	0.327	6308.0
0.242	6309.9	0.256	6309.4	0.250	6306.0	0.327	6309.5	0.293	6307.0	0.328	6308.9
0.242	6313.4	0.257	6312.2	0.250	6308.9	0.327	6310.6	0.293	6309.3	0.329	6309.9
0.243	6313.2	0.257	6311.0	0.250	6310.1	0.328	6311.5	0.294	6310.9	0.329	6311.3
0.243	6316.1	0.257	6313.0	0.250	6312.9	0.328	6312.8	0.294	6312.8	0.330	6313.2
0.243	6316.1	0.257	6315.0	0.251	6316.6	0.329	6315.3	0.295	6314.7	0.330	6315.3
0.243	6319.0	0.258	6317.8	0.251	6316.9	0.329	6317.4	0.295	6316.3	0.331	6317.3
0.244	6319.0	0.258	6320.5	0.251	6319.2	0.330	6319.2	0.295	6316.8	0.331	6319.4
0.244	6322.6	0.258	6318.7	0.252	6317.7	0.330	6321.4	0.296	6317.9	0.332	6319.8
0.244	6322.6	0.259	6321.2	0.252	6320.1	0.331	6323.0	0.296	6320.5	0.332	6321.2
0.244	6325.3	0.259	6324.3	0.252	6321.6	0.332	6323.3	0.297	6322.7	0.333	6323.5
0.245	6325.2	0.259	6325.9	0.252	6324.4	0.332	6324.7	0.297	6324.5	0.334	6325.6
0.245	6327.8	0.259	6328.3	0.253	6328.1	0.333	6326.8	0.297	6325.6	0.334	6327.0
0.245	6327.7	0.260	6327.2	0.253	6328.2	0.333	6328.8	0.298	6327.7	0.335	6328.2
0.245	6330.7	0.260	6330.1	0.253	6330.7	0.334	6331.2	0.298	6330.4	0.335	6329.2
0.246	6330.8	0.260	6333.7	0.253	6329.3	0.334	6333.2	0.299	6332.2	0.336	6331.8

0.246	6333.9	0.261	6333.1	0.254	6331.8	0.335	6333.4	0.299	6333.1	0.336	6334.7
0.246	6334.2	0.261	6335.2	0.254	6334.0	0.335	6334.4	0.300	6333.9	0.337	6335.3
0.246	6337.4	0.261	6337.5	0.254	6336.3	0.336	6337.5	0.300	6335.0	0.338	6336.3
0.247	6337.7	0.261	6339.1	0.255	6340.1	0.337	6339.4	0.300	6336.9	0.338	6339.0
0.247	6340.4	0.262	6341.1	0.255	6338.8	0.337	6340.6	0.301	6338.3	0.339	6340.8
0.247	6342.6	0.262	6340.1	0.255	6340.5	0.338	6342.2	0.301	6339.8	0.339	6341.6
0.247	6344.3	0.262	6343.6	0.255	6341.5	0.338	6343.0	0.302	6342.1	0.340	6343.7
0.248	6347.1	0.263	6347.3	0.256	6344.2	0.339	6345.4	0.302	6344.2	0.341	6345.7
0.248	6348.5	0.263	6346.2	0.256	6347.8	0.339	6348.1	0.303	6345.8	0.341	6347.1
0.248	6351.6	0.263	6348.4	0.256	6347.7	0.340	6349.0	0.303	6347.5	0.342	6348.4
0.248	6351.2	0.264	6352.0	0.256	6349.1	0.341	6349.6	0.304	6349.5	0.342	6350.3
0.249	6353.6	0.264	6351.3	0.257	6349.0	0.341	6352.3	0.304	6351.5	0.343	6352.0
0.249	6353.8	0.264	6353.3	0.257	6352.3	0.342	6354.5	0.304	6352.9	0.344	6353.4
0.249	6356.5	0.264	6355.8	0.257	6356.2	0.342	6355.2	0.305	6354.1	0.344	6355.3
0.249	6356.2	0.265	6357.5	0.258	6356.0	0.343	6357.1	0.305	6356.1	0.345	6357.6
0.250	6359.1	0.265	6359.1	0.258	6357.5	0.344	6359.2	0.306	6358.5	0.346	6357.8
0.250	6359.5	0.265	6359.6	0.258	6358.2	0.344	6360.9	0.306	6359.7	0.346	6360.2
0.250	6362.0	0.266	6361.8	0.258	6361.4	0.345	6361.8	0.307	6361.4	0.347	6362.5
0.250	6363.5	0.266	6364.4	0.259	6364.8	0.345	6363.3	0.307	6364.1	0.347	6363.2
0.251	6365.9	0.266	6364.6	0.259	6363.8	0.346	6365.8	0.308	6365.3	0.348	6365.2
0.251	6368.9	0.267	6367.5	0.259	6365.6	0.347	6367.5	0.308	6366.4	0.349	6366.7
0.251	6369.5	0.267	6369.9	0.260	6366.8	0.347	6368.2	0.309	6368.2	0.349	6368.1
0.251	6373.0	0.267	6369.4	0.260	6370.1	0.348	6371.1	0.309	6370.2	0.350	6370.5
0.252	6372.8	0.268	6371.9	0.260	6373.3	0.348	6372.6	0.310	6371.4	0.351	6371.9
0.252	6374.8	0.268	6375.1	0.260	6371.6	0.349	6373.2	0.310	6372.8	0.351	6374.0
0.252	6374.1	0.268	6374.4	0.261	6373.4	0.350	6375.9	0.310	6374.8	0.352	6375.3
0.252	6376.9	0.268	6377.3	0.261	6376.4	0.350	6377.4	0.311	6376.6	0.353	6377.2
0.253	6378.0	0.269	6379.6	0.261	6377.9	0.351	6378.4	0.311	6378.4	0.353	6378.6
0.253	6380.7	0.269	6378.8	0.262	6380.4	0.352	6381.2	0.312	6379.6	0.354	6380.5
0.253	6383.5	0.269	6381.8	0.262	6380.0	0.352	6381.6	0.312	6381.6	0.355	6381.9
0.253	6385.0	0.270	6384.9	0.262	6382.9	0.353	6383.8	0.313	6383.8	0.356	6383.1
0.254	6388.0	0.270	6385.0	0.262	6386.2	0.354	6386.1	0.313	6385.0	0.356	6385.5
0.254	6387.3	0.270	6387.4	0.263	6384.9	0.354	6386.6	0.314	6386.8	0.357	6386.4
0.254	6389.6	0.271	6389.3	0.263	6387.7	0.355	6389.2	0.314	6388.7	0.358	6389.1
0.255	6389.8	0.271	6389.5	0.263	6390.8	0.356	6390.4	0.315	6389.3	0.358	6390.0
0.255	6392.3	0.271	6392.0	0.264	6391.2	0.356	6392.2	0.315	6390.8	0.359	6392.4
0.255	6393.7	0.272	6394.2	0.264	6392.9	0.357	6393.9	0.316	6392.7	0.360	6393.6
0.255	6396.1	0.272	6396.0	0.264	6393.1	0.358	6395.9	0.316	6394.2	0.360	6395.0
0.256	6399.3	0.272	6396.4	0.265	6396.1	0.358	6397.2	0.317	6395.1	0.361	6397.3
0.256	6399.7	0.273	6398.1	0.265	6399.1	0.359	6399.0	0.317	6396.3	0.362	6398.2
0.256	6402.2	0.273	6401.6	0.265	6398.3	0.360	6400.2	0.318	6398.8	0.363	6400.6
0.256	6401.0	0.273	6401.4	0.265	6401.2	0.360	6401.8	0.318	6400.1	0.363	6401.6
0.257	6404.0	0.274	6403.9	0.266	6404.4	0.361	6404.3	0.319	6401.9	0.364	6403.9
0.257	6405.3	0.274	6407.2	0.266	6402.9	0.362	6404.9	0.319	6404.4	0.365	6405.3
0.257	6407.9	0.274	6406.0	0.266	6405.4	0.363	6407.9	0.320	6406.8	0.366	6406.5
0.258	6410.7	0.275	6408.7	0.267	6409.3	0.363	6408.5	0.320	6408.2	0.366	6409.2
0.258	6410.9	0.275	6411.0	0.267	6408.7	0.364	6410.7	0.321	6409.8	0.367	6409.7
0.258	6413.8	0.275	6412.4	0.267	6410.7	0.365	6412.2	0.321	6411.6	0.368	6412.0
0.258	6412.8	0.276	6413.4	0.268	6414.0	0.365	6413.6	0.322	6412.5	0.369	6413.6
0.259	6415.4	0.276	6415.0	0.268	6413.7	0.366	6415.9	0.322	6413.1	0.370	6415.1
0.259	6417.8	0.276	6418.1	0.268	6415.8	0.367	6416.4	0.323	6415.3	0.370	6416.8
0.259	6419.8	0.277	6417.3	0.269	6418.9	0.368	6419.3	0.324	6417.3	0.371	6418.7
0.259	6422.8	0.277	6420.0	0.269	6419.4	0.368	6420.1	0.324	6419.0	0.372	6420.4
0.260	6421.8	0.277	6422.5	0.269	6420.5	0.369	6422.3	0.325	6421.4	0.373	6421.4
0.260	6423.6	0.278	6424.2	0.269	6423.1	0.370	6424.0	0.325	6423.2	0.374	6423.6
0.260	6425.2	0.278	6424.3	0.270	6424.0	0.371	6425.0	0.326	6424.3	0.374	6425.3
0.261	6428.1	0.278	6426.6	0.270	6426.1	0.371	6427.9	0.326	6425.4	0.375	6426.8

0.261	6431.4	0.279	6430.0	0.270	6429.1	0.372	6428.6	0.327	6427.0	0.376	6428.1
0.261	6430.4	0.279	6430.1	0.271	6429.5	0.373	6430.8	0.327	6428.8	0.377	6430.5
0.261	6432.2	0.279	6431.6	0.271	6431.0	0.374	6432.4	0.328	6431.2	0.378	6431.6
0.262	6432.9	0.280	6432.9	0.271	6433.6	0.375	6433.7	0.328	6433.7	0.379	6434.0
0.262	6436.4	0.280	6436.6	0.272	6434.0	0.375	6435.4	0.329	6434.4	0.380	6435.4
0.262	6439.9	0.280	6436.0	0.272	6435.7	0.376	6437.4	0.330	6434.9	0.380	6437.0
0.262	6439.1	0.281	6438.9	0.272	6439.4	0.377	6438.8	0.330	6437.1	0.381	6438.3
0.263	6440.3	0.281	6440.9	0.273	6438.3	0.378	6440.1	0.331	6439.5	0.382	6440.5
0.263	6440.9	0.281	6443.2	0.273	6440.6	0.379	6442.3	0.331	6441.4	0.383	6441.5
0.263	6444.4	0.282	6442.4	0.273	6444.1	0.379	6443.5	0.332	6443.0	0.384	6443.9
0.264	6448.3	0.282	6445.0	0.274	6443.0	0.380	6445.8	0.332	6443.4	0.385	6444.7
0.264	6447.3	0.282	6447.4	0.274	6446.1	0.381	6446.8	0.333	6445.1	0.386	6447.2
0.264	6448.7	0.283	6450.1	0.274	6449.3	0.382	6448.8	0.334	6448.2	0.387	6448.3
0.264	6449.8	0.283	6449.3	0.275	6448.5	0.383	6450.2	0.334	6450.1	0.388	6450.4
0.265	6452.7	0.284	6451.9	0.275	6450.8	0.384	6452.6	0.335	6450.0	0.389	6451.7
0.265	6456.3	0.284	6453.9	0.275	6453.5	0.384	6453.8	0.335	6452.2	0.390	6453.8
0.265	6455.0	0.284	6456.5	0.276	6455.0	0.385	6455.9	0.336	6454.8	0.391	6455.2
0.266	6457.3	0.285	6456.1	0.276	6455.9	0.386	6456.9	0.336	6456.1	0.391	6456.9
0.266	6460.0	0.285	6457.9	0.276	6457.2	0.387	6459.0	0.337	6457.0	0.392	6458.3
0.266	6460.5	0.285	6459.8	0.277	6460.6	0.388	6460.2	0.338	6458.9	0.393	6460.0
0.267	6462.9	0.286	6462.7	0.277	6459.4	0.389	6462.1	0.338	6461.1	0.394	6462.0
0.267	6462.9	0.286	6464.4	0.277	6462.6	0.390	6463.6	0.339	6462.9	0.395	6462.7
0.267	6466.5	0.286	6464.4	0.278	6465.3	0.391	6465.8	0.339	6463.5	0.396	6465.4
0.267	6469.5	0.287	6466.2	0.278	6466.0	0.392	6466.8	0.340	6465.8	0.397	6466.2
0.268	6467.5	0.287	6468.5	0.278	6467.2	0.393	6469.1	0.341	6468.3	0.399	6468.9
0.268	6470.2	0.288	6471.8	0.279	6468.6	0.394	6470.3	0.341	6468.7	0.400	6470.2
0.268	6474.0	0.288	6472.5	0.279	6472.4	0.394	6472.3	0.342	6470.4	0.401	6472.0
0.269	6474.2	0.288	6473.1	0.279	6471.9	0.395	6473.7	0.343	6473.2	0.402	6474.0
0.269	6476.1	0.289	6474.7	0.280	6474.6	0.396	6475.5	0.343	6473.6	0.403	6474.9
0.269	6477.4	0.289	6477.3	0.280	6476.6	0.397	6477.0	0.344	6475.7	0.404	6477.1
0.269	6479.4	0.289	6480.0	0.280	6478.3	0.398	6478.8	0.344	6478.0	0.405	6478.6
0.270	6481.4	0.290	6480.7	0.281	6478.7	0.399	6480.5	0.345	6478.2	0.406	6479.9
0.270	6481.2	0.290	6481.4	0.281	6481.1	0.400	6481.9	0.346	6481.0	0.407	6481.9
0.270	6484.5	0.291	6483.4	0.281	6483.8	0.401	6484.0	0.346	6482.9	0.408	6483.5
0.271	6487.9	0.291	6485.8	0.282	6484.5	0.402	6485.3	0.347	6483.2	0.410	6484.7
0.271	6486.6	0.291	6488.6	0.282	6485.6	0.403	6487.3	0.348	6486.5	0.411	6487.0
0.271	6488.9	0.292	6489.0	0.282	6487.5	0.404	6488.5	0.348	6487.1	0.412	6488.2
0.272	6492.5	0.292	6488.8	0.283	6491.2	0.405	6490.4	0.349	6489.0	0.413	6489.8
0.272	6491.3	0.292	6491.4	0.283	6491.2	0.407	6492.3	0.350	6491.3	0.414	6492.2
0.272	6494.3	0.293	6493.8	0.283	6492.1	0.408	6493.5	0.350	6491.8	0.416	6493.5
0.273	6497.8	0.293	6496.1	0.284	6494.0	0.409	6495.5	0.351	6494.5	0.417	6494.7
0.273	6496.9	0.294	6498.2	0.284	6497.5	0.410	6497.4	0.352	6495.5	0.418	6496.7
0.273	6498.9	0.294	6498.7	0.284	6498.2	0.411	6498.6	0.352	6497.5	0.419	6498.6
0.273	6501.9	0.294	6499.7	0.285	6499.0	0.412	6500.7	0.353	6499.3	0.421	6499.9
0.274	6501.8	0.295	6501.8	0.285	6500.8	0.413	6502.0	0.354	6501.1	0.422	6501.4
0.274	6503.8	0.295	6503.5	0.286	6503.6	0.414	6503.4	0.354	6502.3	0.423	6503.7
0.274	6507.4	0.296	6505.3	0.286	6505.0	0.415	6505.7	0.355	6504.7	0.425	6505.3
0.275	6506.8	0.296	6507.8	0.286	6505.3	0.417	6506.7	0.356	6505.6	0.426	6506.6
0.275	6508.8	0.296	6509.6	0.287	6507.7	0.418	6508.7	0.357	6507.8	0.427	6508.1
0.275	6512.2	0.297	6510.4	0.287	6509.5	0.419	6510.5	0.357	6509.0	0.429	6510.0
0.276	6511.9	0.297	6511.0	0.287	6512.1	0.420	6511.9	0.358	6510.8	0.430	6512.1
0.276	6514.4	0.298	6513.1	0.288	6512.5	0.421	6513.5	0.359	6512.5	0.432	6513.5
0.276	6517.8	0.298	6515.4	0.288	6514.2	0.423	6515.7	0.359	6513.9	0.433	6514.9
0.277	6516.2	0.298	6517.4	0.288	6515.8	0.424	6516.7	0.360	6516.0	0.435	6516.0
0.277	6518.7	0.299	6519.7	0.289	6518.0	0.425	6518.3	0.361	6517.9	0.436	6518.1
0.277	6522.4	0.299	6521.3	0.289	6519.8	0.426	6520.4	0.362	6519.0	0.438	6519.8
0.278	6521.0	0.300	6522.5	0.290	6519.7	0.428	6522.4	0.362	6521.1	0.439	6521.4

0.278	6524.2	0.300	6523.7	0.290	6522.5	0.429	6523.5	0.363	6522.3	0.441	6523.3
0.278	6526.4	0.300	6524.7	0.290	6524.1	0.430	6525.3	0.364	6524.5	0.443	6525.1
0.279	6526.1	0.301	6526.2	0.291	6526.7	0.432	6527.3	0.365	6525.7	0.444	6526.9
0.279	6529.4	0.301	6528.5	0.291	6527.8	0.433	6528.9	0.365	6527.5	0.446	6528.5
0.279	6531.6	0.302	6531.0	0.291	6528.8	0.434	6530.0	0.366	6529.1	0.448	6530.4
0.280	6533.5	0.302	6532.9	0.292	6531.0	0.436	6531.8	0.367	6530.7	0.450	6531.9
0.280	6534.3	0.303	6534.2	0.292	6532.7	0.437	6534.0	0.368	6532.4	0.451	6533.4
0.280	6535.5	0.303	6536.0	0.293	6535.6	0.439	6535.6	0.368	6534.0	0.453	6535.2
0.281	6539.0	0.303	6537.6	0.293	6537.3	0.440	6537.2	0.369	6535.9	0.455	6536.7
0.281	6538.2	0.304	6539.0	0.293	6537.5	0.441	6538.3	0.370	6536.9	0.457	6537.9
0.281	6540.9	0.304	6539.6	0.294	6538.3	0.443	6539.9	0.371	6539.6	0.459	6539.4
0.282	6543.8	0.305	6541.1	0.294	6540.3	0.444	6541.5	0.372	6540.5	0.461	6540.9
0.282	6543.7	0.305	6543.0	0.295	6542.5	0.446	6542.9	0.372	6542.7	0.463	6542.6
0.282	6545.6	0.306	6545.1	0.295	6545.5	0.448	6545.7	0.373	6543.8	0.465	6544.8
0.283	6547.4	0.306	6546.7	0.295	6546.8	0.449	6547.7	0.374	6545.9	0.467	6546.4
0.283	6550.6	0.306	6548.2	0.296	6547.1	0.451	6549.0	0.375	6547.8	0.470	6547.6
0.283	6549.7	0.307	6550.3	0.296	6548.7	0.452	6550.6	0.376	6549.3	0.472	6549.0
0.284	6552.1	0.307	6552.8	0.296	6551.2	0.454	6551.7	0.377	6550.7	0.474	6551.1
0.284	6554.6	0.308	6554.6	0.297	6553.4	0.456	6553.3	0.377	6552.3	0.477	6552.5
0.284	6555.7	0.308	6556.0	0.297	6555.4	0.458	6554.3	0.378	6554.3	0.479	6554.1
0.285	6557.1	0.309	6558.1	0.298	6556.5	0.459	6556.9	0.379	6555.5	0.482	6555.7
0.285	6559.3	0.309	6560.0	0.298	6557.2	0.461	6558.6	0.380	6557.7	0.485	6557.0
0.285	6562.4	0.310	6561.2	0.298	6558.8	0.463	6560.3	0.381	6558.9	0.487	6558.7
0.286	6561.2	0.310	6562.4	0.299	6561.1	0.465	6562.0	0.382	6560.8	0.490	6560.2
0.286	6563.5	0.311	6564.5	0.299	6562.6	0.467	6563.6	0.383	6562.1	0.493	6561.8
0.286	6566.0	0.311	6566.1	0.300	6565.0	0.469	6565.0	0.384	6564.1	0.497	6563.2
0.287	6569.4	0.311	6566.8	0.300	6567.0	0.470	6567.1	0.385	6565.4	0.500	6564.7
0.287	6568.6	0.312	6568.1	0.300	6568.7	0.473	6568.7	0.385	6567.4	0.503	6566.0
0.287	6570.4	0.312	6570.9	0.301	6569.3	0.475	6569.9	0.386	6568.9	0.507	6567.4
0.288	6572.6	0.313	6572.2	0.301	6570.2	0.477	6571.3	0.387	6570.8	0.511	6568.3
0.288	6575.6	0.313	6573.0	0.302	6572.1	0.479	6573.0	0.388	6572.4	0.515	6570.0
0.288	6575.1	0.314	6575.3	0.302	6574.3	0.481	6575.1	0.389	6573.9	0.520	6570.9
0.289	6577.2	0.314	6577.1	0.303	6575.9	0.483	6576.7	0.390	6575.9	0.525	6571.6
0.289	6578.7	0.315	6578.6	0.303	6577.6	0.486	6578.0	0.391	6577.3	0.530	6572.5
0.289	6582.2	0.315	6580.0	0.303	6580.1	0.488	6579.5	0.392	6579.4	0.536	6572.5
0.290	6582.6	0.316	6582.0	0.304	6582.5	0.490	6581.5	0.393	6580.6	0.542	6572.2
0.290	6584.1	0.316	6584.4	0.304	6583.9	0.493	6582.9	0.394	6582.2	0.549	6571.2
0.291	6585.3	0.317	6585.7	0.305	6584.3	0.495	6584.9	0.395	6584.0	0.558	6568.2
0.291	6588.0	0.317	6587.2	0.305	6585.1	0.498	6586.0	0.396	6585.9	0.568	6562.3
0.291	6589.5	0.318	6589.2	0.306	6587.0	0.501	6587.5	0.397	6587.5	0.580	6549.4
0.292	6590.3	0.318	6591.2	0.306	6589.0	0.503	6589.4	0.398	6588.9	0.597	6515.4
0.292	6592.7	0.319	6592.2	0.306	6590.3	0.506	6591.0	0.399	6590.8	0.625	6384.1
0.292	6594.4	0.319	6594.3	0.307	6592.3	0.509	6592.5	0.400	6592.1	0.665	5826.3
0.293	6596.6	0.320	6596.5	0.307	6594.6	0.512	6593.6	0.401	6594.3	0.708	4680.7
0.293	6596.4	0.320	6597.8	0.308	6596.7	0.515	6595.8	0.402	6595.7	0.714	3195.8
0.293	6598.8	0.320	6599.3	0.308	6598.0	0.519	6597.2	0.403	6597.2		
0.294	6601.2	0.321	6601.2	0.309	6599.8	0.522	6598.7	0.404	6599.3		
0.294	6603.3	0.321	6602.8	0.309	6602.1	0.526	6600.4	0.406	6600.6		
0.295	6605.2	0.322	6603.3	0.309	6604.1	0.529	6601.7	0.407	6602.2		
0.295	6604.9	0.323	6604.8	0.310	6605.0	0.533	6602.7	0.408	6604.3		
0.295	6607.4	0.323	6606.7	0.310	6606.1	0.537	6604.6	0.409	6605.1		
0.296	6609.4	0.324	6607.9	0.311	6607.4	0.542	6605.6	0.410	6607.6		
0.296	6611.3	0.324	6609.6	0.311	6609.4	0.546	6607.0	0.411	6609.0		
0.296	6613.6	0.325	6612.1	0.312	6610.3	0.551	6607.7	0.412	6610.5		
0.297	6614.2	0.325	6614.5	0.312	6611.6	0.556	6609.1	0.414	6612.5		
0.297	6615.3	0.326	6615.9	0.313	6613.9	0.562	6610.2	0.415	6614.1		
0.298	6617.1	0.326	6617.7	0.313	6615.3	0.568	6610.9	0.416	6615.3		

0.298	6618.9	0.327	6619.3	0.313	6616.2	0.574	6611.0	0.417	6617.5
0.298	6621.6	0.327	6620.2	0.314	6618.4	0.581	6611.2	0.418	6619.2
0.299	6623.5	0.328	6621.2	0.314	6620.7	0.589	6610.6	0.420	6620.4
0.299	6624.2	0.328	6623.4	0.315	6621.8	0.598	6608.9	0.421	6622.2
0.300	6625.2	0.329	6625.1	0.315	6623.2	0.608	6605.3	0.422	6624.3
0.300	6627.1	0.329	6627.4	0.316	6625.3	0.620	6598.4	0.424	6625.7
0.300	6629.4	0.330	6629.5	0.316	6627.2	0.635	6584.1	0.425	6627.0
0.301	6631.8	0.330	6631.0	0.317	6628.6	0.655	6546.3	0.426	6628.4
0.301	6633.3	0.331	6631.5	0.317	6630.2	0.687	6393.4	0.428	6630.9
0.302	6633.2	0.332	6632.7	0.318	6631.9	0.728	5798.5	0.429	6632.4
0.302	6635.3	0.332	6635.5	0.318	6633.6	0.771	4353.2	0.430	6634.0
0.302	6637.7	0.333	6637.5	0.319	6635.3	0.774	3344.7	0.432	6635.2
0.303	6639.6	0.333	6639.6	0.319	6636.7			0.433	6637.1
0.303	6641.3	0.334	6640.6	0.320	6638.6			0.435	6638.9
0.304	6643.5	0.334	6641.1	0.320	6640.5			0.436	6640.7
0.304	6644.8	0.335	6643.4	0.321	6641.1			0.438	6642.7
0.304	6645.7	0.335	6646.2	0.321	6644.0			0.439	6643.7
0.305	6646.7	0.336	6647.5	0.322	6646.1			0.441	6645.1
0.305	6648.6	0.337	6648.2	0.322	6647.7			0.442	6647.0
0.306	6651.0	0.337	6650.0	0.323	6649.5			0.444	6648.7
0.306	6653.2	0.338	6652.5	0.323	6651.7			0.446	6650.6
0.306	6654.8	0.338	6654.3	0.324	6653.9			0.447	6652.3
0.307	6656.6	0.339	6655.3	0.324	6654.9			0.449	6654.2
0.307	6658.0	0.340	6656.3	0.325	6656.9			0.451	6655.9
0.308	6659.6	0.340	6659.1	0.325	6658.7			0.452	6657.7
0.308	6660.1	0.341	6661.4	0.326	6659.4			0.454	6659.2
0.309	6661.3	0.341	6661.3	0.326	6660.5			0.456	6660.6
0.309	6663.5	0.342	6663.5	0.327	6662.1			0.458	6662.5
0.309	6665.9	0.343	6666.5	0.327	6663.8			0.460	6664.1
0.310	6667.6	0.343	6666.8	0.328	6665.2			0.461	6665.5
0.310	6669.0	0.344	6668.2	0.328	6667.5			0.463	6666.9
0.311	6671.1	0.344	6671.2	0.329	6670.2			0.465	6668.4
0.311	6673.8	0.345	6671.7	0.329	6672.3			0.467	6670.0
0.312	6675.7	0.346	6673.5	0.330	6673.3			0.469	6671.7
0.312	6676.8	0.346	6675.9	0.330	6675.0			0.472	6673.6
0.312	6677.7	0.347	6676.7	0.331	6675.5			0.474	6675.3
0.313	6679.2	0.348	6678.7	0.331	6676.9			0.476	6676.6
0.313	6681.0	0.348	6681.0	0.332	6679.0			0.478	6678.0
0.314	6682.0	0.349	6681.4	0.332	6681.5			0.480	6680.3
0.314	6683.3	0.350	6684.0	0.333	6683.1			0.483	6681.9
0.315	6685.2	0.350	6685.4	0.333	6685.4			0.485	6683.1
0.315	6687.3	0.351	6686.2	0.334	6686.5			0.488	6685.2
0.315	6688.3	0.351	6689.3	0.335	6686.5			0.490	6686.4
0.316	6690.3	0.352	6689.7	0.335	6688.7			0.493	6688.2
0.316	6692.3	0.353	6692.7	0.336	6691.4			0.496	6689.3
0.317	6694.4	0.354	6693.7	0.336	6693.4			0.498	6691.4
0.317	6695.5	0.354	6695.5	0.337	6694.7			0.501	6692.9
0.318	6697.2	0.355	6697.5	0.337	6695.9			0.504	6694.4
0.318	6699.7	0.356	6698.4	0.338	6697.0			0.507	6695.9
0.319	6700.9	0.356	6700.6	0.339	6699.6			0.511	6697.6
0.319	6702.2	0.357	6701.8	0.339	6702.3			0.514	6699.1
0.320	6704.3	0.358	6703.4	0.340	6702.8			0.517	6700.2
0.320	6706.0	0.358	6705.4	0.340	6703.3			0.521	6701.7
0.321	6707.4	0.359	6706.9	0.341	6706.5			0.525	6703.6
0.321	6709.4	0.360	6708.8	0.341	6708.4			0.529	6705.0
0.322	6711.5	0.361	6710.4	0.342	6709.2			0.533	6706.2
0.322	6713.1	0.361	6711.5	0.343	6710.6			0.537	6707.4

0.322	6714.4	0.362	6713.9	0.343	6712.7
0.323	6715.5	0.363	6715.4	0.344	6714.9
0.323	6717.7	0.363	6717.2	0.344	6716.2
0.324	6719.1	0.364	6718.9	0.345	6717.2
0.324	6719.9	0.365	6720.4	0.346	6719.5
0.325	6722.0	0.366	6721.9	0.346	6721.5
0.325	6723.4	0.366	6724.0	0.347	6722.1
0.326	6725.0	0.367	6725.8	0.347	6724.6
0.326	6726.8	0.368	6726.7	0.348	6726.5
0.327	6728.7	0.369	6729.0	0.349	6726.8
0.327	6731.0	0.370	6729.9	0.349	6729.7
0.328	6732.3	0.370	6732.2	0.350	6731.6
0.328	6734.6	0.371	6733.6	0.351	6731.6
0.329	6737.1	0.372	6735.3	0.351	6735.0
0.329	6738.3	0.373	6736.9	0.352	6735.9
0.330	6739.5	0.374	6738.3	0.353	6737.2
0.330	6741.2	0.374	6740.9	0.353	6740.2
0.331	6742.9	0.375	6742.0	0.354	6740.5
0.331	6743.6	0.376	6743.9	0.355	6743.1
0.332	6745.4	0.377	6745.2	0.355	6744.4
0.333	6746.9	0.378	6747.4	0.356	6745.7
0.333	6749.3	0.379	6748.5	0.357	6748.2
0.334	6751.3	0.380	6750.9	0.357	6749.2
0.334	6753.8	0.381	6751.4	0.358	6751.2
0.335	6755.1	0.381	6753.7	0.359	6752.9
0.335	6755.5	0.382	6754.9	0.359	6754.5
0.336	6757.1	0.383	6757.1	0.360	6755.6
0.336	6758.7	0.384	6758.6	0.361	6758.3
0.337	6760.3	0.385	6760.8	0.361	6758.8
0.337	6763.1	0.386	6761.7	0.362	6761.8
0.338	6765.1	0.387	6764.0	0.363	6761.7
0.338	6766.1	0.388	6765.3	0.364	6764.7
0.339	6767.0	0.389	6767.1	0.364	6765.8
0.340	6769.0	0.390	6768.6	0.365	6767.6
0.340	6771.1	0.391	6769.8	0.366	6769.9
0.341	6773.1	0.392	6772.4	0.366	6770.8
0.341	6775.2	0.393	6773.5	0.367	6773.1
0.342	6775.3	0.394	6775.9	0.368	6773.6
0.342	6776.7	0.395	6777.0	0.369	6776.5
0.343	6780.0	0.396	6778.7	0.369	6777.8
0.344	6781.6	0.397	6780.5	0.370	6778.8
0.344	6782.2	0.398	6781.6	0.371	6781.8
0.345	6783.9	0.399	6784.0	0.372	6782.2
0.345	6786.0	0.400	6785.0	0.373	6784.4
0.346	6788.0	0.401	6787.1	0.373	6785.9
0.346	6789.3	0.402	6788.7	0.374	6787.9
0.347	6790.4	0.403	6789.7	0.375	6789.1
0.348	6792.5	0.404	6792.4	0.376	6791.3
0.348	6795.2	0.405	6793.2	0.377	6793.0
0.349	6795.5	0.407	6795.2	0.377	6794.0
0.349	6797.4	0.408	6797.2	0.378	6796.2
0.350	6800.1	0.409	6798.5	0.379	6797.6
0.351	6800.6	0.410	6800.1	0.380	6799.8
0.351	6802.4	0.411	6802.2	0.381	6800.6
0.352	6805.2	0.413	6803.1	0.382	6802.9
0.353	6805.1	0.414	6805.0	0.382	6803.8
0.353	6807.2	0.415	6807.3	0.383	6806.6

0.542	6708.7
0.547	6710.1
0.552	6710.7
0.558	6711.9
0.564	6712.4
0.570	6712.7
0.577	6712.7
0.586	6711.2
0.595	6709.0
0.605	6703.8
0.619	6691.6
0.636	6656.5
0.665	6505.4
0.705	5883.5
0.747	3527.8

0.354	6810.4	0.416	6808.8	0.384	6807.6
0.354	6810.0	0.418	6809.7	0.385	6809.6
0.355	6812.3	0.419	6811.8	0.386	6810.7
0.356	6814.4	0.420	6813.8	0.387	6813.1
0.356	6815.0	0.422	6815.3	0.388	6813.7
0.357	6817.6	0.423	6816.3	0.389	6816.6
0.358	6818.7	0.424	6818.4	0.390	6817.3
0.358	6821.1	0.426	6820.4	0.391	6819.6
0.359	6823.8	0.427	6822.0	0.392	6820.7
0.360	6823.6	0.429	6823.7	0.392	6822.6
0.360	6826.5	0.430	6824.8	0.393	6824.2
0.361	6827.5	0.432	6826.5	0.394	6826.0
0.362	6829.4	0.433	6828.2	0.395	6827.8
0.362	6831.0	0.435	6830.2	0.396	6829.3
0.363	6832.5	0.436	6832.3	0.397	6831.1
0.364	6834.3	0.438	6833.8	0.398	6832.5
0.365	6836.0	0.440	6835.5	0.399	6834.7
0.365	6837.4	0.441	6836.8	0.400	6835.7
0.366	6839.7	0.443	6838.5	0.401	6837.8
0.367	6840.5	0.445	6840.0	0.402	6839.3
0.367	6842.5	0.447	6841.8	0.403	6840.8
0.368	6843.9	0.448	6843.4	0.405	6842.7
0.369	6845.9	0.450	6845.3	0.406	6844.1
0.370	6847.7	0.452	6846.5	0.407	6845.8
0.370	6849.5	0.454	6848.6	0.408	6847.7
0.371	6851.2	0.456	6850.0	0.409	6848.9
0.372	6852.7	0.458	6851.0	0.410	6851.2
0.373	6854.3	0.460	6852.7	0.411	6852.9
0.373	6855.8	0.463	6854.2	0.412	6853.9
0.374	6857.3	0.465	6856.2	0.414	6856.3
0.375	6859.4	0.467	6857.6	0.415	6857.5
0.376	6860.3	0.470	6859.4	0.416	6858.9
0.376	6863.2	0.472	6861.1	0.417	6861.0
0.377	6864.1	0.475	6862.4	0.418	6862.7
0.378	6865.9	0.477	6864.1	0.420	6863.7
0.379	6867.6	0.480	6865.4	0.421	6866.1
0.380	6869.0	0.483	6866.8	0.422	6867.8
0.380	6870.8	0.486	6868.8	0.423	6869.0
0.381	6872.4	0.489	6870.0	0.425	6870.5
0.382	6874.6	0.493	6871.3	0.426	6872.6
0.383	6875.8	0.496	6872.3	0.427	6874.2
0.384	6877.9	0.500	6874.0	0.429	6875.6
0.385	6878.5	0.504	6875.3	0.430	6877.5
0.385	6881.4	0.508	6876.0	0.432	6879.4
0.386	6882.5	0.513	6876.7	0.433	6881.3
0.387	6884.5	0.518	6877.5	0.435	6882.5
0.388	6885.6	0.524	6877.6	0.436	6884.0
0.389	6887.7	0.530	6876.6	0.437	6885.6
0.390	6888.5	0.537	6875.0	0.439	6887.1
0.391	6891.4	0.546	6870.7	0.441	6889.1
0.392	6892.0	0.556	6860.7	0.442	6890.7
0.393	6894.6	0.570	6835.1	0.444	6892.7
0.393	6895.6	0.592	6744.1	0.445	6894.4
0.394	6897.8	0.630	6302.1	0.447	6895.8
0.395	6899.0	0.672	5262.4	0.449	6897.6
0.396	6901.0	0.685	3583.6	0.450	6899.0
0.397	6902.3			0.452	6900.8

0.398	6904.3
0.399	6905.6
0.400	6907.4
0.401	6909.4
0.402	6910.4
0.403	6912.9
0.404	6913.8
0.405	6916.0
0.406	6917.5
0.407	6918.9
0.408	6921.2
0.409	6922.1
0.410	6924.3
0.412	6925.6
0.413	6927.1
0.414	6929.6
0.415	6931.0
0.416	6932.2
0.417	6934.4
0.418	6935.5
0.420	6937.3
0.421	6939.5
0.422	6940.6
0.423	6942.3
0.425	6944.4
0.426	6946.1
0.427	6947.0
0.428	6949.0
0.430	6951.0
0.431	6952.5
0.432	6953.8
0.434	6955.2
0.435	6958.1
0.437	6959.3
0.438	6960.5
0.439	6961.7
0.441	6963.7
0.442	6966.0
0.444	6967.6
0.446	6969.4
0.447	6970.8
0.449	6972.1
0.450	6974.0
0.452	6975.4
0.454	6976.8
0.456	6978.5
0.457	6980.1
0.459	6981.7
0.461	6983.4
0.463	6985.5
0.465	6987.2
0.467	6989.0
0.469	6990.5
0.471	6991.9
0.473	6993.3
0.475	6995.1
0.478	6997.1
0.454	6902.5
0.456	6904.1
0.458	6906.0
0.460	6907.6
0.462	6909.0
0.464	6910.6
0.466	6912.0
0.468	6913.5
0.470	6915.2
0.472	6916.9
0.474	6918.6
0.477	6920.0
0.479	6922.0
0.482	6923.2
0.484	6924.9
0.487	6926.6
0.489	6927.9
0.492	6929.4
0.495	6931.5
0.498	6932.6
0.501	6934.0
0.505	6935.7
0.508	6937.1
0.512	6938.4
0.516	6939.8
0.520	6941.1
0.524	6942.2
0.529	6943.2
0.534	6944.0
0.539	6944.5
0.545	6944.6
0.552	6944.0
0.559	6942.0
0.568	6937.6
0.579	6927.3
0.593	6899.5
0.617	6795.5
0.655	6300.7
0.697	5211.9
0.707	3416.5

0.480	6998.5
0.482	6999.6
0.485	7001.8
0.487	7002.9
0.490	7005.0
0.493	7006.0
0.496	7008.0
0.499	7008.8
0.502	7010.3
0.505	7012.4
0.508	7013.9
0.512	7015.2
0.516	7016.5
0.520	7017.5
0.524	7018.5
0.528	7019.9
0.533	7020.6
0.539	7021.3
0.544	7021.3
0.551	7021.2
0.558	7020.0
0.567	7017.0
0.577	7011.2
0.589	6998.4
0.606	6966.5
0.633	6846.9
0.673	6309.2
0.715	5182.5
0.722	3665.7

Extensometer Test Data for Threaded Rod Specimens

Specimen 1-1 Strain (%)	Specimen 1-2 Strain (%)	Specimen 1-3 Strain (%)	Specimen 2-1 Strain (%)	Specimen 2-2 Strain (%)	Specimen 2-3 Strain (%)
0.00037	0.00033	0.00010	0.00022	0.00024	-0.00043
0.00002	-0.00036	0.00019	-0.00018	-0.00024	0.00017
0.00029	-0.00004	0.00039	0.00018	-0.00011	-0.00047
0.00043	-0.00029	0.00045	-0.00001	-0.00023	0.00041
0.00032	-0.00008	0.00038	0.00051	0.00010	-0.00041
0.00064	0.00040	0.00102	0.00022	0.00014	0.00023
0.00064	0.00033	0.00116	0.00046	0.00037	-0.00022
0.00059	0.00050	0.00088	0.00049	0.00019	0.00052
0.00091	0.00064	0.00120	0.00088	0.00079	0.00039
0.00084	0.00052	0.00123	0.00063	0.00047	0.00099
0.00085	0.00084	0.00176	0.00107	0.00103	0.00050
0.00083	0.00088	0.00137	0.00029	0.00052	0.00082
0.00100	0.00101	0.00206	0.00117	0.00127	0.00078
0.00122	0.00112	0.00158	0.00074	0.00064	0.00111
0.00135	0.00095	0.00213	0.00138	0.00172	0.00097
0.00104	0.00146	0.00161	0.00150	0.00107	0.00151
0.00143	0.00087	0.00196	0.00098	0.00143	0.00059
0.00153	0.00182	0.00166	0.00128	0.00142	0.00158
0.00163	0.00127	0.00227	0.00159	0.00156	0.00120
0.00172	0.00150	0.00168	0.00122	0.00125	0.00149
0.00190	0.00111	0.00256	0.00202	0.00185	0.00143

0.00147	0.00174	0.00202	0.00109	0.00125	0.00168
0.00209	0.00141	0.00288	0.00164	0.00226	0.00156
0.00171	0.00209	0.00225	0.00175	0.00188	0.00185
0.00228	0.00198	0.00294	0.00228	0.00223	0.00157
0.00208	0.00186	0.00257	0.00192	0.00185	0.00182
0.00201	0.00161	0.00290	0.00203	0.00250	0.00168
0.00217	0.00212	0.00269	0.00183	0.00180	0.00205
0.00231	0.00215	0.00324	0.00217	0.00293	0.00215
0.00240	0.00246	0.00283	0.00204	0.00216	0.00198
0.00257	0.00227	0.00342	0.00289	0.00278	0.00243
0.00224	0.00239	0.00261	0.00188	0.00224	0.00224
0.00301	0.00243	0.00326	0.00264	0.00316	0.00262
0.00257	0.00288	0.00323	0.00245	0.00284	0.00265
0.00270	0.00240	0.00379	0.00277	0.00307	0.00266
0.00294	0.00307	0.00348	0.00263	0.00247	0.00288
0.00301	0.00262	0.00336	0.00265	0.00318	0.00280
0.00283	0.00292	0.00377	0.00272	0.00294	0.00271
0.00326	0.00278	0.00387	0.00285	0.00382	0.00313
0.00315	0.00324	0.00362	0.00290	0.00276	0.00255
0.00314	0.00317	0.00426	0.00303	0.00350	0.00309
0.00301	0.00301	0.00380	0.00315	0.00285	0.00289
0.00353	0.00327	0.00444	0.00331	0.00385	0.00351
0.00359	0.00365	0.00397	0.00318	0.00350	0.00308
0.00385	0.00345	0.00468	0.00369	0.00370	0.00370
0.00353	0.00380	0.00436	0.00349	0.00367	0.00325
0.00380	0.00346	0.00406	0.00297	0.00374	0.00309
0.00388	0.00400	0.00479	0.00372	0.00362	0.00341
0.00408	0.00362	0.00441	0.00389	0.00447	0.00388
0.00384	0.00394	0.00471	0.00390	0.00349	0.00349
0.00399	0.00408	0.00469	0.00362	0.00439	0.00380
0.00387	0.00371	0.00494	0.00366	0.00382	0.00348
0.00447	0.00398	0.00500	0.00376	0.00437	0.00382
0.00414	0.00423	0.00533	0.00408	0.00408	0.00399
0.00428	0.00412	0.00491	0.00398	0.00478	0.00429
0.00426	0.00450	0.00478	0.00389	0.00424	0.00390
0.00465	0.00438	0.00464	0.00348	0.00479	0.00416
0.00468	0.00474	0.00475	0.00437	0.00474	0.00417
0.00465	0.00487	0.00489	0.00411	0.00458	0.00471
0.00468	0.00478	0.00548	0.00449	0.00499	0.00428
0.00436	0.00479	0.00540	0.00399	0.00508	0.00461
0.00462	0.00476	0.00576	0.00447	0.00485	0.00443
0.00457	0.00499	0.00508	0.00437	0.00496	0.00472
0.00499	0.00509	0.00584	0.00469	0.00519	0.00469
0.00495	0.00514	0.00590	0.00457	0.00537	0.00498
0.00526	0.00525	0.00608	0.00521	0.00551	0.00490
0.00478	0.00532	0.00542	0.00445	0.00531	0.00489
0.00517	0.00514	0.00633	0.00517	0.00568	0.00507
0.00519	0.00535	0.00600	0.00489	0.00557	0.00511
0.00489	0.00502	0.00641	0.00526	0.00592	0.00503
0.00518	0.00541	0.00625	0.00504	0.00528	0.00545
0.00536	0.00548	0.00699	0.00508	0.00642	0.00529
0.00555	0.00578	0.00626	0.00455	0.00577	0.00549
0.00568	0.00563	0.00678	0.00525	0.00607	0.00519
0.00550	0.00580	0.00655	0.00495	0.00593	0.00567
0.00595	0.00585	0.00688	0.00520	0.00633	0.00561
0.00546	0.00608	0.00673	0.00493	0.00597	0.00545
0.00590	0.00607	0.00712	0.00539	0.00636	0.00572

0.00541	0.00620	0.00652	0.00526	0.00606	0.00563
0.00593	0.00618	0.00736	0.00576	0.00647	0.00599
0.00540	0.00626	0.00679	0.00532	0.00622	0.00590
0.00606	0.00630	0.00729	0.00594	0.00666	0.00608
0.00609	0.00678	0.00721	0.00557	0.00642	0.00593
0.00637	0.00613	0.00756	0.00615	0.00681	0.00653
0.00637	0.00680	0.00751	0.00559	0.00688	0.00624
0.00622	0.00643	0.00766	0.00594	0.00723	0.00673
0.00612	0.00692	0.00763	0.00593	0.00653	0.00609
0.00647	0.00681	0.00775	0.00591	0.00748	0.00670
0.00603	0.00720	0.00753	0.00604	0.00701	0.00660
0.00654	0.00685	0.00789	0.00627	0.00760	0.00693
0.00650	0.00722	0.00788	0.00651	0.00729	0.00634
0.00678	0.00671	0.00776	0.00654	0.00755	0.00702
0.00682	0.00746	0.00767	0.00647	0.00735	0.00657
0.00718	0.00702	0.00815	0.00648	0.00811	0.00698
0.00684	0.00730	0.00801	0.00645	0.00740	0.00681
0.00699	0.00726	0.00830	0.00645	0.00787	0.00757
0.00680	0.00795	0.00851	0.00663	0.00767	0.00717
0.00729	0.00738	0.00832	0.00656	0.00855	0.00775
0.00685	0.00785	0.00840	0.00661	0.00776	0.00721
0.00738	0.00752	0.00854	0.00673	0.00872	0.00758
0.00731	0.00806	0.00886	0.00665	0.00773	0.00745
0.00746	0.00760	0.00896	0.00654	0.00861	0.00792
0.00727	0.00825	0.00885	0.00701	0.00808	0.00763
0.00735	0.00779	0.00914	0.00670	0.00860	0.00771
0.00748	0.00837	0.00888	0.00733	0.00882	0.00807
0.00771	0.00785	0.00903	0.00668	0.00899	0.00787
0.00753	0.00826	0.00927	0.00753	0.00828	0.00783
0.00812	0.00837	0.00902	0.00700	0.00924	0.00812
0.00761	0.00874	0.00930	0.00749	0.00878	0.00801
0.00812	0.00848	0.00926	0.00711	0.00933	0.00845
0.00779	0.00875	0.00990	0.00743	0.00857	0.00779
0.00835	0.00818	0.00939	0.00716	0.00913	0.00835
0.00799	0.00900	0.00949	0.00772	0.00858	0.00882
0.00839	0.00890	0.00953	0.00725	0.00965	0.00814
0.00826	0.00888	0.00988	0.00761	0.00936	0.00865
0.00862	0.00877	0.00953	0.00753	0.00961	0.00850
0.00819	0.00931	0.01006	0.00757	0.00916	0.00875
0.00876	0.00913	0.00969	0.00723	0.01003	0.00896
0.00846	0.00920	0.00972	0.00780	0.00921	0.00896
0.00858	0.00905	0.00989	0.00737	0.01004	0.00894
0.00861	0.00946	0.01034	0.00806	0.00985	0.00898
0.00866	0.00923	0.00982	0.00744	0.01022	0.00906
0.00895	0.00989	0.01036	0.00795	0.00979	0.00960
0.00878	0.00950	0.01009	0.00754	0.01005	0.00920
0.00885	0.00972	0.01059	0.00812	0.01012	0.00964
0.00927	0.00949	0.01038	0.00785	0.01026	0.00937
0.00915	0.00987	0.01098	0.00831	0.01025	0.00971
0.00921	0.00944	0.01029	0.00784	0.01032	0.00951
0.00944	0.00972	0.01094	0.00853	0.01028	0.00994
0.00940	0.00974	0.01040	0.00799	0.01047	0.01016
0.00960	0.00990	0.01109	0.00842	0.01033	0.00987
0.00933	0.00958	0.01072	0.00822	0.01062	0.00991
0.00948	0.01008	0.01145	0.00862	0.01083	0.01010
0.00998	0.01030	0.01111	0.00839	0.01086	0.01014
0.00958	0.01021	0.01151	0.00857	0.01121	0.01052

0.00999	0.01011	0.01119	0.00822	0.01102	0.00999
0.01003	0.01050	0.01201	0.00873	0.01138	0.01048
0.00990	0.01043	0.01131	0.00852	0.01131	0.01023
0.01011	0.01056	0.01160	0.00908	0.01147	0.01065
0.01025	0.01068	0.01158	0.00880	0.01108	0.01064
0.01062	0.01041	0.01180	0.00864	0.01188	0.01057
0.01022	0.01062	0.01175	0.00900	0.01114	0.01096
0.01071	0.01065	0.01204	0.00901	0.01216	0.01046
0.01028	0.01077	0.01187	0.00908	0.01131	0.01075
0.01057	0.01096	0.01197	0.00909	0.01200	0.01102
0.01064	0.01092	0.01198	0.00934	0.01152	0.01092
0.01093	0.01125	0.01219	0.00915	0.01245	0.01116
0.01058	0.01111	0.01211	0.00925	0.01205	0.01113
0.01075	0.01110	0.01262	0.00931	0.01240	0.01127
0.01088	0.01116	0.01192	0.00947	0.01195	0.01130
0.01125	0.01127	0.01266	0.00945	0.01244	0.01131
0.01104	0.01168	0.01248	0.00958	0.01183	0.01141
0.01142	0.01117	0.01271	0.00952	0.01270	0.01167
0.01098	0.01167	0.01262	0.00988	0.01223	0.01182
0.01132	0.01156	0.01251	0.00943	0.01274	0.01175
0.01126	0.01180	0.01268	0.00984	0.01237	0.01187
0.01135	0.01142	0.01305	0.00966	0.01261	0.01181
0.01127	0.01213	0.01289	0.01007	0.01302	0.01222
0.01178	0.01148	0.01312	0.00962	0.01288	0.01180
0.01152	0.01197	0.01299	0.01007	0.01279	0.01218
0.01201	0.01181	0.01323	0.01020	0.01345	0.01218
0.01175	0.01202	0.01328	0.01043	0.01315	0.01227
0.01196	0.01193	0.01358	0.01041	0.01369	0.01238
0.01167	0.01195	0.01310	0.01060	0.01328	0.01267
0.01215	0.01236	0.01353	0.00970	0.01379	0.01215
0.01199	0.01261	0.01347	0.01093	0.01359	0.01273
0.01233	0.01222	0.01364	0.01039	0.01371	0.01266
0.01187	0.01236	0.01354	0.01059	0.01393	0.01273
0.01265	0.01229	0.01384	0.01057	0.01421	0.01267
0.01224	0.01257	0.01374	0.01082	0.01395	0.01302
0.01272	0.01227	0.01396	0.01060	0.01423	0.01276
0.01236	0.01278	0.01407	0.01139	0.01419	0.01324
0.01286	0.01251	0.01377	0.01051	0.01417	0.01270
0.01245	0.01297	0.01404	0.01144	0.01448	0.01316
0.01298	0.01277	0.01404	0.01092	0.01437	0.01326
0.01259	0.01283	0.01427	0.01100	0.01472	0.01338
0.01336	0.01281	0.01471	0.01135	0.01468	0.01318
0.01272	0.01326	0.01477	0.01144	0.01506	0.01348
0.01342	0.01305	0.01427	0.01142	0.01472	0.01313
0.01309	0.01357	0.01489	0.01171	0.01498	0.01346
0.01320	0.01316	0.01454	0.01085	0.01456	0.01368
0.01290	0.01343	0.01503	0.01151	0.01542	0.01353
0.01361	0.01328	0.01475	0.01145	0.01478	0.01373
0.01333	0.01381	0.01501	0.01169	0.01564	0.01385
0.01359	0.01345	0.01478	0.01170	0.01538	0.01388
0.01353	0.01390	0.01526	0.01205	0.01567	0.01374
0.01370	0.01344	0.01515	0.01155	0.01535	0.01403
0.01377	0.01375	0.01528	0.01200	0.01560	0.01428
0.01359	0.01350	0.01502	0.01211	0.01527	0.01417
0.01380	0.01427	0.01559	0.01213	0.01580	0.01389
0.01372	0.01375	0.01510	0.01186	0.01548	0.01438
0.01369	0.01447	0.01570	0.01213	0.01585	0.01406

0.01432	0.01356	0.01565	0.01223	0.01557	0.01459
0.01405	0.01407	0.01583	0.01209	0.01605	0.01432
0.01436	0.01413	0.01562	0.01237	0.01561	0.01461
0.01421	0.01455	0.01621	0.01268	0.01624	0.01459
0.01455	0.01449	0.01558	0.01211	0.01566	0.01492
0.01452	0.01464	0.01651	0.01197	0.01642	0.01477
0.01459	0.01466	0.01623	0.01248	0.01626	0.01467
0.01436	0.01498	0.01627	0.01247	0.01656	0.01463
0.01454	0.01453	0.01628	0.01269	0.01630	0.01525
0.01494	0.01525	0.01608	0.01319	0.01637	0.01476
0.01467	0.01503	0.01640	0.01300	0.01624	0.01515
0.01496	0.01535	0.01644	0.01310	0.01670	0.01519
0.01503	0.01485	0.01659	0.01325	0.01647	0.01586
0.01505	0.01529	0.01665	0.01281	0.01695	0.01529
0.01506	0.01525	0.01659	0.01360	0.01673	0.01573
0.01533	0.01557	0.01733	0.01333	0.01712	0.01528
0.01569	0.01518	0.01653	0.01386	0.01675	0.01545
0.01526	0.01555	0.01714	0.01310	0.01713	0.01531
0.01509	0.01553	0.01666	0.01376	0.01698	0.01588
0.01561	0.01571	0.01755	0.01368	0.01740	0.01575
0.01529	0.01563	0.01700	0.01355	0.01695	0.01609
0.01561	0.01585	0.01776	0.01414	0.01740	0.01586
0.01572	0.01555	0.01686	0.01414	0.01729	0.01617
0.01589	0.01606	0.01767	0.01363	0.01757	0.01612
0.01582	0.01586	0.01734	0.01436	0.01783	0.01581
0.01626	0.01629	0.01764	0.01427	0.01757	0.01603
0.01584	0.01593	0.01774	0.01434	0.01801	0.01619
0.01597	0.01620	0.01832	0.01423	0.01760	0.01611
0.01630	0.01632	0.01751	0.01457	0.01786	0.01673
0.01608	0.01643	0.01802	0.01422	0.01775	0.01648
0.01631	0.01634	0.01799	0.01482	0.01842	0.01649
0.01674	0.01671	0.01774	0.01404	0.01839	0.01690
0.01640	0.01652	0.01803	0.01450	0.01829	0.01710
0.01672	0.01643	0.01806	0.01482	0.01821	0.01677
0.01658	0.01647	0.01835	0.01490	0.01844	0.01685
0.01703	0.01694	0.01826	0.01470	0.01834	0.01711
0.01662	0.01704	0.01852	0.01576	0.01851	0.01735
0.01720	0.01714	0.01851	0.01479	0.01906	0.01688
0.01653	0.01696	0.01865	0.01520	0.01896	0.01721
0.01701	0.01727	0.01852	0.01483	0.01911	0.01742
0.01700	0.01724	0.01855	0.01511	0.01922	0.01706
0.01718	0.01724	0.01870	0.01510	0.01881	0.01700
0.01717	0.01755	0.01884	0.01588	0.01961	0.01722
0.01755	0.01746	0.01915	0.01513	0.01895	0.01779
0.01709	0.01739	0.01913	0.01575	0.01954	0.01770
0.01734	0.01764	0.01903	0.01571	0.01943	0.01819
0.01714	0.01774	0.01902	0.01614	0.01951	0.01723
0.01776	0.01767	0.01924	0.01543	0.01938	0.01787
0.01775	0.01811	0.01933	0.01592	0.02010	0.01753
0.01796	0.01803	0.01959	0.01633	0.01963	0.01773
0.01759	0.01774	0.01952	0.01615	0.02034	0.01733
0.01795	0.01811	0.01910	0.01632	0.02010	0.01800
0.01798	0.01815	0.01960	0.01614	0.02033	0.01794
0.01839	0.01808	0.01943	0.01631	0.01993	0.01806
0.01778	0.01850	0.01988	0.01634	0.02033	0.01762
0.01839	0.01833	0.01973	0.01639	0.02004	0.01845
0.01839	0.01876	0.02011	0.01673	0.02070	0.01802

0.01847	0.01841	0.01980	0.01669	0.02031	0.01832
0.01830	0.01855	0.01996	0.01643	0.02060	0.01853
0.01889	0.01871	0.01969	0.01688	0.02058	0.01865
0.01842	0.01884	0.02051	0.01663	0.02078	0.01889
0.01878	0.01857	0.02001	0.01689	0.02072	0.01881
0.01859	0.01916	0.02051	0.01701	0.02129	0.01887
0.01883	0.01880	0.02010	0.01727	0.02077	0.01948
0.01878	0.01937	0.02058	0.01690	0.02134	0.01851
0.01949	0.01884	0.02048	0.01717	0.02075	0.01945
0.01894	0.01957	0.02103	0.01732	0.02132	0.01903
0.01925	0.01915	0.02040	0.01753	0.02147	0.01952
0.01901	0.01924	0.02126	0.01682	0.02126	0.01963
0.01918	0.01935	0.02071	0.01788	0.02148	0.01980
0.01932	0.01976	0.02129	0.01729	0.02188	0.01952
0.01962	0.01960	0.02080	0.01783	0.02128	0.02020
0.01959	0.01974	0.02136	0.01793	0.02180	0.01954
0.01993	0.01962	0.02086	0.01792	0.02168	0.02011
0.01961	0.01981	0.02158	0.01774	0.02213	0.02000
0.01957	0.02023	0.02147	0.01817	0.02183	0.02026
0.01940	0.02014	0.02155	0.01793	0.02230	0.02055
0.02005	0.02032	0.02147	0.01854	0.02165	0.02028
0.01978	0.02024	0.02184	0.01824	0.02194	0.02023
0.02007	0.02020	0.02134	0.01850	0.02230	0.02033
0.02006	0.02027	0.02184	0.01825	0.02240	0.02059
0.02050	0.02030	0.02168	0.01844	0.02220	0.02074
0.01995	0.02085	0.02205	0.01827	0.02249	0.02073
0.02049	0.02059	0.02164	0.01892	0.02235	0.02092
0.02031	0.02075	0.02194	0.01864	0.02247	0.02106
0.02049	0.02051	0.02171	0.01889	0.02302	0.02114
0.02045	0.02106	0.02212	0.01887	0.02251	0.02085
0.02091	0.02067	0.02220	0.01909	0.02317	0.02104
0.02054	0.02104	0.02213	0.01913	0.02290	0.02126
0.02080	0.02067	0.02224	0.01918	0.02378	0.02100
0.02080	0.02130	0.02266	0.01876	0.02291	0.02111
0.02090	0.02134	0.02237	0.01934	0.02349	0.02134
0.02068	0.02129	0.02271	0.01882	0.02296	0.02124
0.02097	0.02114	0.02243	0.01931	0.02336	0.02178
0.02051	0.02124	0.02278	0.01913	0.02339	0.02150
0.02118	0.02124	0.02280	0.01913	0.02389	0.02164
0.02113	0.02171	0.02258	0.01958	0.02351	0.02192
0.02141	0.02146	0.02325	0.01946	0.02407	0.02185
0.02143	0.02197	0.02267	0.01984	0.02384	0.02196
0.02179	0.02178	0.02314	0.01969	0.02426	0.02208
0.02153	0.02201	0.02309	0.01970	0.02363	0.02235
0.02185	0.02176	0.02348	0.01989	0.02445	0.02213
0.02155	0.02232	0.02329	0.01973	0.02317	0.02239
0.02167	0.02207	0.02358	0.01984	0.02428	0.02261
0.02194	0.02208	0.02345	0.02016	0.02394	0.02278
0.02203	0.02190	0.02365	0.02012	0.02423	0.02198
0.02191	0.02267	0.02351	0.02029	0.02411	0.02264
0.02195	0.02232	0.02376	0.01973	0.02428	0.02244
0.02186	0.02223	0.02375	0.02031	0.02476	0.02293
0.02216	0.02237	0.02411	0.02037	0.02490	0.02247
0.02168	0.02252	0.02387	0.02078	0.02479	0.02325
0.02243	0.02257	0.02442	0.02042	0.02527	0.02283
0.02254	0.02263	0.02392	0.02062	0.02485	0.02334
0.02252	0.02287	0.02448	0.02059	0.02535	0.02249

0.02238	0.02286	0.02418	0.02123	0.02455	0.02337
0.02270	0.02300	0.02493	0.02073	0.02544	0.02308
0.02281	0.02284	0.02406	0.02116	0.02533	0.02352
0.02301	0.02324	0.02489	0.02095	0.02574	0.02311
0.02287	0.02321	0.02442	0.02107	0.02548	0.02373
0.02296	0.02337	0.02469	0.02084	0.02562	0.02344
0.02304	0.02340	0.02478	0.02159	0.02566	0.02375
0.02330	0.02355	0.02500	0.02123	0.02559	0.02365
0.02324	0.02333	0.02484	0.02149	0.02606	0.02441
0.02342	0.02372	0.02504	0.02132	0.02566	0.02384
0.02315	0.02370	0.02475	0.02160	0.02568	0.02438
0.02391	0.02384	0.02538	0.02105	0.02633	0.02417
0.02371	0.02373	0.02498	0.02185	0.02603	0.02424
0.02362	0.02423	0.02567	0.02168	0.02634	0.02424
0.02356	0.02386	0.02528	0.02199	0.02646	0.02438
0.02381	0.02401	0.02550	0.02168	0.02651	0.02409
0.02401	0.02399	0.02539	0.02201	0.02595	0.02428
0.02402	0.02451	0.02572	0.02193	0.02599	0.02449
0.02422	0.02414	0.02583	0.02201	0.02686	0.02478
0.02444	0.02432	0.02589	0.02186	0.02678	0.02485
0.02421	0.02431	0.02565	0.02247	0.02680	0.02502
0.02363	0.02475	0.02596	0.02192	0.02708	0.02511
0.02421	0.02424	0.02578	0.02260	0.02723	0.02509
0.02396	0.02481	0.02614	0.02253	0.02732	0.02523
0.02390	0.02451	0.02565	0.02257	0.02770	0.02458
0.02436	0.02479	0.02635	0.02257	0.02664	0.02518
0.02474	0.02463	0.02608	0.02248	0.02748	0.02477
0.02498	0.02492	0.02666	0.02274	0.02777	0.02535
0.02518	0.02473	0.02646	0.02259	0.02782	0.02527
0.02500	0.02520	0.02645	0.02287	0.02721	0.02540
0.02526	0.02481	0.02638	0.02281	0.02749	0.02541
0.02505	0.02543	0.02671	0.02304	0.02753	0.02549
0.02548	0.02513	0.02667	0.02263	0.02732	0.02551
0.02518	0.02560	0.02675	0.02323	0.02782	0.02530
0.02533	0.02511	0.02677	0.02279	0.02791	0.02544
0.02514	0.02576	0.02700	0.02359	0.02819	0.02549
0.02570	0.02537	0.02679	0.02415	0.02832	0.02564
0.02526	0.02554	0.02702	0.02444	0.02806	0.02600
0.02609	0.02538	0.02703	0.02467	0.02797	0.02642
0.02565	0.02597	0.02740	0.02507	0.02840	0.02585
0.02605	0.02556	0.02736	0.02483	0.02875	0.02636
0.02546	0.02624	0.02752	0.02500	0.02869	0.02661
0.02608	0.02583	0.02757	0.02478	0.02915	0.02643
0.02599	0.02593	0.02747	0.02508	0.02856	0.02679
0.02586	0.02576	0.02739	0.02496	0.02879	0.02610
0.02611	0.02636	0.02779	0.02538	0.02887	0.02678
0.02576	0.02627	0.02784	0.02511	0.02917	0.02614
0.02610	0.02657	0.02780	0.02520	0.02860	0.02667
0.02657	0.02646	0.02809	0.02519	0.02929	0.02608
0.02614	0.02679	0.02758	0.02569	0.02934	0.02715
0.02697	0.02678	0.02818	0.02535	0.02930	0.02698
0.02640	0.02681	0.02828	0.02566	0.02883	0.02654
0.02683	0.02654	0.02819	0.02556	0.02953	0.02682
0.02687	0.02692	0.02829	0.02595	0.02934	0.02698
0.02719	0.02648	0.02854	0.02579	0.02956	0.02727
0.02705	0.02713	0.02842	0.02605	0.02949	0.02761
0.02704	0.02679	0.02856	0.02590	0.03001	0.02731

0.02695	0.02729	0.02836	0.02614	0.02960	0.02714
0.02708	0.02675	0.02847	0.02608	0.03012	0.02740
0.02729	0.02734	0.02859	0.02641	0.02962	0.02738
0.02781	0.02743	0.02884	0.02606	0.03002	0.02797
0.02734	0.02775	0.02881	0.02652	0.02999	0.02726
0.02753	0.02768	0.02925	0.02649	0.03029	0.02803
0.02761	0.02758	0.02894	0.02654	0.03006	0.02737
0.02768	0.02759	0.02915	0.02621	0.03031	0.02809
0.02754	0.02794	0.02914	0.02673	0.02996	0.02793
0.02769	0.02774	0.02943	0.02694	0.03031	0.02838
0.02777	0.02800	0.02905	0.02625	0.03026	0.02842
0.02809	0.02795	0.02959	0.02660	0.03059	0.02838
0.02815	0.02804	0.02929	0.02711	0.03028	0.02850
0.02825	0.02830	0.02998	0.02687	0.03066	0.02879
0.02807	0.02796	0.02909	0.02699	0.03090	0.02867
0.02843	0.02842	0.02968	0.02715	0.03080	0.02894
0.02816	0.02834	0.02928	0.02719	0.03052	0.02887
0.02867	0.02838	0.02997	0.02693	0.03087	0.02863
0.02870	0.02837	0.02961	0.02725	0.03112	0.02879
0.02861	0.02827	0.03029	0.02727	0.03125	0.02900
0.02848	0.02838	0.02990	0.02703	0.03111	0.02907
0.02889	0.02893	0.03003	0.02742	0.03131	0.02866
0.02885	0.02852	0.02993	0.02726	0.03141	0.02887
0.02912	0.02891	0.03052	0.02795	0.03138	0.02944
0.02882	0.02900	0.03042	0.02755	0.03166	0.02920
0.02918	0.02873	0.03048	0.02762	0.03191	0.02952
0.02898	0.02884	0.03050	0.02756	0.03147	0.02928
0.02936	0.02920	0.03088	0.02806	0.03197	0.02940
0.02919	0.02940	0.03081	0.02820	0.03178	0.02991
0.02969	0.02962	0.03037	0.02822	0.03196	0.02990
0.02955	0.02917	0.03052	0.02791	0.03188	0.02980
0.02987	0.02949	0.03053	0.02810	0.03199	0.03015
0.02964	0.02925	0.03057	0.02801	0.03221	0.03005
0.03008	0.02992	0.03111	0.02808	0.03217	0.02996
0.02970	0.02970	0.03077	0.02813	0.03231	0.02999
0.02992	0.02962	0.03086	0.02847	0.03229	0.03009
0.03014	0.02988	0.03104	0.02804	0.03234	0.03044
0.03010	0.02991	0.03119	0.02854	0.03243	0.03030
0.03019	0.02993	0.03124	0.02835	0.03282	0.03012
0.02989	0.03022	0.03160	0.02850	0.03262	0.03036
0.03014	0.02991	0.03146	0.02874	0.03280	0.03074
0.03038	0.03011	0.03164	0.02872	0.03269	0.03071
0.03023	0.02984	0.03120	0.02867	0.03299	0.03077
0.03062	0.03043	0.03188	0.02911	0.03318	0.03077
0.03079	0.03004	0.03143	0.02885	0.03292	0.03115
0.03057	0.03071	0.03167	0.02915	0.03322	0.03057
0.03057	0.03007	0.03220	0.02923	0.03328	0.03121
0.03079	0.03060	0.03170	0.02944	0.03289	0.03098
0.03119	0.03074	0.03204	0.02896	0.03361	0.03113
0.03112	0.03118	0.03195	0.02975	0.03347	0.03110
0.03102	0.03057	0.03186	0.02944	0.03384	0.03137
0.03089	0.03109	0.03226	0.02972	0.03351	0.03145
0.03114	0.03079	0.03258	0.02959	0.03373	0.03166
0.03110	0.03131	0.03218	0.02972	0.03336	0.03142
0.03178	0.03088	0.03228	0.02978	0.03376	0.03196
0.03151	0.03148	0.03250	0.02988	0.03341	0.03156
0.03162	0.03127	0.03251	0.02941	0.03389	0.03229

0.03149	0.03139	0.03233	0.03006	0.03361	0.03176
0.03229	0.03139	0.03312	0.02993	0.03399	0.03230
0.03158	0.03153	0.03277	0.03000	0.03392	0.03204
0.03193	0.03144	0.03280	0.03012	0.03430	0.03203
0.03225	0.03168	0.03288	0.03039	0.03396	0.03198
0.03230	0.03151	0.03316	0.02996	0.03459	0.03235
0.03256	0.03226	0.03283	0.03043	0.03427	0.03236
0.03264	0.03158	0.03316	0.03058	0.03468	0.03269
0.03226	0.03201	0.03281	0.03057	0.03436	0.03241
0.03276	0.03213	0.03344	0.03069	0.03473	0.03264
0.03261	0.03241	0.03336	0.03049	0.03435	0.03273
0.03282	0.03209	0.03353	0.03080	0.03467	0.03293
0.03258	0.03241	0.03317	0.03077	0.03458	0.03279
0.03288	0.03239	0.03357	0.03075	0.03497	0.03297
0.03295	0.03232	0.03329	0.03090	0.03476	0.03298
0.03337	0.03232	0.03423	0.03072	0.03512	0.03298
0.03319	0.03278	0.03380	0.03093	0.03526	0.03317
0.03326	0.03248	0.03386	0.03113	0.03517	0.03320
0.03344	0.03294	0.03385	0.03090	0.03495	0.03316
0.03336	0.03250	0.03424	0.03139	0.03553	0.03314
0.03310	0.03292	0.03412	0.03104	0.03519	0.03327
0.03387	0.03322	0.03443	0.03163	0.03555	0.03318
0.03334	0.03299	0.03380	0.03083	0.03562	0.03337
0.03378	0.03312	0.03454	0.03153	0.03553	0.03307
0.03366	0.03289	0.03436	0.03160	0.03564	0.03366
0.03389	0.03296	0.03459	0.03181	0.03572	0.03340
0.03396	0.03329	0.03478	0.03168	0.03605	0.03386
0.03400	0.03325	0.03472	0.03202	0.03579	0.03361
0.03382	0.03342	0.03453	0.03164	0.03603	0.03417
0.03424	0.03337	0.03473	0.03216	0.03616	0.03406
0.03407	0.03350	0.03485	0.03193	0.03630	0.03407
0.03442	0.03360	0.03484	0.03233	0.03651	0.03385
0.03401	0.03342	0.03483	0.03191	0.03630	0.03397
0.03441	0.03390	0.03513	0.03242	0.03618	0.03428
0.03434	0.03394	0.03502	0.03204	0.03669	0.03405
0.03451	0.03392	0.03521	0.03234	0.03624	0.03441
0.03440	0.03386	0.03523	0.03240	0.03700	0.03442
0.03473	0.03425	0.03557	0.03253	0.03613	0.03446
0.03471	0.03389	0.03554	0.03228	0.03698	0.03476
0.03482	0.03446	0.03598	0.03280	0.03659	0.03495
0.03489	0.03415	0.03545	0.03243	0.03725	0.03461
0.03527	0.03462	0.03590	0.03311	0.03688	0.03500
0.03536	0.03425	0.03575	0.03286	0.03702	0.03498
0.03562	0.03465	0.03581	0.03301	0.03677	0.03491
0.03533	0.03475	0.03579	0.03292	0.03738	0.03477
0.03552	0.03474	0.03589	0.03316	0.03703	0.03492
0.03547	0.03469	0.03579	0.03311	0.03745	0.03528
0.03577	0.03481	0.03603	0.03311	0.03685	0.03520
0.03557	0.03473	0.03589	0.03282	0.03743	0.03565
0.03596	0.03504	0.03601	0.03360	0.03737	0.03526
0.03562	0.03507	0.03610	0.03327	0.03765	0.03589
0.03621	0.03535	0.03652	0.03345	0.03751	0.03510
0.03605	0.03511	0.03659	0.03403	0.03790	0.03570
0.03636	0.03562	0.03662	0.03335	0.03796	0.03579
0.03620	0.03530	0.03665	0.03370	0.03792	0.03591
0.03607	0.03545	0.03649	0.03374	0.03767	0.03582
0.03596	0.03535	0.03639	0.03400	0.03793	0.03605

0.03639	0.03591	0.03674	0.03393	0.03780	0.03594
0.03605	0.03523	0.03700	0.03373	0.03818	0.03561
0.03651	0.03566	0.03685	0.03381	0.03789	0.03626
0.03656	0.03580	0.03702	0.03375	0.03872	0.03643
0.03657	0.03629	0.03724	0.03442	0.03829	0.03647
0.03665	0.03580	0.03748	0.03411	0.03873	0.03635
0.03713	0.03645	0.03692	0.03426	0.03809	0.03671
0.03670	0.03606	0.03749	0.03421	0.03900	0.03670
0.03699	0.03631	0.03705	0.03457	0.03874	0.03658
0.03727	0.03624	0.03787	0.03462	0.03880	0.03685
0.03721	0.03650	0.03779	0.03479	0.03892	0.03655
0.03655	0.03630	0.03784	0.03440	0.03896	0.03685
0.03726	0.03666	0.03755	0.03473	0.03872	0.03689
0.03750	0.03639	0.03778	0.03474	0.03927	0.03718
0.03785	0.03702	0.03770	0.03500	0.03919	0.03715
0.03705	0.03665	0.03808	0.03500	0.03949	0.03724
0.03777	0.03697	0.03792	0.03502	0.03910	0.03716
0.03760	0.03694	0.03832	0.03514	0.03965	0.03733
0.03797	0.03701	0.03788	0.03520	0.03907	0.03744
0.03780	0.03703	0.03833	0.03496	0.03948	0.03780
0.03792	0.03727	0.03795	0.03461	0.03965	0.03760
0.03826	0.03676	0.03847	0.03539	0.03963	0.03765
0.03806	0.03754	0.03843	0.03504	0.03935	0.03787
0.03799	0.03726	0.03889	0.03539	0.03985	0.03785
0.03825	0.03762	0.03820	0.03543	0.03978	0.03807
0.03830	0.03756	0.03851	0.03573	0.04007	0.03804
0.03840	0.03739	0.03861	0.03550	0.04069	0.03824
0.03848	0.03765	0.03867	0.03579	0.04005	0.03819
0.03887	0.03796	0.03885	0.03571	0.03989	0.03813
0.03886	0.03762	0.03880	0.03600	0.04072	0.03811
0.03856	0.03777	0.03887	0.03567	0.04047	0.03799
0.03871	0.03775	0.03928	0.03618	0.04032	0.03824
0.03880	0.03814	0.03919	0.03600	0.04038	0.03853
0.03924	0.03794	0.03958	0.03607	0.04041	0.03849
0.03914	0.03812	0.03897	0.03638	0.04113	0.03898
0.03923	0.03809	0.03931	0.03642	0.04082	0.03882
0.03868	0.03851	0.03899	0.03630	0.04021	0.03905
0.03909	0.03798	0.03952	0.03669	0.04048	0.03873
0.03922	0.03812	0.03900	0.03637	0.04124	0.03915
0.03978	0.03869	0.03992	0.03673	0.04064	0.03905
0.03946	0.03870	0.03959	0.03637	0.04080	0.03926
0.03976	0.03860	0.04008	0.03676	0.04115	0.03910
0.03948	0.03860	0.03981	0.03651	0.04116	0.03953
0.03952	0.03888	0.04032	0.03684	0.04113	0.03911
0.04006	0.03916	0.03999	0.03673	0.04147	0.03907
0.04000	0.03881	0.04026	0.03697	0.04141	0.03924
0.04003	0.03891	0.04001	0.03692	0.04169	0.03940
0.03983	0.03924	0.04043	0.03718	0.04152	0.03932
0.03965	0.03894	0.04013	0.03718	0.04169	0.03937
0.04035	0.03944	0.04057	0.03749	0.04139	0.03965
0.04002	0.03907	0.04038	0.03731	0.04217	0.03978
0.04044	0.03940	0.04072	0.03731	0.04170	0.03977
0.04029	0.03936	0.04057	0.03751	0.04239	0.04008
0.04061	0.03924	0.04089	0.03765	0.04171	0.03999
0.04059	0.03928	0.04105	0.03772	0.04222	0.04030
0.04056	0.03971	0.04093	0.03763	0.04189	0.03982
0.04053	0.03974	0.04101	0.03790	0.04227	0.04062

0.04109	0.03953	0.04113	0.03781	0.04214	0.04002
0.04049	0.03993	0.04084	0.03810	0.04255	0.04031
0.04129	0.04028	0.04135	0.03800	0.04230	0.04062
0.04112	0.04025	0.04148	0.03773	0.04236	0.04076
0.04113	0.04003	0.04119	0.03807	0.04275	0.03999
0.04105	0.04016	0.04145	0.03809	0.04288	0.04050
0.04121	0.04044	0.04158	0.03793	0.04272	0.04043
0.04149	0.04032	0.04169	0.03869	0.04325	0.04093
0.04153	0.04033	0.04163	0.03825	0.04250	0.04090
0.04106	0.04047	0.04138	0.03849	0.04299	0.04109
0.04164	0.04068	0.04136	0.03851	0.04309	0.04062
0.04144	0.04054	0.04204	0.03872	0.04320	0.04114
0.04191	0.04083	0.04176	0.03863	0.04331	0.04122
0.04128	0.04080	0.04222	0.03861	0.04338	0.04122
0.04196	0.04100	0.04209	0.03887	0.04322	0.04133
0.04158	0.04092	0.04250	0.03900	0.04345	0.04158
0.04218	0.04095	0.04236	0.03868	0.04329	0.04176
0.04208	0.04111	0.04262	0.03927	0.04359	0.04121
0.04217	0.04131	0.04223	0.03911	0.04321	0.04170
0.04206	0.04119	0.04247	0.03912	0.04395	0.04143
0.04245	0.04139	0.04226	0.03926	0.04389	0.04182
0.04228	0.04125	0.04305	0.03927	0.04400	0.04177
0.04266	0.04167	0.04252	0.03952	0.04386	0.04177
0.04238	0.04135	0.04289	0.03931	0.04378	0.04193
0.04252	0.04187	0.04274	0.03940	0.04417	0.04208
0.04234	0.04191	0.04305	0.03961	0.04389	0.04230
0.04253	0.04177	0.04282	0.03953	0.04431	0.04246
0.04316	0.04193	0.04323	0.03977	0.04453	0.04251
0.04304	0.04176	0.04267	0.03944	0.04408	0.04270
0.04344	0.04209	0.04310	0.04007	0.04424	0.04234
0.04310	0.04242	0.04273	0.03974	0.04442	0.04247
0.04317	0.04214	0.04371	0.04048	0.04452	0.04240
0.04328	0.04261	0.04354	0.04006	0.04466	0.04282
0.04336	0.04245	0.04376	0.04022	0.04460	0.04257
0.04320	0.04245	0.04343	0.04016	0.04516	0.04295
0.04342	0.04239	0.04376	0.04036	0.04472	0.04283
0.04346	0.04244	0.04366	0.03990	0.04531	0.04283
0.04410	0.04252	0.04387	0.04054	0.04485	0.04309
0.04352	0.04286	0.04350	0.04060	0.04535	0.04330
0.04379	0.04269	0.04389	0.04089	0.04487	0.04301
0.04388	0.04289	0.04403	0.04034	0.04476	0.04337
0.04378	0.04309	0.04401	0.04063	0.04516	0.04321
0.04386	0.04318	0.04427	0.04094	0.04573	0.04344
0.04417	0.04262	0.04444	0.04055	0.04513	0.04298
0.04352	0.04310	0.04412	0.04026	0.04530	0.04347
0.04416	0.04313	0.04414	0.04120	0.04536	0.04339
0.04396	0.04331	0.04433	0.04105	0.04581	0.04407
0.04424	0.04346	0.04449	0.04122	0.04575	0.04373
0.04409	0.04380	0.04471	0.04094	0.04622	0.04422
0.04476	0.04350	0.04449	0.04113	0.04602	0.04385
0.04462	0.04373	0.04466	0.04089	0.04620	0.04384
0.04492	0.04325	0.04514	0.04111	0.04612	0.04419
0.04474	0.04380	0.04500	0.04156	0.04606	0.04410
0.04474	0.04355	0.04507	0.04171	0.04578	0.04375
0.04478	0.04418	0.04496	0.04128	0.04654	0.04421
0.04503	0.04384	0.04507	0.04181	0.04598	0.04434
0.04490	0.04400	0.04506	0.04165	0.04636	0.04448

0.04521	0.04417	0.04522	0.04201	0.04637	0.04451
0.04484	0.04408	0.04543	0.04181	0.04682	0.04431
0.04565	0.04390	0.04557	0.04178	0.04656	0.04423
0.04526	0.04432	0.04553	0.04176	0.04645	0.04487
0.04529	0.04429	0.04565	0.04236	0.04644	0.04466
0.04516	0.04459	0.04608	0.04224	0.04704	0.04471
0.04569	0.04434	0.04613	0.04165	0.04682	0.04452
0.04563	0.04453	0.04592	0.04229	0.04742	0.04432
0.04577	0.04460	0.04592	0.04243	0.04654	0.04497
0.04572	0.04446	0.04586	0.04226	0.04701	0.04480
0.04615	0.04471	0.04638	0.04247	0.04672	0.04552
0.04594	0.04454	0.04642	0.04264	0.04677	0.04491
0.04631	0.04502	0.04621	0.04243	0.04725	0.04533
0.04605	0.04508	0.04658	0.04259	0.04749	0.04503
0.04619	0.04519	0.04631	0.04279	0.04710	0.04546
0.04613	0.04553	0.04686	0.04310	0.04766	0.04517
0.04658	0.04534	0.04662	0.04279	0.04718	0.04572
0.04636	0.04536	0.04666	0.04317	0.04794	0.04550
0.04670	0.04554	0.04633	0.04285	0.04775	0.04603
0.04686	0.04561	0.04670	0.04302	0.04742	0.04505
0.04699	0.04593	0.04704	0.04325	0.04792	0.04589
0.04651	0.04556	0.04692	0.04334	0.04760	0.04534
0.04668	0.04587	0.04678	0.04295	0.04772	0.04605
0.04688	0.04578	0.04734	0.04386	0.04792	0.04580
0.04714	0.04568	0.04682	0.04335	0.04857	0.04642
0.04713	0.04530	0.04732	0.04346	0.04833	0.04577
0.04706	0.04585	0.04705	0.04337	0.04827	0.04645
0.04727	0.04597	0.04752	0.04417	0.04848	0.04605
0.04746	0.04612	0.04712	0.04338	0.04859	0.04639
0.04741	0.04642	0.04744	0.04357	0.04817	0.04646
0.04719	0.04664	0.04737	0.04404	0.04826	0.04682
0.04727	0.04636	0.04732	0.04444	0.04852	0.04644
0.04772	0.04642	0.04704	0.04384	0.04894	0.04689
0.04738	0.04673	0.04810	0.04450	0.04839	0.04656
0.04767	0.04673	0.04788	0.04417	0.04883	0.04679
0.04798	0.04691	0.04817	0.04469	0.04893	0.04672
0.04789	0.04666	0.04769	0.04423	0.04922	0.04707
0.04778	0.04703	0.04800	0.04425	0.04908	0.04700
0.04786	0.04702	0.04801	0.04441	0.04947	0.04731
0.04795	0.04661	0.04832	0.04486	0.04917	0.04731
0.04770	0.04726	0.04828	0.04466	0.04978	0.04742
0.04775	0.04743	0.04832	0.04473	0.04906	0.04765
0.04842	0.04758	0.04810	0.04487	0.04887	0.04767
0.04825	0.04683	0.04857	0.04478	0.04925	0.04772
0.04831	0.04761	0.04837	0.04456	0.04981	0.04757
0.04875	0.04771	0.04893	0.04472	0.04983	0.04764
0.04873	0.04755	0.04867	0.04517	0.05001	0.04773
0.04857	0.04782	0.04909	0.04495	0.04992	0.04795
0.04877	0.04784	0.04881	0.04459	0.05021	0.04802
0.04892	0.04753	0.04888	0.04524	0.04933	0.04814
0.04891	0.04821	0.04924	0.04529	0.04998	0.04834
0.04889	0.04779	0.04933	0.04500	0.05002	0.04846
0.04907	0.04791	0.04890	0.04529	0.05046	0.04796
0.04898	0.04791	0.04895	0.04595	0.04996	0.04834
0.04887	0.04807	0.04910	0.04576	0.05019	0.04846
0.04943	0.04824	0.04969	0.04554	0.05036	0.04866
0.04927	0.04834	0.04941	0.04574	0.05077	0.04841

0.04937	0.04834	0.04944	0.04550	0.05004	0.04881
0.04957	0.04865	0.04991	0.04586	0.05075	0.04841
0.04967	0.04829	0.04982	0.04601	0.05039	0.04872
0.04986	0.04881	0.04988	0.04630	0.05098	0.04877
0.04992	0.04851	0.04961	0.04579	0.05087	0.04890
0.04954	0.04868	0.05001	0.04629	0.05128	0.04894
0.05014	0.04869	0.05001	0.04596	0.05040	0.04926
0.04985	0.04874	0.05015	0.04622	0.05110	0.04892
0.04969	0.04908	0.05010	0.04616	0.05117	0.04901
0.05028	0.04909	0.05028	0.04673	0.05141	0.04891
0.05014	0.04891	0.05028	0.04637	0.05106	0.04914
0.05016	0.04954	0.05029	0.04637	0.05169	0.04928
0.05028	0.04943	0.05015	0.04637	0.05144	0.04902
0.05003	0.04981	0.05033	0.04680	0.05144	0.04955
0.05057	0.04957	0.05030	0.04673	0.05164	0.04932
0.05036	0.04962	0.05093	0.04695	0.05195	0.04936
0.05064	0.04935	0.05077	0.04687	0.05202	0.04932
0.05072	0.04988	0.05108	0.04682	0.05206	0.04971
0.05065	0.04971	0.05050	0.04732	0.05193	0.04997
0.05078	0.05006	0.05135	0.04738	0.05212	0.04989
0.05098	0.04990	0.05069	0.04693	0.05181	0.04990
0.05098	0.05001	0.05106	0.04726	0.05190	0.05006
0.05103	0.05004	0.05098	0.04740	0.05161	0.04972
0.05089	0.05007	0.05138	0.04777	0.05271	0.05019
0.05130	0.04993	0.05136	0.04715	0.05219	0.05030
0.05104	0.05039	0.05110	0.04788	0.05205	0.05041
0.05096	0.05041	0.05130	0.04762	0.05211	0.05053
0.05159	0.05071	0.05180	0.04773	0.05260	0.05018
0.05193	0.05031	0.05130	0.04778	0.05289	0.05045
0.05151	0.05027	0.05194	0.04836	0.05224	0.05061
0.05212	0.05055	0.05118	0.04774	0.05291	0.05041
0.05147	0.05052	0.05187	0.04804	0.05311	0.05041
0.05223	0.05100	0.05161	0.04798	0.05267	0.05081
0.05180	0.05082	0.05213	0.04821	0.05226	0.05059
0.05229	0.05107	0.05175	0.04820	0.05312	0.05093
0.05214	0.05097	0.05215	0.04851	0.05291	0.05094
0.05224	0.05105	0.05186	0.04828	0.05294	0.05114
0.05210	0.05099	0.05219	0.04857	0.05301	0.05098
0.05260	0.05136	0.05253	0.04845	0.05359	0.05145
0.05209	0.05126	0.05282	0.04882	0.05309	0.05164
0.05257	0.05135	0.05208	0.04830	0.05343	0.05138
0.05269	0.05143	0.05274	0.04898	0.05332	0.05156
0.05275	0.05177	0.05253	0.04888	0.05381	0.05106
0.05270	0.05164	0.05265	0.04906	0.05341	0.05180
0.05295	0.05156	0.05250	0.04843	0.05360	0.05160
0.05250	0.05186	0.05299	0.04908	0.05397	0.05215
0.05277	0.05199	0.05275	0.04891	0.05346	0.05192
0.05312	0.05215	0.05345	0.04919	0.05344	0.05194
0.05320	0.05207	0.05281	0.04940	0.05435	0.05198
0.05292	0.05209	0.05353	0.04938	0.05376	0.05210
0.05323	0.05226	0.05327	0.04925	0.05333	0.05221
0.05323	0.05223	0.05332	0.04946	0.05363	0.05225
0.05339	0.05234	0.05341	0.04922	0.05471	0.05216
0.05381	0.05212	0.05363	0.04946	0.05460	0.05275
0.05346	0.05262	0.05351	0.04976	0.05489	0.05213
0.05372	0.05259	0.05364	0.04951	0.05455	0.05275
0.05406	0.05280	0.05328	0.04996	0.05417	0.05257

0.05406	0.05227	0.05374	0.04970	0.05389	0.05259
0.05356	0.05236	0.05384	0.04992	0.05424	0.05273
0.05420	0.05264	0.05394	0.04982	0.05459	0.05286
0.05387	0.05304	0.05386	0.04995	0.05429	0.05269
0.05396	0.05272	0.05433	0.05011	0.05466	0.05312
0.05409	0.05300	0.05417	0.05037	0.05494	0.05248
0.05450	0.05303	0.05445	0.05030	0.05489	0.05318
0.05387	0.05310	0.05447	0.05024	0.05480	0.05285
0.05436	0.05320	0.05398	0.04970	0.05519	0.05371
0.05361	0.05333	0.05443	0.04994	0.05516	0.05310
0.05441	0.05319	0.05447	0.05036	0.05560	0.05326
0.05466	0.05357	0.05461	0.05091	0.05558	0.05342
0.05487	0.05370	0.05441	0.05012	0.05565	0.05343
0.05454	0.05347	0.05486	0.05082	0.05494	0.05358
0.05502	0.05337	0.05451	0.05069	0.05485	0.05389
0.05461	0.05361	0.05508	0.05096	0.05562	0.05317
0.05488	0.05389	0.05521	0.05094	0.05605	0.05368
0.05476	0.05411	0.05509	0.05106	0.05515	0.05364
0.05534	0.05400	0.05509	0.05094	0.05568	0.05432
0.05504	0.05409	0.05502	0.05135	0.05604	0.05389
0.05556	0.05429	0.05552	0.05102	0.05635	0.05403
0.05499	0.05437	0.05575	0.05179	0.05639	0.05382
0.05530	0.05406	0.05528	0.05145	0.05644	0.05405
0.05516	0.05441	0.05559	0.05167	0.05632	0.05446
0.05495	0.05401	0.05543	0.05137	0.05649	0.05425
0.05516	0.05426	0.05542	0.05164	0.05666	0.05440
0.05596	0.05461	0.05538	0.05181	0.05650	0.05462
0.05571	0.05452	0.05569	0.05158	0.05593	0.05448
0.05587	0.05448	0.05537	0.05161	0.05626	0.05421
0.05579	0.05491	0.05584	0.05188	0.05624	0.05468
0.05582	0.05502	0.05574	0.05168	0.05629	0.05448
0.05574	0.05510	0.05624	0.05227	0.05624	0.05496
0.05631	0.05463	0.05595	0.05192	0.05709	0.05463
0.05624	0.05537	0.05624	0.05198	0.05629	0.05516
0.05611	0.05500	0.05625	0.05183	0.05685	0.05474
0.05619	0.05519	0.05620	0.05192	0.05661	0.05507
0.05655	0.05526	0.05624	0.05223	0.05706	0.05515
0.05634	0.05546	0.05651	0.05239	0.05644	0.05554
0.05682	0.05510	0.05621	0.05232	0.05683	0.05505
0.05652	0.05543	0.05661	0.05248	0.05725	0.05553
0.05719	0.05559	0.05633	0.05244	0.05715	0.05534
0.05679	0.05570	0.05661	0.05260	0.05721	0.05565
0.05737	0.05563	0.05627	0.05295	0.05691	0.05546
0.05673	0.05562	0.05707	0.05247	0.05721	0.05590
0.05690	0.05578	0.05696	0.05287	0.05801	0.05541
0.05699	0.05584	0.05716	0.05301	0.05703	0.05601
0.05741	0.05612	0.05697	0.05285	0.05749	0.05565
0.05708	0.05640	0.05706	0.05315	0.05788	0.05613
0.05766	0.05637	0.05686	0.05339	0.05760	0.05560
0.05733	0.05632	0.05710	0.05287	0.05795	0.05643
0.05767	0.05657	0.05697	0.05367	0.05839	0.05608
0.05749	0.05645	0.05722	0.05337	0.05829	0.05649
0.05697	0.05634	0.05698	0.05344	0.05828	0.05602
0.05719	0.05644	0.05778	0.05331	0.05762	0.05664
0.05807	0.05661	0.05736	0.05376	0.05794	0.05676
0.05772	0.05702	0.05750	0.05354	0.05743	0.05669
0.05801	0.05682	0.05749	0.05391	0.05784	0.05681

0.05801	0.05695	0.05804	0.05361	0.05793	0.05658
0.05824	0.05710	0.05799	0.05361	0.05844	0.05679
0.05807	0.05689	0.05818	0.05353	0.05845	0.05686
0.05805	0.05702	0.05769	0.05430	0.05814	0.05681
0.05841	0.05733	0.05803	0.05389	0.05798	0.05702
0.05845	0.05739	0.05855	0.05411	0.05861	0.05735
0.05858	0.05727	0.05842	0.05410	0.05869	0.05691
0.05839	0.05727	0.05814	0.05480	0.05888	0.05714
0.05806	0.05746	0.05838	0.05419	0.05846	0.05716
0.05876	0.05773	0.05848	0.05466	0.05914	0.05751
0.05879	0.05740	0.05848	0.05437	0.05895	0.05734
0.05878	0.05733	0.05869	0.05436	0.05933	0.05754
0.05919	0.05736	0.05863	0.05475	0.05884	0.05753
0.05923	0.05791	0.05845	0.05472	0.05914	0.05811
0.05931	0.05780	0.05882	0.05477	0.05940	0.05771
0.05898	0.05848	0.05889	0.05482	0.05925	0.05794
0.05950	0.05782	0.05855	0.05483	0.05954	0.05794
0.05893	0.05805	0.05923	0.05540	0.05960	0.05795
0.05947	0.05775	0.05916	0.05490	0.05927	0.05786
0.05973	0.05865	0.05908	0.05577	0.05959	0.05809
0.05939	0.05823	0.05914	0.05540	0.05905	0.05829
0.05937	0.05857	0.05942	0.05559	0.05891	0.05808
0.05959	0.05825	0.05954	0.05537	0.05662	0.05824
0.05956	0.05874	0.05962	0.05547	0.05610	0.05893
0.06003	0.05854	0.05953	0.05568	0.05550	0.05858
0.05994	0.05878	0.05948	0.05553	0.05598	0.05854
0.06018	0.05840	0.05960	0.05549	0.05629	0.05840
0.06006	0.05907	0.05978	0.05574	0.05514	0.05848
0.05993	0.05871	0.05962	0.05584	0.05588	0.05862
0.06028	0.05941	0.05996	0.05608	0.05611	0.05890
0.06025	0.05873	0.05997	0.05552	0.05603	0.05883
0.05969	0.05925	0.05996	0.05611	0.05590	0.05900
0.06028	0.05900	0.06001	0.05567	0.05664	0.05878
0.06040	0.05897	0.06029	0.05626	0.05632	0.05880
0.06083	0.05963	0.05982	0.05604	0.05661	0.05895
0.06097	0.05990	0.06033	0.05618	0.05632	0.05882
0.06087	0.05957	0.06029	0.05606	0.05597	0.05917
0.06049	0.05978	0.06049	0.05683	0.05650	0.05894
0.06073	0.05976	0.06061	0.05638	0.05691	0.05943
0.06064	0.05982	0.06065	0.05674	0.05686	0.05970
0.06097	0.05976	0.06021	0.05655	0.05708	0.05947
0.06124	0.05971	0.06056	0.05671	0.05666	0.05932
0.06128	0.05994	0.06068	0.05689	0.05693	0.06010
0.06109	0.06028	0.06127	0.05665	0.05684	0.05984
0.06163	0.05988	0.06090	0.05698	0.05709	0.06049
0.06103	0.06047	0.06117	0.05649	0.05702	0.05965
0.06116	0.05987	0.06121	0.05739	0.05719	0.06022
0.06167	0.06069	0.06123	0.05733	0.05684	0.05993
0.06163	0.06018	0.06114	0.05678	0.05710	0.06046
0.06179	0.06051	0.06126	0.05706	0.05693	0.06005
0.06199	0.06082	0.06101	0.05724	0.05815	0.06051
0.06169	0.06066	0.06172	0.05702	0.05792	0.06014
0.06191	0.06075	0.06155	0.05732	0.05831	0.06037
0.06164	0.06107	0.06166	0.05712	0.05740	0.06062
0.06178	0.06043	0.06166	0.05775	0.05827	0.06064
0.06218	0.06085	0.06160	0.05763	0.05830	0.06082
0.06244	0.06112	0.06164	0.05791	0.05777	0.06080

0.06225	0.06135	0.06193	0.05721	0.05755	0.06062
0.06247	0.06104	0.06186	0.05773	0.05862	0.06072
0.06248	0.06143	0.06246	0.05749	0.05838	0.06112
0.06255	0.06122	0.06187	0.05787	0.05906	0.06076
0.06268	0.06105	0.06252	0.05831	0.05864	0.06100
0.06303	0.06181	0.06211	0.05800	0.05922	0.06114
0.06244	0.06147	0.06254	0.05781	0.05887	0.06117
0.06292	0.06180	0.06240	0.05842	0.05907	0.06181
0.06289	0.06156	0.06270	0.05849	0.05894	0.06111
0.06339	0.06199	0.06252	0.05834	0.05893	0.06160
0.06273	0.06182	0.06286	0.05864	0.05883	0.06119
0.06308	0.06175	0.06250	0.05868	0.05960	0.06180
0.06338	0.06200	0.06306	0.05839	0.05966	0.06171
0.06342	0.06193	0.06297	0.05853	0.05912	0.06196
0.06345	0.06242	0.06313	0.05820	0.05741	0.06182
0.06358	0.06235	0.06322	0.05885	0.05872	0.06177
0.06358	0.06241	0.06353	0.05871	0.05970	0.06171
0.06301	0.06292	0.06312	0.05939	0.05973	0.06191
0.06331	0.06228	0.06344	0.05858	0.06048	0.06192
0.06389	0.06240	0.06344	0.05975	0.05989	0.06221
0.06375	0.06248	0.06343	0.05857	0.05994	0.06256
0.06375	0.06262	0.06307	0.05946	0.05981	0.06225
0.06417	0.06272	0.06353	0.05946	0.05979	0.06269
0.06416	0.06279	0.06363	0.05902	0.05988	0.06233
0.06418	0.06252	0.06356	0.05908	0.06023	0.06259
0.06407	0.06315	0.06354	0.05909	0.06003	0.06273
0.06456	0.06238	0.06351	0.05913	0.06056	0.06244
0.06490	0.06309	0.06393	0.05863	0.06060	0.06299
0.06456	0.06278	0.06331	0.05935	0.06041	0.06304
0.06445	0.06302	0.06418	0.05928	0.06011	0.06284
0.06449	0.06299	0.06428	0.05974	0.06045	0.06321
0.06428	0.06330	0.06426	0.05927	0.06054	0.06329
0.06482	0.06331	0.06430	0.06038	0.06100	0.06310
0.06495	0.06364	0.06428	0.05983	0.06023	0.06302
0.06510	0.06332	0.06444	0.06014	0.06060	0.06310
0.06483	0.06368	0.06448	0.06028	0.06059	0.06325
0.06506	0.06371	0.06447	0.06033	0.06120	0.06319
0.06497	0.06411	0.06522	0.06037	0.06075	0.06353
0.06564	0.06399	0.06492	0.06041	0.06119	0.06336
0.06538	0.06426	0.06509	0.05992	0.06165	0.06328
0.06530	0.06404	0.06499	0.06037	0.06186	0.06375
0.06490	0.06428	0.06515	0.06018	0.06109	0.06391
0.06564	0.06375	0.06480	0.06106	0.06174	0.06370
0.06549	0.06449	0.06537	0.06075	0.06116	0.06412
0.06533	0.06443	0.06521	0.06047	0.06066	0.06375
0.06493	0.06472	0.06533	0.06045	0.06069	0.06407
0.06574	0.06459	0.06532	0.06058	0.06188	0.06413
0.06574	0.06438	0.06535	0.06109	0.06193	0.06422
0.06610	0.06447	0.06518	0.06128	0.06246	0.06471
0.06612	0.06499	0.06565	0.06150	0.06187	0.06436
0.06626	0.06453	0.06523	0.06162	0.06170	0.06447
0.06618	0.06489	0.06576	0.06149	0.06132	0.06445
0.06632	0.06471	0.06551	0.06157	0.06263	0.06475
0.06659	0.06526	0.06578	0.06141	0.06225	0.06456
0.06670	0.06515	0.06591	0.06185	0.06303	0.06476
0.06650	0.06523	0.06606	0.06129	0.06277	0.06475
0.06666	0.06522	0.06575	0.06170	0.06332	0.06466

0.06673	0.06544	0.06647	0.06193	0.06264	0.06483
0.06685	0.06520	0.06600	0.06215	0.06202	0.06479
0.06620	0.06544	0.06656	0.06167	0.06319	0.06489
0.06659	0.06544	0.06638	0.06218	0.06317	0.06514
0.06660	0.06553	0.06657	0.06222	0.06313	0.06539
0.06730	0.06564	0.06624	0.06223	0.06329	0.06548
0.06685	0.06598	0.06677	0.06222	0.06348	0.06512
0.06785	0.06564	0.06641	0.06272	0.06368	0.06572
0.06724	0.06592	0.06698	0.06204	0.06261	0.06538
0.06751	0.06587	0.06701	0.06284	0.06259	0.06570
0.06764	0.06631	0.06707	0.06213	0.06337	0.06559
0.06802	0.06606	0.06667	0.06285	0.06381	0.06570
0.06721	0.06596	0.06691	0.06248	0.06377	0.06549
0.06798	0.06650	0.06701	0.06234	0.06432	0.06598
0.06789	0.06646	0.06725	0.06219	0.06388	0.06593
0.06863	0.06660	0.06731	0.06286	0.06344	0.06618
0.06790	0.06646	0.06759	0.06233	0.06364	0.06604
0.06803	0.06594	0.06749	0.06257	0.06389	0.06610
0.06761	0.06643	0.06755	0.06308	0.06475	0.06654
0.06826	0.06652	0.06729	0.06273	0.06505	0.06599
0.06818	0.06702	0.06771	0.06305	0.06451	0.06672
0.06854	0.06629	0.06753	0.06320	0.06485	0.06642
0.06843	0.06692	0.06797	0.06278	0.06444	0.06650
0.06865	0.06666	0.06783	0.06311	0.06429	0.06655
0.06872	0.06720	0.06813	0.06352	0.06422	0.06680
0.06893	0.06711	0.06789	0.06326	0.06506	0.06667
0.06832	0.06729	0.06789	0.06374	0.06538	0.06734
0.06859	0.06703	0.06777	0.06327	0.06489	0.06683
0.06878	0.06720	0.06825	0.06330	0.06557	0.06700
0.06862	0.06737	0.06806	0.06389	0.06541	0.06673
0.06911	0.06740	0.06834	0.06340	0.06582	0.06733
0.06862	0.06737	0.06863	0.06387	0.06560	0.06703
0.06851	0.06766	0.06841	0.06420	0.06530	0.06705
0.06868	0.06774	0.06838	0.06410	0.06571	0.06723
0.06921	0.06768	0.06849	0.06440	0.06567	0.06759
0.06938	0.06789	0.06861	0.06441	0.06609	0.06740
0.06927	0.06777	0.06853	0.06444	0.06604	0.06767
0.06942	0.06747	0.06882	0.06397	0.06598	0.06719
0.06948	0.06803	0.06881	0.06449	0.06570	0.06776
0.06971	0.06825	0.06875	0.06429	0.06544	0.06749
0.06980	0.06842	0.06895	0.06516	0.06599	0.06817
0.06950	0.06819	0.06907	0.06489	0.06652	0.06755
0.06995	0.06814	0.06925	0.06496	0.06624	0.06801
0.07004	0.06820	0.06900	0.06439	0.06660	0.06807
0.06961	0.06828	0.06921	0.06521	0.06678	0.06789
0.07042	0.06834	0.06919	0.06521	0.06682	0.06805
0.06999	0.06872	0.06990	0.06515	0.06657	0.06827
0.07017	0.06838	0.06940	0.06525	0.06649	0.06833
0.07041	0.06870	0.07007	0.06538	0.06728	0.06828
0.06948	0.06867	0.06952	0.06527	0.06713	0.06836
0.07042	0.06849	0.06978	0.06557	0.06680	0.06836
0.07053	0.06870	0.06967	0.06551	0.06676	0.06825
0.07043	0.06889	0.06989	0.06539	0.06688	0.06878
0.07044	0.06878	0.06979	0.06538	0.06688	0.06851
0.07048	0.06900	0.07012	0.06558	0.06682	0.06890
0.07068	0.06925	0.06992	0.06591	0.06716	0.06908
0.07109	0.06935	0.07026	0.06546	0.06699	0.06900

0.07090	0.06904	0.07010	0.06537	0.06748	0.06872
0.07116	0.06907	0.07074	0.06619	0.06733	0.06917
0.07118	0.06934	0.07030	0.06584	0.06794	0.06915
0.07129	0.06982	0.07055	0.06600	0.06723	0.06948
0.07142	0.06972	0.07020	0.06511	0.06641	0.06918
0.07083	0.06976	0.07075	0.06585	0.06667	0.06943
0.07101	0.06962	0.07053	0.06580	0.06782	0.06945
0.07129	0.06996	0.07079	0.06579	0.06767	0.06952
0.07203	0.07030	0.07053	0.06523	0.06754	0.07015
0.07159	0.06983	0.07152	0.06592	0.06755	0.06926
0.07164	0.07031	0.07063	0.06631	0.06815	0.07000
0.07164	0.07005	0.07097	0.06645	0.06698	0.06963
0.07222	0.07048	0.07090	0.06653	0.06759	0.06981
0.07167	0.07010	0.07150	0.06700	0.06845	0.07007
0.07210	0.07061	0.07124	0.06662	0.06938	0.06991
0.07191	0.07017	0.07130	0.06707	0.06873	0.07006
0.07223	0.07015	0.07147	0.06632	0.06918	0.07001
0.07224	0.07068	0.07161	0.06719	0.06916	0.06974
0.07240	0.07085	0.07132	0.06732	0.06920	0.07042
0.07203	0.07105	0.07196	0.06751	0.06859	0.07010
0.07284	0.07066	0.07150	0.06726	0.06872	0.07070
0.07187	0.07113	0.07165	0.06758	0.06957	0.07012
0.07240	0.07118	0.07165	0.06659	0.06978	0.07095
0.07285	0.07131	0.07209	0.06680	0.06946	0.07044
0.07279	0.07086	0.07161	0.06753	0.06982	0.07086
0.07286	0.07112	0.07188	0.06765	0.06931	0.07063
0.07295	0.07145	0.07177	0.06763	0.06938	0.07115
0.07236	0.07101	0.07235	0.06770	0.06860	0.07071
0.07350	0.07169	0.07221	0.06796	0.06880	0.07126
0.07299	0.07152	0.07253	0.06724	0.06957	0.07105
0.07338	0.07139	0.07215	0.06719	0.06984	0.07101
0.07339	0.07126	0.07243	0.06866	0.06967	0.07087
0.07338	0.07160	0.07254	0.06892	0.06994	0.07145
0.07335	0.07183	0.07248	0.06899	0.06959	0.07163
0.07353	0.07187	0.07269	0.06932	0.07012	0.07145
0.07346	0.07154	0.07279	0.06910	0.06972	0.07146
0.07354	0.07201	0.07238	0.06899	0.07034	0.07142
0.07360	0.07145	0.07275	0.06914	0.07054	0.07149
0.07375	0.07236	0.07291	0.06955	0.06985	0.07164
0.07342	0.07219	0.07283	0.06903	0.06995	0.07192
0.07416	0.07235	0.07289	0.06945	0.07041	0.07192
0.07392	0.07218	0.07344	0.06895	0.07003	0.07203
0.07415	0.07225	0.07309	0.06896	0.07039	0.07202
0.07378	0.07246	0.07335	0.06912	0.07070	0.07199
0.07374	0.07274	0.07311	0.06999	0.07099	0.07192
0.07427	0.07237	0.07334	0.06978	0.07110	0.07192
0.07439	0.07241	0.07388	0.07003	0.07072	0.07205
0.07393	0.07242	0.07377	0.06954	0.07144	0.07219
0.07463	0.07299	0.07395	0.06995	0.07108	0.07278
0.07475	0.07306	0.07402	0.06986	0.07096	0.07221
0.07489	0.07284	0.07412	0.06965	0.07067	0.07265
0.07439	0.07299	0.07360	0.06903	0.07147	0.07254
0.07493	0.07303	0.07388	0.07025	0.07138	0.07255
0.07522	0.07346	0.07430	0.07076	0.07161	0.07310
0.07468	0.07303	0.07430	0.07051	0.07143	0.07284
0.07479	0.07275	0.07381	0.07049	0.07135	0.07298
0.07525	0.07361	0.07444	0.07078	0.07099	0.07294

0.07493	0.07356	0.07439	0.07070	0.07118	0.07319
0.07514	0.07361	0.07467	0.07074	0.07205	0.07334
0.07520	0.07329	0.07428	0.07050	0.07184	0.07328
0.07565	0.07355	0.07443	0.07108	0.07238	0.07328
0.07549	0.07355	0.07452	0.07121	0.07252	0.07344
0.07538	0.07410	0.07502	0.07130	0.07193	0.07331
0.07589	0.07413	0.07466	0.07106	0.07095	0.07393
0.07560	0.07409	0.07509	0.07070	0.07168	0.07331
0.07565	0.07404	0.07452	0.07044	0.07223	0.07380
0.07497	0.07455	0.07503	0.07140	0.07222	0.07321
0.07545	0.07413	0.07477	0.07146	0.07297	0.07423
0.07625	0.07456	0.07552	0.07145	0.07249	0.07373
0.07602	0.07439	0.07530	0.07154	0.07248	0.07428
0.07604	0.07434	0.07518	0.07116	0.07197	0.07389
0.07611	0.07431	0.07532	0.07081	0.07263	0.07446
0.07623	0.07452	0.07544	0.07081	0.07215	0.07416
0.07614	0.07483	0.07555	0.07178	0.07223	0.07410
0.07628	0.07469	0.07571	0.07172	0.07283	0.07404
0.07673	0.07463	0.07568	0.07181	0.07362	0.07464
0.07632	0.07467	0.07608	0.07202	0.07352	0.07458
0.07628	0.07516	0.07564	0.07232	0.07365	0.07420
0.07705	0.07542	0.07562	0.07193	0.07360	0.07461
0.07683	0.07546	0.07610	0.07176	0.07401	0.07456
0.07669	0.07505	0.07611	0.07241	0.07381	0.07492
0.07645	0.07495	0.07598	0.07207	0.07356	0.07424
0.07701	0.07464	0.07645	0.07269	0.07360	0.07503
0.07739	0.07514	0.07631	0.07239	0.07421	0.07489
0.07721	0.07588	0.07665	0.07178	0.07335	0.07507
0.07723	0.07587	0.07656	0.07254	0.07374	0.07492
0.07733	0.07571	0.07632	0.07241	0.07370	0.07493
0.07719	0.07569	0.07646	0.07292	0.07368	0.07522
0.07773	0.07597	0.07647	0.07249	0.07252	0.07523
0.07729	0.07607	0.07647	0.07300	0.07367	0.07532
0.07697	0.07604	0.07706	0.07273	0.07431	0.07534
0.07763	0.07577	0.07680	0.07332	0.07489	0.07556
0.07803	0.07599	0.07716	0.07231	0.07467	0.07542
0.07805	0.07621	0.07714	0.07317	0.07511	0.07582
0.07786	0.07616	0.07740	0.07317	0.07437	0.07605
0.07843	0.07620	0.07683	0.07335	0.07488	0.07541
0.07757	0.07642	0.07731	0.07305	0.07484	0.07606
0.07815	0.07629	0.07687	0.07330	0.07463	0.07557
0.07859	0.07686	0.07736	0.07359	0.07412	0.07625
0.07815	0.07691	0.07754	0.07342	0.07531	0.07613
0.07821	0.07651	0.07753	0.07345	0.07500	0.07584
0.07858	0.07670	0.07756	0.07399	0.07589	0.07645
0.07766	0.07650	0.07761	0.07367	0.07491	0.07630
0.07832	0.07721	0.07765	0.07392	0.07543	0.07672
0.07822	0.07695	0.07810	0.07373	0.07481	0.07634
0.07845	0.07690	0.07767	0.07373	0.07551	0.07668
0.07876	0.07641	0.07820	0.07270	0.07585	0.07647
0.07894	0.07726	0.07807	0.07348	0.07583	0.07642
0.07881	0.07738	0.07816	0.07394	0.07602	0.07723
0.07863	0.07750	0.07810	0.07370	0.07584	0.07665
0.07928	0.07729	0.07799	0.07364	0.07524	0.07717
0.07967	0.07741	0.07847	0.07470	0.07637	0.07658
0.07874	0.07744	0.07837	0.07447	0.07616	0.07729
0.07908	0.07713	0.07865	0.07460	0.07641	0.07693

0.07907	0.07718	0.07861	0.07458	0.07637	0.07730
0.07981	0.07760	0.07867	0.07427	0.07657	0.07695
0.07959	0.07764	0.07870	0.07449	0.07672	0.07763
0.07963	0.07747	0.07859	0.07453	0.07598	0.07726
0.07963	0.07815	0.07864	0.07532	0.07687	0.07808
0.07991	0.07797	0.07907	0.07494	0.07642	0.07725
0.07991	0.07773	0.07883	0.07511	0.07572	0.07828
0.07974	0.07763	0.07906	0.07485	0.07628	0.07759
0.08040	0.07790	0.07910	0.07514	0.07690	0.07770
0.08058	0.07883	0.07935	0.07559	0.07734	0.07780
0.08013	0.07840	0.07960	0.07528	0.07690	0.07789
0.08041	0.07826	0.07944	0.07527	0.07717	0.07770
0.08016	0.07828	0.07957	0.07554	0.07769	0.07812
0.08011	0.07863	0.07962	0.07582	0.07719	0.07782
0.08041	0.07879	0.07960	0.07584	0.07805	0.07861
0.08048	0.07864	0.07997	0.07535	0.07722	0.07796
0.08038	0.07840	0.07980	0.07583	0.07701	0.07835
0.08103	0.07917	0.07993	0.07565	0.07759	0.07851
0.08052	0.07887	0.07999	0.07580	0.07760	0.07833
0.08094	0.07939	0.07988	0.07570	0.07792	0.07871
0.08092	0.07904	0.08001	0.07569	0.07716	0.07852
0.08108	0.07921	0.08022	0.07556	0.07655	0.07877
0.08116	0.07906	0.08005	0.07638	0.07821	0.07830
0.08106	0.07913	0.08018	0.07617	0.07808	0.07913
0.08127	0.07923	0.08021	0.07661	0.07806	0.07883
0.08138	0.07953	0.08051	0.07587	0.07812	0.07899
0.08132	0.07926	0.07998	0.07620	0.07834	0.07913
0.08167	0.07979	0.08066	0.07649	0.07784	0.07906
0.08097	0.07955	0.08049	0.07629	0.07865	0.07939
0.08176	0.08004	0.08070	0.07656	0.07859	0.07942
0.08160	0.07977	0.08072	0.07666	0.07875	0.07953
0.08186	0.07985	0.08085	0.07634	0.07897	0.07932
0.08174	0.07972	0.08096	0.07663	0.07879	0.07982
0.08197	0.08028	0.08109	0.07638	0.07785	0.07957
0.08214	0.08013	0.08077	0.07661	0.07833	0.07930
0.08236	0.08002	0.08143	0.07627	0.07863	0.08003
0.08215	0.07990	0.08115	0.07678	0.07888	0.07946
0.08238	0.08018	0.08126	0.07651	0.07873	0.08016
0.08205	0.08017	0.08124	0.07690	0.07962	0.08006
0.08249	0.08069	0.08180	0.07720	0.07942	0.08015
0.08205	0.08055	0.08133	0.07704	0.07884	0.07997
0.08187	0.08058	0.08159	0.07735	0.07940	0.08064
0.08214	0.08065	0.08175	0.07726	0.07972	0.07990
0.08173	0.08053	0.08179	0.07745	0.07916	0.08061
0.08197	0.08080	0.08206	0.07747	0.07944	0.08038
0.08251	0.08095	0.08230	0.07785	0.07947	0.08064
0.08293	0.08097	0.08183	0.07780	0.08003	0.08014
0.08261	0.08121	0.08186	0.07780	0.07933	0.08090
0.08261	0.08107	0.08166	0.07803	0.07962	0.08063
0.08321	0.08134	0.08206	0.07785	0.08000	0.08085
0.08266	0.08148	0.08220	0.07718	0.08008	0.08045
0.08322	0.08115	0.08248	0.07812	0.07922	0.08091
0.08333	0.08158	0.08249	0.07822	0.07911	0.08064
0.08330	0.08130	0.08253	0.07839	0.08011	0.08087
0.08350	0.08204	0.08223	0.07855	0.08013	0.08151
0.08394	0.08181	0.08261	0.07828	0.08024	0.08108
0.08378	0.08183	0.08266	0.07820	0.07962	0.08122

0.08344	0.08186	0.08281	0.07848	0.07977	0.08130
0.08298	0.08172	0.08268	0.07857	0.08001	0.08113
0.08375	0.08200	0.08327	0.07889	0.08069	0.08172
0.08397	0.08180	0.08336	0.07879	0.08118	0.08148
0.08385	0.08186	0.08285	0.07890	0.08173	0.08153
0.08425	0.08225	0.08278	0.07881	0.08062	0.08171
0.08403	0.08233	0.08308	0.07857	0.08055	0.08190
0.08420	0.08244	0.08314	0.07809	0.08067	0.08205
0.08401	0.08248	0.08370	0.07870	0.08057	0.08197
0.08429	0.08235	0.08358	0.07880	0.08011	0.08205
0.08421	0.08259	0.08333	0.07924	0.08047	0.08176
0.08452	0.08270	0.08323	0.07925	0.08074	0.08240
0.08453	0.08277	0.08340	0.07946	0.08105	0.08178
0.08447	0.08294	0.08417	0.07920	0.08148	0.08242
0.08508	0.08265	0.08389	0.07953	0.08230	0.08221
0.08461	0.08334	0.08395	0.07885	0.08155	0.08211
0.08420	0.08266	0.08410	0.07937	0.08203	0.08208
0.08439	0.08287	0.08418	0.07951	0.08148	0.08297
0.08522	0.08250	0.08404	0.07934	0.08146	0.08236
0.08512	0.08310	0.08413	0.07863	0.08080	0.08292
0.08506	0.08313	0.08400	0.07931	0.08191	0.08257
0.08537	0.08337	0.08421	0.07970	0.08200	0.08296
0.08535	0.08341	0.08382	0.08032	0.08255	0.08300
0.08508	0.08362	0.08445	0.07965	0.08254	0.08304
0.08541	0.08355	0.08445	0.08018	0.08291	0.08263
0.08596	0.08364	0.08496	0.08014	0.08179	0.08336
0.08549	0.08343	0.08425	0.08024	0.08189	0.08312
0.08572	0.08362	0.08471	0.08041	0.08234	0.08344
0.08580	0.08366	0.08461	0.08021	0.08331	0.08354
0.08550	0.08399	0.08492	0.08037	0.08273	0.08344
0.08539	0.08397	0.08508	0.08032	0.08297	0.08354
0.08587	0.08410	0.08502	0.08059	0.08298	0.08420
0.08570	0.08438	0.08485	0.08108	0.08364	0.08353
0.08605	0.08387	0.08520	0.08094	0.08344	0.08393
0.08619	0.08409	0.08539	0.08001	0.08343	0.08384
0.08580	0.08445	0.08567	0.08071	0.08359	0.08400
0.08583	0.08426	0.08472	0.08097	0.08369	0.08393
0.08648	0.08493	0.08561	0.08174	0.08359	0.08378
0.08601	0.08422	0.08536	0.08123	0.08383	0.08367
0.08660	0.08469	0.08570	0.08118	0.08368	0.08455
0.08680	0.08416	0.08565	0.08099	0.08377	0.08412
0.08638	0.08447	0.08548	0.08136	0.08303	0.08433
0.08703	0.08502	0.08571	0.08140	0.08391	0.08448
0.08659	0.08490	0.08610	0.08139	0.08371	0.08445
0.08708	0.08481	0.08580	0.08178	0.08362	0.08446
0.08686	0.08516	0.08624	0.08189	0.08340	0.08468
0.08668	0.08492	0.08612	0.08149	0.08364	0.08493
0.08737	0.08537	0.08613	0.08214	0.08367	0.08494
0.08690	0.08467	0.08631	0.08159	0.08418	0.08530
0.08755	0.08538	0.08647	0.08188	0.08433	0.08483
0.08718	0.08520	0.08608	0.08215	0.08426	0.08532
0.08771	0.08528	0.08673	0.08235	0.08488	0.08511
0.08718	0.08578	0.08638	0.08231	0.08511	0.08538
0.08780	0.08550	0.08692	0.08241	0.08508	0.08530
0.08720	0.08536	0.08665	0.08185	0.08454	0.08540
0.08708	0.08579	0.08689	0.08125	0.08434	0.08548
0.08776	0.08566	0.08664	0.08170	0.08454	0.08524

0.08812	0.08613	0.08700	0.08271	0.08497	0.08520
0.08790	0.08614	0.08735	0.08249	0.08550	0.08551
0.08799	0.08607	0.08720	0.08284	0.08558	0.08566
0.08835	0.08617	0.08655	0.08268	0.08532	0.08543
0.08828	0.08624	0.08711	0.08263	0.08545	0.08563
0.08856	0.08626	0.08717	0.08296	0.08568	0.08619
0.08803	0.08637	0.08749	0.08318	0.08580	0.08551
0.08827	0.08653	0.08700	0.08205	0.08567	0.08596
0.08818	0.08608	0.08744	0.08287	0.08583	0.08613
0.08866	0.08687	0.08766	0.08311	0.08614	0.08596
0.08926	0.08677	0.08760	0.08316	0.08591	0.08621
0.08862	0.08663	0.08778	0.08312	0.08546	0.08606
0.08872	0.08690	0.08781	0.08355	0.08621	0.08588
0.08885	0.08678	0.08777	0.08292	0.08602	0.08626
0.08864	0.08715	0.08775	0.08354	0.08624	0.08618
0.08900	0.08708	0.08796	0.08298	0.08555	0.08666
0.08893	0.08724	0.08764	0.08326	0.08608	0.08665
0.08916	0.08712	0.08745	0.08394	0.08598	0.08683
0.08931	0.08732	0.08845	0.08399	0.08652	0.08668
0.08929	0.08755	0.08844	0.08348	0.08650	0.08697
0.08954	0.08742	0.08848	0.08354	0.08645	0.08741
0.08940	0.08763	0.08877	0.08360	0.08677	0.08732
0.08943	0.08760	0.08842	0.08374	0.08688	0.08689
0.08949	0.08737	0.08794	0.08362	0.08657	0.08705
0.08956	0.08734	0.08860	0.08386	0.08719	0.08726
0.09005	0.08820	0.08848	0.08463	0.08678	0.08729
0.08937	0.08746	0.08899	0.08339	0.08716	0.08750
0.08948	0.08755	0.08890	0.08417	0.08651	0.08725
0.08962	0.08793	0.08907	0.08395	0.08730	0.08738
0.09007	0.08798	0.08940	0.08390	0.08691	0.08733
0.09019	0.08829	0.08919	0.08452	0.08767	0.08766
0.09011	0.08801	0.08882	0.08472	0.08761	0.08767
0.09005	0.08817	0.08859	0.08439	0.08707	0.08804
0.09076	0.08832	0.08937	0.08472	0.08771	0.08820
0.09025	0.08854	0.08924	0.08484	0.08783	0.08793
0.09022	0.08838	0.08973	0.08442	0.08740	0.08805
0.08984	0.08875	0.08964	0.08456	0.08785	0.08788
0.09022	0.08836	0.08939	0.08515	0.08798	0.08821
0.08937	0.08860	0.08937	0.08465	0.08833	0.08802
0.09020	0.08849	0.08914	0.08477	0.08757	0.08848
0.09097	0.08910	0.08934	0.08526	0.08803	0.08840
0.09081	0.08897	0.09019	0.08541	0.08859	0.08807
0.09057	0.08899	0.09004	0.08551	0.08817	0.08825
0.09132	0.08920	0.08970	0.08578	0.08848	0.08863
0.09115	0.08922	0.08965	0.08546	0.08845	0.08849
0.09121	0.08908	0.09038	0.08556	0.08838	0.08860
0.09101	0.08906	0.09029	0.08557	0.08830	0.08883
0.09153	0.08923	0.09032	0.08618	0.08874	0.08872
0.09168	0.08952	0.09025	0.08551	0.08850	0.08906
0.09145	0.08963	0.09087	0.08521	0.08873	0.08899
0.09145	0.08980	0.09043	0.08531	0.08933	0.08923
0.09183	0.08946	0.09088	0.08568	0.08867	0.08925
0.09168	0.08937	0.09037	0.08528	0.08872	0.08897
0.09120	0.09008	0.09127	0.08551	0.08936	0.08930
0.09148	0.08891	0.09058	0.08550	0.08916	0.08927
0.09161	0.09015	0.09028	0.08621	0.08876	0.08961
0.09210	0.08968	0.09067	0.08571	0.08959	0.08950

0.09217	0.08966	0.09110	0.08564	0.08970	0.08941
0.09216	0.08989	0.09071	0.08663	0.08915	0.08947
0.09170	0.08989	0.09144	0.08674	0.08924	0.08972
0.09223	0.09047	0.09142	0.08662	0.08985	0.08978
0.09240	0.09067	0.09172	0.08664	0.09003	0.09016
0.09237	0.09026	0.09108	0.08655	0.08996	0.09042
0.09270	0.09096	0.09159	0.08694	0.08963	0.08992
0.09268	0.09033	0.09162	0.08676	0.08913	0.09038
0.09268	0.09103	0.09185	0.08733	0.09006	0.09009
0.09225	0.09076	0.09182	0.08725	0.09020	0.09051
0.09254	0.09050	0.09201	0.08723	0.08907	0.08982
0.09288	0.09080	0.09147	0.08699	0.08785	0.09058
0.09306	0.09152	0.09189	0.08702	0.08981	0.09053
0.09319	0.09127	0.09159	0.08722	0.08983	0.09063
0.09306	0.09098	0.09216	0.08768	0.09050	0.09051
0.09271	0.09094	0.09208	0.08763	0.09056	0.09064
0.09286	0.09116	0.09239	0.08762	0.09088	0.09046
0.09328	0.09125	0.09195	0.08756	0.09034	0.09106
0.09308	0.09124	0.09263	0.08801	0.09017	0.09075
0.09320	0.09131	0.09229	0.08720	0.09062	0.09116
0.09351	0.09135	0.09266	0.08770	0.09103	0.09062
0.09370	0.09139	0.09212	0.08781	0.09033	0.09127
0.09347	0.09153	0.09227	0.08762	0.09001	0.09093
0.09415	0.09177	0.09261	0.08708	0.09059	0.09173
0.09354	0.09174	0.09274	0.08762	0.09139	0.09127
0.09325	0.09158	0.09243	0.08802	0.09128	0.09144
0.09416	0.09157	0.09313	0.08763	0.09073	0.09140
0.09412	0.09222	0.09284	0.08782	0.08914	0.09163
0.09417	0.09170	0.09312	0.08820	0.09169	0.09210
0.09413	0.09210	0.09326	0.08819	0.09149	0.09163
0.09441	0.09228	0.09334	0.08824	0.09134	0.09187
0.09443	0.09230	0.09310	0.08875	0.09184	0.09170
0.09416	0.09200	0.09348	0.08859	0.09202	0.09186
0.09441	0.09254	0.09307	0.08866	0.09184	0.09223
0.09425	0.09217	0.09384	0.08899	0.09194	0.09227
0.09457	0.09252	0.09317	0.08892	0.09156	0.09219
0.09473	0.09252	0.09365	0.08910	0.09259	0.09237
0.09488	0.09278	0.09375	0.08810	0.09157	0.09247
0.09504	0.09285	0.09390	0.08865	0.09044	0.09276
0.09520	0.09311	0.09399	0.08942	0.09168	0.09237
0.09503	0.09247	0.09383	0.08932	0.09258	0.09265
0.09493	0.09317	0.09397	0.08957	0.09201	0.09309
0.09511	0.09346	0.09392	0.08938	0.09293	0.09239
0.09533	0.09290	0.09410	0.08947	0.09282	0.09287
0.09493	0.09302	0.09445	0.08897	0.09240	0.09274
0.09480	0.09325	0.09441	0.08954	0.09227	0.09320
0.09533	0.09317	0.09457	0.08970	0.09282	0.09311
0.09559	0.09336	0.09419	0.08959	0.09318	0.09334
0.09550	0.09353	0.09465	0.08951	0.09312	0.09293
0.09541	0.09322	0.09483	0.08985	0.09325	0.09353
0.09604	0.09355	0.09405	0.08969	0.09371	0.09299
0.09568	0.09350	0.09491	0.09005	0.09352	0.09380
0.09545	0.09383	0.09480	0.08982	0.09326	0.09361
0.09606	0.09426	0.09482	0.09031	0.09353	0.09368
0.09570	0.09375	0.09506	0.09013	0.09272	0.09378
0.09634	0.09379	0.09507	0.09028	0.09273	0.09369
0.09583	0.09360	0.09527	0.08969	0.09273	0.09378

0.09631	0.09431	0.09483	0.09031	0.09212	0.09370
0.09666	0.09410	0.09473	0.09026	0.09245	0.09426
0.09653	0.09440	0.09555	0.09054	0.09327	0.09361
0.09650	0.09431	0.09538	0.09021	0.09389	0.09367
0.09651	0.09427	0.09585	0.09062	0.09437	0.09410
0.09633	0.09478	0.09559	0.09049	0.09409	0.09425
0.09688	0.09460	0.09549	0.09071	0.09470	0.09436
0.09671	0.09453	0.09571	0.09073	0.09360	0.09411
0.09652	0.09454	0.09576	0.09064	0.09353	0.09441
0.09682	0.09444	0.09542	0.09103	0.09468	0.09424
0.09746	0.09487	0.09607	0.09062	0.09458	0.09443
0.09735	0.09508	0.09571	0.09112	0.09407	0.09464
0.09748	0.09513	0.09648	0.09155	0.09445	0.09424
0.09734	0.09519	0.09621	0.09112	0.09469	0.09510
0.09758	0.09520	0.09623	0.09108	0.09534	0.09486
0.09756	0.09516	0.09623	0.09102	0.09469	0.09488
0.09749	0.09559	0.09632	0.09073	0.09485	0.09526
0.09720	0.09478	0.09631	0.09132	0.09527	0.09464
0.09772	0.09562	0.09690	0.09163	0.09570	0.09486
0.09754	0.09528	0.09631	0.09159	0.09518	0.09522
0.09785	0.09584	0.09643	0.09156	0.09562	0.09486
0.09777	0.09608	0.09616	0.09203	0.09567	0.09520
0.09771	0.09499	0.09688	0.09190	0.09591	0.09569
0.09780	0.09575	0.09633	0.09170	0.09545	0.09502
0.09854	0.09588	0.09655	0.09158	0.09567	0.09548
0.09819	0.09596	0.09637	0.09215	0.09435	0.09567
0.09853	0.09626	0.09668	0.09255	0.09552	0.09596
0.09800	0.09592	0.09674	0.09244	0.09570	0.09587
0.09824	0.09626	0.09719	0.09224	0.09573	0.09572
0.09857	0.09618	0.09737	0.09224	0.09627	0.09585
0.09872	0.09621	0.09726	0.09237	0.09582	0.09575
0.09875	0.09673	0.09732	0.09234	0.09483	0.09599
0.09898	0.09649	0.09771	0.09197	0.09637	0.09603
0.09845	0.09627	0.09742	0.09280	0.09650	0.09602
0.09844	0.09638	0.09762	0.09207	0.09650	0.09610
0.09907	0.09632	0.09774	0.09272	0.09596	0.09665
0.09897	0.09666	0.09751	0.09289	0.09691	0.09614
0.09872	0.09706	0.09790	0.09284	0.09648	0.09639
0.09930	0.09682	0.09797	0.09206	0.09610	0.09633
0.09937	0.09711	0.09736	0.09266	0.09642	0.09654
0.09908	0.09688	0.09734	0.09303	0.09697	0.09671
0.09926	0.09749	0.09747	0.09314	0.09698	0.09666
0.09932	0.09678	0.09802	0.09333	0.09722	0.09704
0.09939	0.09730	0.09777	0.09359	0.09679	0.09626
0.09967	0.09692	0.09810	0.09326	0.09543	0.09707
0.09972	0.09714	0.09761	0.09383	0.09644	0.09693
0.09985	0.09752	0.09824	0.09304	0.09734	0.09749
0.09969	0.09781	0.09853	0.09262	0.09729	0.09729
0.10008	0.09764	0.09814	0.09307	0.09616	0.09730
0.09916	0.09781	0.09843	0.09384	0.09729	0.09708
0.09971	0.09776	0.09853	0.09435	0.09760	0.09743
0.09988	0.09810	0.09912	0.09410	0.09802	0.09692
0.09968	0.09764	0.09916	0.09361	0.09793	0.09775
0.09963	0.09779	0.09877	0.09426	0.09831	0.09727
0.10026	0.09781	0.09849	0.09409	0.09772	0.09777
0.10009	0.09794	0.09878	0.09366	0.09793	0.09766
0.10065	0.09832	0.09866	0.09442	0.09748	0.09791

0.10019	0.09844	0.09933	0.09423	0.09706	0.09770
0.10020	0.09831	0.09900	0.09483	0.09781	0.09793
0.10040	0.09849	0.09960	0.09442	0.09814	0.09814
0.10091	0.09833	0.09946	0.09457	0.09837	0.09794
0.10117	0.09896	0.09941	0.09427	0.09857	0.09845
0.10052	0.09859	0.09981	0.09436	0.09809	0.09835
0.10121	0.09867	0.09955	0.09464	0.09880	0.09818
0.10092	0.09834	0.09916	0.09479	0.09903	0.09830
0.10050	0.09900	0.10006	0.09499	0.09780	0.09829
0.10118	0.09885	0.09948	0.09519	0.09829	0.09877
0.10128	0.09914	0.09988	0.09491	0.09899	0.09842
0.10122	0.09870	0.09960	0.09502	0.09927	0.09878
0.10131	0.09918	0.10027	0.09524	0.09898	0.09854
0.10143	0.09896	0.09960	0.09524	0.09892	0.09940
0.10137	0.09917	0.10006	0.09582	0.09919	0.09879
0.10137	0.09931	0.09983	0.09555	0.09911	0.09902
0.10165	0.09932	0.10001	0.09511	0.09933	0.09928
0.10228	0.09954	0.10023	0.09553	0.09902	0.09915
0.10166	0.09963	0.09999	0.09599	0.09946	0.09919
0.10195	0.09970	0.09997	0.09400	0.09856	0.09955
0.10186	0.09975	0.10067	0.09561	0.09921	0.09910
0.10218	0.09941	0.10040	0.09604	0.09983	0.09953
0.10196	0.10018	0.10066	0.09618	0.09959	0.09943
0.10213	0.09946	0.10087	0.09618	0.09944	0.09964
0.10213	0.10010	0.10101	0.09643	0.09944	0.09963
0.10270	0.10008	0.10092	0.09634	0.09949	0.09952
0.10266	0.10002	0.10111	0.09644	0.09985	0.09964
0.10208	0.10020	0.10121	0.09627	0.09989	0.09982
0.10235	0.10021	0.10120	0.09674	0.10061	0.09988
0.10294	0.10034	0.10129	0.09708	0.10043	0.10009
0.10278	0.10032	0.10108	0.09684	0.10058	0.10019
0.10264	0.10002	0.10128	0.09670	0.10075	0.10041
0.10340	0.10030	0.10144	0.09663	0.10059	0.09996
0.10304	0.10066	0.10158	0.09685	0.10048	0.10018
0.10327	0.10112	0.10147	0.09704	0.09939	0.10046
0.10297	0.10085	0.10161	0.09728	0.10037	0.10009
0.10298	0.10101	0.10172	0.09728	0.10111	0.10090
0.10349	0.10101	0.10169	0.09717	0.10098	0.10031
0.10360	0.10063	0.10206	0.09760	0.10111	0.10054
0.10335	0.10114	0.10231	0.09723	0.10039	0.10092
0.10341	0.10103	0.10229	0.09734	0.10074	0.10068
0.10348	0.10086	0.10201	0.09764	0.10131	0.10100
0.10388	0.10169	0.10219	0.09734	0.10140	0.10098
0.10347	0.10121	0.10235	0.09778	0.10148	0.10070
0.10378	0.10148	0.10237	0.09761	0.10183	0.10114
0.10358	0.10171	0.10251	0.09778	0.10193	0.10077
0.10399	0.10125	0.10235	0.09816	0.10177	0.10147
0.10418	0.10178	0.10271	0.09747	0.10175	0.10130
0.10408	0.10172	0.10219	0.09774	0.10133	0.10156
0.10442	0.10184	0.10302	0.09814	0.09999	0.10165
0.10417	0.10232	0.10244	0.09803	0.10192	0.10176
0.10453	0.10190	0.10287	0.09801	0.10155	0.10141
0.10439	0.10197	0.10279	0.09864	0.10185	0.10189
0.10465	0.10229	0.10327	0.09822	0.10193	0.10176
0.10466	0.10194	0.10295	0.09876	0.10244	0.10178
0.10447	0.10229	0.10323	0.09833	0.10287	0.10195
0.10465	0.10218	0.10341	0.09839	0.10265	0.10183

0.10458	0.10223	0.10348	0.09780	0.10176	0.10190
0.10432	0.10247	0.10310	0.09872	0.10226	0.10191
0.10508	0.10282	0.10349	0.09902	0.10290	0.10234
0.10493	0.10268	0.10314	0.09885	0.10238	0.10252
0.10485	0.10270	0.10361	0.09901	0.10190	0.10264
0.10507	0.10283	0.10354	0.09908	0.10281	0.10208
0.10523	0.10275	0.10342	0.09906	0.10288	0.10256
0.10532	0.10320	0.10362	0.09906	0.10309	0.10236
0.10524	0.10309	0.10429	0.09936	0.10338	0.10248
0.10559	0.10283	0.10391	0.09934	0.10299	0.10292
0.10573	0.10325	0.10420	0.09946	0.10352	0.10282
0.10553	0.10282	0.10379	0.09936	0.10314	0.10255
0.10555	0.10377	0.10452	0.09944	0.10369	0.10313
0.10578	0.10249	0.10449	0.09933	0.10343	0.10327
0.10555	0.10286	0.10426	0.09907	0.10351	0.10285
0.10532	0.10313	0.10442	0.09950	0.10345	0.10303
0.10539	0.10355	0.10480	0.09992	0.10384	0.10320
0.10649	0.10380	0.10423	0.10003	0.10383	0.10352
0.10591	0.10356	0.10407	0.09993	0.10442	0.10350
0.10612	0.10343	0.10434	0.10030	0.10390	0.10318
0.10605	0.10409	0.10466	0.10014	0.10395	0.10384
0.10651	0.10382	0.10457	0.09969	0.10327	0.10387
0.10613	0.10428	0.10505	0.10010	0.10435	0.10423
0.10650	0.10401	0.10475	0.10002	0.10436	0.10378
0.10667	0.10438	0.10517	0.10018	0.10428	0.10338
0.10641	0.10420	0.10473	0.10039	0.10429	0.10367
0.10635	0.10442	0.10487	0.10062	0.10446	0.10336
0.10694	0.10475	0.10544	0.10036	0.10434	0.10425
0.10672	0.10443	0.10568	0.10094	0.10477	0.10395
0.10652	0.10449	0.10546	0.10067	0.10463	0.10425
0.10671	0.10466	0.10543	0.10042	0.10510	0.10418
0.10662	0.10449	0.10511	0.10062	0.10463	0.10395
0.10683	0.10488	0.10546	0.10125	0.10491	0.10442
0.10736	0.10467	0.10578	0.10100	0.10496	0.10432
0.10723	0.10501	0.10567	0.10092	0.10511	0.10438
0.10763	0.10499	0.10503	0.10121	0.10475	0.10462
0.10698	0.10487	0.10560	0.10098	0.10400	0.10473
0.10758	0.10508	0.10602	0.10052	0.10440	0.10462
0.10747	0.10508	0.10619	0.10132	0.10529	0.10513
0.10758	0.10510	0.10620	0.10132	0.10525	0.10469
0.10711	0.10516	0.10610	0.10178	0.10537	0.10501
0.10768	0.10544	0.10628	0.10108	0.10522	0.10511
0.10778	0.10598	0.10639	0.10211	0.10558	0.10528
0.10775	0.10537	0.10655	0.10169	0.10594	0.10529
0.10790	0.10597	0.10625	0.10145	0.10580	0.10436
0.10812	0.10508	0.10678	0.10149	0.10606	0.10573
0.10775	0.10581	0.10658	0.10212	0.10562	0.10560
0.10859	0.10605	0.10672	0.10226	0.10529	0.10577
0.10814	0.10603	0.10674	0.10214	0.10602	0.10562
0.10840	0.10603	0.10711	0.10229	0.10570	0.10548
0.10825	0.10638	0.10693	0.10241	0.10543	0.10568
0.10819	0.10610	0.10660	0.10217	0.10579	0.10592
0.10873	0.10654	0.10674	0.10239	0.10617	0.10584
0.10824	0.10613	0.10730	0.10221	0.10483	0.10596
0.10835	0.10644	0.10714	0.10249	0.10573	0.10601
0.10855	0.10628	0.10728	0.10247	0.10682	0.10589
0.10868	0.10639	0.10721	0.10261	0.10647	0.10647

0.10930	0.10682	0.10786	0.10297	0.10695	0.10658
0.10852	0.10680	0.10770	0.10262	0.10687	0.10596
0.10894	0.10641	0.10776	0.10308	0.10702	0.10646
0.10933	0.10652	0.10780	0.10262	0.10587	0.10635
0.10933	0.10709	0.10803	0.10322	0.10520	0.10669
0.10945	0.10728	0.10782	0.10336	0.10560	0.10684
0.10959	0.10699	0.10816	0.10284	0.10719	0.10688
0.10955	0.10731	0.10758	0.10319	0.10678	0.10697
0.10908	0.10669	0.10721	0.10307	0.10638	0.10663
0.10927	0.10720	0.10779	0.10311	0.10716	0.10715
0.10914	0.10745	0.10814	0.10338	0.10784	0.10726
0.10934	0.10723	0.10842	0.10347	0.10806	0.10679
0.10995	0.10722	0.10828	0.10380	0.10777	0.10724
0.10960	0.10760	0.10812	0.10354	0.10775	0.10742
0.11014	0.10746	0.10863	0.10384	0.10818	0.10728
0.10994	0.10772	0.10791	0.10359	0.10777	0.10737
0.10955	0.10786	0.10879	0.10380	0.10832	0.10733
0.10979	0.10753	0.10873	0.10376	0.10788	0.10754
0.11027	0.10788	0.10890	0.10379	0.10799	0.10754
0.11028	0.10787	0.10896	0.10438	0.10841	0.10777
0.11051	0.10806	0.10886	0.10472	0.10892	0.10763
0.11051	0.10799	0.10855	0.10393	0.10833	0.10789
0.11043	0.10810	0.10888	0.10430	0.10823	0.10771
0.11061	0.10835	0.10882	0.10427	0.10858	0.10807
0.11096	0.10844	0.10876	0.10437	0.10893	0.10759
0.11099	0.10873	0.10869	0.10463	0.10887	0.10808
0.11087	0.10837	0.10981	0.10448	0.10912	0.10829
0.11115	0.10803	0.10948	0.10423	0.10865	0.10830
0.11081	0.10865	0.10950	0.10500	0.10914	0.10829
0.11108	0.10857	0.10954	0.10478	0.10862	0.10812
0.11165	0.10888	0.10993	0.10476	0.10786	0.10863
0.11087	0.10887	0.10994	0.10481	0.10891	0.10838
0.11122	0.10898	0.10964	0.10485	0.10949	0.10855
0.11158	0.10904	0.10963	0.10492	0.10911	0.10832
0.11156	0.10929	0.11021	0.10513	0.10972	0.10866
0.11178	0.10936	0.11022	0.10527	0.10933	0.10873
0.11134	0.10875	0.11003	0.10508	0.10993	0.10895
0.11183	0.10918	0.10976	0.10538	0.10949	0.10880
0.11149	0.10921	0.11010	0.10512	0.10966	0.10902
0.11161	0.10922	0.10985	0.10540	0.10972	0.10867
0.11199	0.10935	0.11035	0.10550	0.10963	0.10936
0.11218	0.10908	0.11033	0.10571	0.10962	0.10931
0.11173	0.10990	0.11062	0.10539	0.10993	0.10930
0.11211	0.10927	0.11060	0.10561	0.11019	0.10903
0.11217	0.10973	0.11094	0.10583	0.11021	0.10949
0.11180	0.10988	0.11110	0.10628	0.10991	0.10957
0.11135	0.11000	0.11060	0.10584	0.10971	0.10941
0.11257	0.11002	0.11089	0.10567	0.11041	0.10952
0.11256	0.10989	0.11054	0.10636	0.11078	0.10966
0.11261	0.10969	0.11113	0.10607	0.11093	0.10971
0.11284	0.11023	0.11143	0.10626	0.11032	0.11026
0.11224	0.11039	0.11174	0.10628	0.11056	0.10973
0.11271	0.11020	0.11098	0.10639	0.11083	0.10996
0.11308	0.11026	0.11092	0.10617	0.11036	0.11021
0.11274	0.11050	0.11118	0.10648	0.11030	0.11004
0.11291	0.11041	0.11139	0.10676	0.11120	0.11026
0.11297	0.11085	0.11112	0.10657	0.11083	0.10995

0.11330	0.11026	0.11134	0.10686	0.11136	0.11030
0.11277	0.11067	0.11141	0.10682	0.11131	0.11027
0.11276	0.11076	0.11169	0.10715	0.11169	0.11054
0.11328	0.11136	0.11187	0.10704	0.11118	0.11081
0.11326	0.11103	0.11216	0.10715	0.11153	0.11031
0.11308	0.11093	0.11179	0.10665	0.11081	0.11088
0.11276	0.11095	0.11214	0.10748	0.11106	0.11010
0.11356	0.11109	0.11213	0.10695	0.11087	0.11052
0.11398	0.11158	0.11255	0.10741	0.11181	0.11095
0.11354	0.11139	0.11244	0.10739	0.11179	0.11120
0.11384	0.11138	0.11249	0.10756	0.11152	0.11146
0.11396	0.11134	0.11235	0.10758	0.11055	0.11095
0.11374	0.11147	0.11264	0.10748	0.11060	0.11123
0.11407	0.11186	0.11242	0.10715	0.11079	0.11144
0.11459	0.11190	0.11208	0.10781	0.11114	0.11174
0.11380	0.11188	0.11270	0.10782	0.11133	0.11134
0.11425	0.11164	0.11324	0.10793	0.11157	0.11178
0.11433	0.11210	0.11278	0.10789	0.11249	0.11133
0.11410	0.11193	0.11304	0.10790	0.11266	0.11174
0.11387	0.11200	0.11319	0.10814	0.11164	0.11195
0.11494	0.11193	0.11298	0.10837	0.11327	0.11152
0.11487	0.11202	0.11307	0.10815	0.11269	0.11213
0.11471	0.11229	0.11320	0.10826	0.11170	0.11176
0.11534	0.11198	0.11323	0.10824	0.11261	0.11220
0.11494	0.11216	0.11356	0.10841	0.11303	0.11224
0.11489	0.11259	0.11366	0.10855	0.11269	0.11221
0.11494	0.11192	0.11380	0.10854	0.11280	0.11216
0.11519	0.11291	0.11338	0.10897	0.11239	0.11246
0.11547	0.11259	0.11364	0.10907	0.11363	0.11278
0.11508	0.11282	0.11378	0.10851	0.11313	0.11247
0.11577	0.11264	0.11372	0.10888	0.11242	0.11256
0.11530	0.11288	0.11366	0.10892	0.11244	0.11267
0.11567	0.11281	0.11419	0.10914	0.11283	0.11257
0.11564	0.11314	0.11428	0.10907	0.11329	0.11304
0.11591	0.11327	0.11447	0.10917	0.11369	0.11287
0.11568	0.11328	0.11404	0.10883	0.11351	0.11275
0.11592	0.11334	0.11451	0.10886	0.11335	0.11311
0.11601	0.11335	0.11393	0.10914	0.11313	0.11287
0.11648	0.11359	0.11479	0.10969	0.11407	0.11337
0.11568	0.11354	0.11481	0.10974	0.11341	0.11373
0.11594	0.11325	0.11464	0.10931	0.11326	0.11337
0.11680	0.11358	0.11467	0.10961	0.11339	0.11344
0.11652	0.11334	0.11458	0.10936	0.11410	0.11346
0.11665	0.11394	0.11425	0.10985	0.11476	0.11365
0.11686	0.11382	0.11498	0.10991	0.11432	0.11349
0.11631	0.11417	0.11504	0.10982	0.11487	0.11323
0.11670	0.11407	0.11507	0.10983	0.11433	0.11368
0.11681	0.11415	0.11515	0.10996	0.11445	0.11379
0.11709	0.11415	0.11528	0.10987	0.11449	0.11381
0.11694	0.11391	0.11472	0.11028	0.11502	0.11438
0.11711	0.11438	0.11525	0.10992	0.11475	0.11379
0.11741	0.11404	0.11521	0.11031	0.11499	0.11452
0.11674	0.11438	0.11539	0.11017	0.11498	0.11388
0.11717	0.11484	0.11550	0.11056	0.11530	0.11468
0.11714	0.11457	0.11602	0.11043	0.11533	0.11411
0.11696	0.11432	0.11601	0.11055	0.11400	0.11460
0.11695	0.11482	0.11593	0.11032	0.11371	0.11430

0.11744	0.11446	0.11575	0.11099	0.11572	0.11472
0.11748	0.11527	0.11579	0.11108	0.11473	0.11526
0.11732	0.11502	0.11587	0.11018	0.11557	0.11445
0.11784	0.11500	0.11572	0.11030	0.11589	0.11468
0.11808	0.11474	0.11583	0.11131	0.11572	0.11505
0.11827	0.11506	0.11588	0.11121	0.11568	0.11505
0.11819	0.11553	0.11625	0.11096	0.11627	0.11529
0.11809	0.11548	0.11612	0.11117	0.11620	0.11509
0.11824	0.11513	0.11634	0.11121	0.11576	0.11526
0.11801	0.11535	0.11641	0.11128	0.11599	0.11494
0.11810	0.11551	0.11590	0.11142	0.11604	0.11512
0.11774	0.11588	0.11616	0.11117	0.11663	0.11555
0.11841	0.11564	0.11717	0.11206	0.11694	0.11546
0.11833	0.11610	0.11638	0.11185	0.11681	0.11570
0.11829	0.11528	0.11705	0.11187	0.11674	0.11535
0.11813	0.11597	0.11699	0.11161	0.11646	0.11544
0.11865	0.11588	0.11716	0.11204	0.11672	0.11591
0.11856	0.11591	0.11707	0.11200	0.11729	0.11551
0.11891	0.11620	0.11661	0.11231	0.11680	0.11589
0.11946	0.11623	0.11683	0.11198	0.11629	0.11565
0.11903	0.11616	0.11762	0.11197	0.11651	0.11614
0.11918	0.11648	0.11724	0.11201	0.11689	0.11636
0.11899	0.11628	0.11760	0.11234	0.11664	0.11616
0.11874	0.11628	0.11774	0.11235	0.11681	0.11642
0.11896	0.11627	0.11766	0.11207	0.11711	0.11625
0.11882	0.11650	0.11753	0.11253	0.11763	0.11636
0.11963	0.11668	0.11740	0.11298	0.11747	0.11653
0.11928	0.11675	0.11797	0.11237	0.11786	0.11670
0.11986	0.11674	0.11797	0.11302	0.11757	0.11662
0.11980	0.11684	0.11760	0.11275	0.11669	0.11678
0.11965	0.11670	0.11799	0.11250	0.11661	0.11651
0.11997	0.11737	0.11822	0.11292	0.11766	0.11715
0.11960	0.11701	0.11851	0.11290	0.11795	0.11642
0.11967	0.11697	0.11781	0.11326	0.11808	0.11684
0.12018	0.11691	0.11775	0.11269	0.11835	0.11697
0.11993	0.11741	0.11837	0.11308	0.11883	0.11693
0.12011	0.11770	0.11851	0.11380	0.11852	0.11693
0.11994	0.11730	0.11755	0.11338	0.11898	0.11724
0.12053	0.11743	0.11794	0.11328	0.11871	0.11714
0.12004	0.11736	0.11842	0.11388	0.11844	0.11750
0.12006	0.11733	0.11859	0.11321	0.11813	0.11754
0.12061	0.11802	0.11826	0.11385	0.11863	0.11719
0.12046	0.11768	0.11863	0.11329	0.11893	0.11762
0.12014	0.11763	0.11822	0.11377	0.11892	0.11771
0.11979	0.11771	0.11871	0.11367	0.11911	0.11796
0.12039	0.11835	0.11873	0.11408	0.11896	0.11817
0.12069	0.11785	0.11906	0.11408	0.11818	0.11817
0.12011	0.11819	0.11940	0.11408	0.11927	0.11810
0.12059	0.11809	0.11904	0.11393	0.11908	0.11743
0.12096	0.11865	0.11897	0.11471	0.11924	0.11780
0.12082	0.11801	0.11954	0.11420	0.11947	0.11818
0.12136	0.11873	0.11883	0.11451	0.11884	0.11824
0.12141	0.11834	0.11922	0.11471	0.11769	0.11853
0.12130	0.11845	0.11942	0.11474	0.11787	0.11836
0.12144	0.11855	0.11925	0.11456	0.11849	0.11860
0.12155	0.11893	0.11929	0.11461	0.11839	0.11886
0.12136	0.11896	0.11956	0.11497	0.11973	0.11884

0.12137	0.11894	0.12011	0.11486	0.12016	0.11882
0.12205	0.11893	0.12004	0.11477	0.12029	0.11860
0.12175	0.11896	0.11971	0.11485	0.12022	0.11942
0.12131	0.11893	0.12009	0.11506	0.12051	0.11902
0.12210	0.11941	0.12024	0.11550	0.12035	0.11891
0.12177	0.11930	0.12069	0.11485	0.12041	0.11924
0.12189	0.11938	0.12049	0.11506	0.12038	0.11876
0.12187	0.11937	0.12031	0.11515	0.12054	0.11932
0.12201	0.11915	0.11983	0.11532	0.12035	0.11934
0.12204	0.11981	0.12059	0.11563	0.12065	0.11968
0.12202	0.11988	0.12020	0.11535	0.12095	0.11917
0.12234	0.11948	0.12028	0.11551	0.12103	0.11948
0.12266	0.11981	0.12058	0.11575	0.12093	0.11983
0.12271	0.12011	0.12103	0.11573	0.12103	0.11921
0.12309	0.12013	0.12084	0.11565	0.12056	0.11947
0.12225	0.11984	0.12129	0.11577	0.12122	0.11968
0.12244	0.11997	0.12065	0.11595	0.12112	0.11895
0.12305	0.12029	0.12086	0.11609	0.12138	0.12014
0.12280	0.12017	0.12096	0.11630	0.12071	0.11988
0.12288	0.12055	0.12080	0.11614	0.12122	0.12033
0.12297	0.12042	0.12126	0.11609	0.12157	0.11947
0.12304	0.12049	0.12095	0.11634	0.12187	0.12032
0.12290	0.12036	0.12166	0.11566	0.12128	0.11941
0.12314	0.12083	0.12180	0.11632	0.12137	0.12056
0.12334	0.12061	0.12167	0.11650	0.12175	0.12076
0.12336	0.12093	0.12170	0.11626	0.12222	0.12027
0.12329	0.12032	0.12193	0.11661	0.12028	0.12057
0.12365	0.12088	0.12194	0.11687	0.12180	0.12118
0.12353	0.12090	0.12177	0.11633	0.12165	0.12084
0.12410	0.12109	0.12152	0.11700	0.12175	0.12100
0.12384	0.12110	0.12228	0.11698	0.12214	0.12061
0.12369	0.12107	0.12233	0.11735	0.12264	0.12076
0.12385	0.12099	0.12243	0.11707	0.12218	0.12087
0.12422	0.12160	0.12239	0.11711	0.12257	0.12130
0.12413	0.12127	0.12250	0.11757	0.12225	0.12098
0.12400	0.12153	0.12221	0.11711	0.12281	0.12132
0.12385	0.12130	0.12258	0.11699	0.12288	0.12161
0.12333	0.12160	0.12231	0.11702	0.12252	0.12075
0.12341	0.12165	0.12263	0.11744	0.12261	0.12138
0.12424	0.12204	0.12268	0.11762	0.12311	0.12128
0.12429	0.12157	0.12305	0.11699	0.12312	0.12154
0.12433	0.12173	0.12229	0.11752	0.12318	0.12146
0.12481	0.12203	0.12283	0.11743	0.12308	0.12117
0.12469	0.12164	0.12262	0.11744	0.12325	0.12199
0.12519	0.12224	0.12319	0.11829	0.12301	0.12195
0.12476	0.12234	0.12289	0.11802	0.12302	0.12174
0.12515	0.12214	0.12342	0.11784	0.12191	0.12203
0.12493	0.12268	0.12340	0.11826	0.12262	0.12186
0.12478	0.12201	0.12322	0.11814	0.12365	0.12212
0.12501	0.12239	0.12282	0.11821	0.12327	0.12253
0.12536	0.12238	0.12360	0.11816	0.12395	0.12217
0.12550	0.12249	0.12325	0.11863	0.12380	0.12183
0.12532	0.12244	0.12393	0.11796	0.12377	0.12238
0.12539	0.12288	0.12377	0.11858	0.12378	0.12262
0.12563	0.12290	0.12372	0.11886	0.12414	0.12266
0.12543	0.12266	0.12405	0.11869	0.12432	0.12257
0.12544	0.12274	0.12377	0.11861	0.12431	0.12259

0.12459	0.12287	0.12360	0.11875	0.12408	0.12276
0.12525	0.12277	0.12383	0.11865	0.12432	0.12295
0.12574	0.12344	0.12412	0.11936	0.12434	0.12312
0.12600	0.12307	0.12417	0.11907	0.12469	0.12304
0.12585	0.12313	0.12397	0.11885	0.12411	0.12285
0.12651	0.12319	0.12458	0.11912	0.12247	0.12327
0.12627	0.12342	0.12458	0.11938	0.12397	0.12319
0.12643	0.12377	0.12434	0.11923	0.12512	0.12353
0.12606	0.12406	0.12445	0.11885	0.12445	0.12348
0.12661	0.12364	0.12426	0.11913	0.12504	0.12367
0.12632	0.12397	0.12459	0.11961	0.12480	0.12337
0.12664	0.12396	0.12490	0.11943	0.12450	0.12406
0.12645	0.12399	0.12482	0.11971	0.12503	0.12376
0.12687	0.12389	0.12512	0.11971	0.12503	0.12394
0.12628	0.12408	0.12483	0.11974	0.12525	0.12372
0.12693	0.12412	0.12497	0.11977	0.12570	0.12430
0.12672	0.12417	0.12496	0.12004	0.12515	0.12406
0.12743	0.12466	0.12495	0.12035	0.12521	0.12387
0.12668	0.12370	0.12531	0.11955	0.12591	0.12424
0.12688	0.12447	0.12519	0.12000	0.12565	0.12450
0.12749	0.12401	0.12513	0.12041	0.12546	0.12434
0.12730	0.12444	0.12528	0.12021	0.12573	0.12431
0.12773	0.12473	0.12591	0.12030	0.12603	0.12472
0.12728	0.12473	0.12545	0.12044	0.12630	0.12471
0.12749	0.12467	0.12551	0.12016	0.12582	0.12425
0.12771	0.12487	0.12576	0.12027	0.12615	0.12445
0.12760	0.12486	0.12579	0.12090	0.12634	0.12441
0.12763	0.12514	0.12575	0.12081	0.12636	0.12410
0.12772	0.12487	0.12605	0.12039	0.12626	0.12501
0.12822	0.12513	0.12624	0.12103	0.12675	0.12490
0.12782	0.12538	0.12605	0.12082	0.12662	0.12488
0.12800	0.12522	0.12590	0.12134	0.12656	0.12463
0.12807	0.12528	0.12610	0.12080	0.12650	0.12514
0.12743	0.12581	0.12659	0.12108	0.12680	0.12516
0.12797	0.12568	0.12634	0.12100	0.12667	0.12544
0.12829	0.12594	0.12572	0.12149	0.12685	0.12530
0.12838	0.12561	0.12669	0.12121	0.12680	0.12533
0.12886	0.12605	0.12660	0.12171	0.12745	0.12569
0.12852	0.12519	0.12684	0.12124	0.12706	0.12583
0.12894	0.12602	0.12662	0.12204	0.12601	0.12557
0.12890	0.12608	0.12631	0.12140	0.12653	0.12606
0.12911	0.12623	0.12698	0.12074	0.12765	0.12578
0.12893	0.12609	0.12672	0.12206	0.12769	0.12557
0.12923	0.12607	0.12727	0.12182	0.12740	0.12576
0.12879	0.12613	0.12716	0.12194	0.12761	0.12597
0.12845	0.12612	0.12763	0.12185	0.12734	0.12618
0.12927	0.12639	0.12735	0.12143	0.12804	0.12634
0.12980	0.12678	0.12730	0.12276	0.12768	0.12620
0.12907	0.12646	0.12761	0.12201	0.12744	0.12672
0.12980	0.12653	0.12668	0.12188	0.12777	0.12592
0.12928	0.12659	0.12760	0.12263	0.12831	0.12668
0.12927	0.12681	0.12787	0.12257	0.12797	0.12665
0.12946	0.12696	0.12781	0.12290	0.12860	0.12729
0.12984	0.12708	0.12769	0.12261	0.12783	0.12685
0.13021	0.12685	0.12796	0.12200	0.12799	0.12650
0.13008	0.12711	0.12760	0.12230	0.12785	0.12698
0.12994	0.12681	0.12831	0.12267	0.12853	0.12693

0.13024	0.12709	0.12786	0.12302	0.12856	0.12709
0.13008	0.12755	0.12832	0.12284	0.12827	0.12716
0.13033	0.12721	0.12804	0.12267	0.12813	0.12724
0.13009	0.12744	0.12851	0.12333	0.12899	0.12727
0.13021	0.12762	0.12835	0.12307	0.12894	0.12730
0.13074	0.12751	0.12853	0.12335	0.12908	0.12791
0.13044	0.12774	0.12843	0.12286	0.12894	0.12706
0.13043	0.12796	0.12857	0.12312	0.12923	0.12770
0.13075	0.12744	0.12868	0.12328	0.12910	0.12718
0.13000	0.12799	0.12900	0.12342	0.12941	0.12776
0.13082	0.12807	0.12858	0.12333	0.12947	0.12763
0.13068	0.12816	0.12929	0.12356	0.12952	0.12785
0.13101	0.12799	0.12881	0.12384	0.12921	0.12819
0.13093	0.12833	0.12886	0.12431	0.12964	0.12794
0.13133	0.12772	0.12858	0.12323	0.12981	0.12794
0.13117	0.12825	0.12897	0.12417	0.12959	0.12863
0.13107	0.12819	0.12891	0.12399	0.12926	0.12800
0.13116	0.12842	0.12944	0.12402	0.12975	0.12824
0.13149	0.12829	0.12905	0.12412	0.12981	0.12837
0.13086	0.12891	0.12972	0.12461	0.13019	0.12845
0.13143	0.12868	0.12944	0.12425	0.12931	0.12872
0.13132	0.12867	0.13012	0.12427	0.12993	0.12828
0.13146	0.12832	0.12950	0.12432	0.13034	0.12879
0.13152	0.12902	0.12984	0.12449	0.13062	0.12886
0.13124	0.12844	0.12961	0.12459	0.13049	0.12876
0.13180	0.12934	0.13012	0.12486	0.13065	0.12884
0.13203	0.12905	0.12987	0.12452	0.13066	0.12858
0.13225	0.12881	0.13047	0.12469	0.13052	0.12914
0.13220	0.12930	0.12954	0.12470	0.12978	0.12910
0.13219	0.12956	0.13017	0.12499	0.13075	0.12934
0.13267	0.12923	0.13023	0.12485	0.13093	0.12961
0.13200	0.12986	0.13033	0.12472	0.13117	0.12939
0.13234	0.12956	0.13012	0.12504	0.13109	0.12850
0.13201	0.12961	0.13058	0.12524	0.13114	0.12928
0.13216	0.12961	0.13032	0.12507	0.13116	0.12959
0.13257	0.13005	0.13083	0.12530	0.13134	0.12967
0.13282	0.12945	0.13110	0.12555	0.13163	0.12988
0.13227	0.12993	0.13072	0.12550	0.13139	0.12970
0.13176	0.13011	0.13078	0.12545	0.13139	0.13014
0.13201	0.13023	0.13120	0.12554	0.13141	0.12978
0.13254	0.13024	0.13090	0.12566	0.13135	0.12990
0.13278	0.13007	0.13094	0.12572	0.13142	0.13009
0.13292	0.13024	0.13084	0.12587	0.13167	0.13065
0.13295	0.13030	0.13086	0.12603	0.13182	0.13043
0.13347	0.13083	0.13134	0.12606	0.13158	0.13021
0.13328	0.13057	0.13145	0.12623	0.13104	0.13030
0.13289	0.13028	0.13166	0.12659	0.13189	0.12966
0.13321	0.13043	0.13113	0.12532	0.13228	0.13053
0.13364	0.13072	0.13119	0.12589	0.13211	0.12991
0.13330	0.13051	0.13135	0.12634	0.13209	0.13021
0.13362	0.13103	0.13214	0.12645	0.13211	0.13083
0.13348	0.13097	0.13188	0.12597	0.13236	0.13045
0.13352	0.13086	0.13169	0.12642	0.13233	0.13088
0.13358	0.13147	0.13186	0.12659	0.13257	0.13083
0.13376	0.13083	0.13212	0.12673	0.13279	0.13050
0.13413	0.13139	0.13215	0.12668	0.13254	0.13094
0.13411	0.13141	0.13237	0.12653	0.13293	0.13105

0.13378	0.13129	0.13187	0.12686	0.13258	0.13127
0.13379	0.13138	0.13236	0.12714	0.13314	0.13168
0.13392	0.13148	0.13250	0.12679	0.13282	0.13121
0.13485	0.13149	0.13284	0.12764	0.13307	0.13193
0.13447	0.13160	0.13260	0.12677	0.13323	0.13141
0.13463	0.13164	0.13274	0.12696	0.13359	0.13201
0.13456	0.13168	0.13235	0.12720	0.13316	0.13152
0.13445	0.13144	0.13274	0.12754	0.13355	0.13134
0.13485	0.13202	0.13276	0.12768	0.13314	0.13151
0.13469	0.13171	0.13325	0.12749	0.13315	0.13129
0.13483	0.13238	0.13271	0.12768	0.13317	0.13198
0.13450	0.13217	0.13306	0.12800	0.13355	0.13229
0.13511	0.13208	0.13298	0.12735	0.13361	0.13223
0.13503	0.13242	0.13317	0.12805	0.13423	0.13202
0.13508	0.13226	0.13329	0.12810	0.13330	0.13246
0.13531	0.13242	0.13342	0.12856	0.13268	0.13238
0.13542	0.13247	0.13314	0.12813	0.13309	0.13255
0.13513	0.13289	0.13339	0.12811	0.13358	0.13264
0.13581	0.13253	0.13357	0.12815	0.13412	0.13282
0.13566	0.13234	0.13360	0.12806	0.13421	0.13267
0.13552	0.13256	0.13363	0.12825	0.13413	0.13314
0.13564	0.13305	0.13402	0.12799	0.13316	0.13254
0.13562	0.13306	0.13349	0.12795	0.13393	0.13232
0.13613	0.13302	0.13384	0.12928	0.13480	0.13306
0.13607	0.13274	0.13422	0.12841	0.13506	0.13254
0.13640	0.13284	0.13440	0.12873	0.13432	0.13301
0.13626	0.13280	0.13409	0.12886	0.13436	0.13319
0.13650	0.13331	0.13426	0.12890	0.13481	0.13323
0.13659	0.13363	0.13441	0.12892	0.13508	0.13358
0.13630	0.13351	0.13439	0.12891	0.13482	0.13342
0.13615	0.13325	0.13432	0.12916	0.13408	0.13341
0.13611	0.13383	0.13434	0.12953	0.13480	0.13351
0.13604	0.13344	0.13458	0.12917	0.13521	0.13394
0.13664	0.13393	0.13449	0.12865	0.13500	0.13353
0.13631	0.13378	0.13476	0.12937	0.13502	0.13401
0.13612	0.13364	0.13499	0.12947	0.13540	0.13417
0.13629	0.13391	0.13485	0.12922	0.13602	0.13366
0.13658	0.13388	0.13509	0.12954	0.13525	0.13329
0.13721	0.13393	0.13509	0.12967	0.13461	0.13368
0.13701	0.13430	0.13516	0.12978	0.13457	0.13332
0.13722	0.13403	0.13493	0.12964	0.13533	0.13422
0.13713	0.13477	0.13513	0.12960	0.13572	0.13333
0.13732	0.13431	0.13564	0.13058	0.13653	0.13445
0.13753	0.13477	0.13556	0.13002	0.13602	0.13393
0.13703	0.13466	0.13543	0.13022	0.13619	0.13435
0.13711	0.13481	0.13557	0.12991	0.13628	0.13444
0.13756	0.13423	0.13546	0.13051	0.13657	0.13423
0.13742	0.13473	0.13549	0.13066	0.13671	0.13478
0.13776	0.13487	0.13567	0.13056	0.13617	0.13539
0.13721	0.13495	0.13550	0.13077	0.13644	0.13543
0.13740	0.13504	0.13593	0.13043	0.13697	0.13494
0.13745	0.13528	0.13600	0.13002	0.13668	0.13453
0.13756	0.13524	0.13588	0.13093	0.13721	0.13514
0.13757	0.13534	0.13589	0.13073	0.13664	0.13522
0.13789	0.13515	0.13621	0.13054	0.13745	0.13492
0.13805	0.13511	0.13620	0.13090	0.13683	0.13470
0.13855	0.13560	0.13637	0.12301	0.13710	0.13567

0.13808	0.13539	0.13624	0.11149	0.13694	0.13555
0.13894	0.13562	-0.36202	0.09835	0.13741	0.13595
0.13822	0.13576	0.10715	0.10334	0.13723	0.13504
0.13829	0.13573	0.11810	0.09353	0.13738	0.13519
0.13873	0.13573	0.07408	-0.01749	0.13750	0.13540
0.13869	0.13578	-0.01024	0.11067	0.13764	0.13557
0.13860	0.13593	-2.37347	0.08586	0.13691	0.13596
0.13900	0.13620	-12.45767	-0.04704	0.13729	0.13578
0.13826	0.13579	-38.19851	0.01079	0.13766	0.13602
0.13817	0.13631	-63.47843	-0.05509	0.13765	0.13593
0.13841	0.13581	-67.00162	-0.57938	0.13772	0.13565
0.13907	0.13625	-68.45848	-6.60204	0.13809	0.13605
0.13853	0.13584	-72.63518	-27.84472	0.13783	0.13590
0.13933	0.12714	-77.30136	-66.09859	0.13767	0.13596
0.13926	0.13509	-78.47161	-77.72908	0.13756	0.13607
0.13937	0.08903	-78.01198	-75.55962	0.13773	0.13659
0.13943	-0.06567	-76.13322	-74.25900	0.13831	0.13665
0.13983	-1.55580	-74.55905	-72.57435	0.13851	0.13620
0.13988	-8.61236	-73.28677	-71.17482	0.13839	0.13665
0.13987	-31.56022	-72.40263	-71.00281	0.13915	0.13640
0.13973	-54.67913	-74.51374	-71.01090	0.13891	0.13731
0.14022	-65.05284	-77.41364	-71.18183	0.13859	0.13752
0.13975	-70.62255	-77.41239	-71.38158	0.13899	0.13744
0.13988	-71.55154	-77.13845	-71.60662	0.13903	0.13729
0.13948	-70.14128	-76.44926	-7.77984	0.13894	0.13625
0.13953	-69.51264	-76.56593	-2.13658	0.13886	0.13719
0.13953	-68.15571	-75.75905	-1.68594	0.13906	0.13727
0.14049	-70.35136	-4.17934	-1.71444	0.13951	0.13737
0.14042	-71.94958	-2.17918	-1.75550	0.13894	0.13697
0.14033	-72.35162	-2.81220	-2.43810	0.13926	0.13748
0.13992	-75.32650	-2.80542	-2.43857	0.13921	0.13800
0.14034	-75.70346	-2.46945	-2.61577	0.14001	0.13764
0.14150	-75.38725	-2.63801	-2.61132	0.13901	0.13823
0.14089	-75.59710	-2.81220	-2.68326	0.13876	0.13788
0.13602	-75.91935	-3.16888	-2.78783	0.13968	0.13794
0.12880	-76.17337	-3.85507	-2.94956	0.13811	0.13788
0.04412	-76.14149	-2.80051	-3.15765	0.13030	0.13813
-0.19527	-75.99920	-2.65015	-3.02131	0.14396	0.13813
-0.00775	-76.02940	-2.54956	-3.17828	0.14644	0.13849
0.05379	-76.44545	-2.11647	-3.38554	0.13741	0.13855
0.05825	-76.47668	-1.93204	-4.21203	0.01047	0.13773
-1.11234	-78.27429	-2.21817	-2.10085	0.11267	0.13837
-3.02580	-50.52081	0.66580	0.60363	0.13976	0.13843
-0.41370	-8.47076	1.71463	-0.32769	0.14104	0.13834
-0.28043	7.49644	14.33239	17.20099	0.14141	0.13848
0.29783	3.18536	17.86375	21.43866	0.14177	0.13892
1.52418	6.33538	18.84634	15.38242	0.14265	0.13901
1.50970	3.46574	16.66938	10.50943	0.14309	0.13875
1.32705	-7.90432	17.99778	21.91029	0.14404	0.13841
1.47719	3.99980	18.75982	13.71799	0.14316	0.13903
1.34161	19.45509	22.12918	16.27085	0.14387	0.13827
0.62463	18.98993	16.03978	13.67508	0.07700	0.13943
0.68914	31.18129	13.86987	14.74096	0.14641	0.13952
0.18236	22.38897	16.29064	15.96351	0.14457	0.13941
-0.64601	22.50032	18.16153	17.67707	0.14492	0.13945
-1.41465	21.93935	18.71471	16.55255	0.05786	0.13985
-1.89801	17.92045	17.56684	18.18407	-0.07363	0.13973

-1.72497	13.41981	16.49448	16.31185	0.12106	0.13954
-1.43954	14.97581	14.21560	17.36737	0.13825	0.13977
-0.95345	17.26557	14.99575	18.20810	0.10581	0.13929
-0.58119	19.63276	22.42845	16.02670	-0.33272	0.13962
-0.37321	17.53862	20.59006	13.72724	-5.63350	0.13958
0.03237	17.03778	23.09575	18.88543	-5.11439	0.13998
-0.07988	16.07641	13.97373	19.49802	-2.76295	0.13978
0.02384	15.41438	13.62542	20.88205	-0.65740	0.14031
0.64900	15.20457	15.31994	15.81975	-0.08665	0.14007
1.21144	15.54640	15.16603	17.55759	-0.32180	0.14029
-0.39940	17.29005	7.59226	14.21850	-0.55177	0.14028
-1.76318	18.04132	12.58041	16.05985	-0.42027	0.13980
-4.33354	16.62505	22.65878	13.05437	-0.53463	0.14044
-3.68348	16.76962	20.18805	14.51937	-0.92749	0.14046
-3.19398	17.36744	18.01176	15.43274	-0.74812	0.14092
-2.32905	17.14631	16.74053	15.74018	-0.82033	0.14016
-2.07122	16.48612	14.95517	16.24165	-0.88883	0.14092
-0.55937	16.86960	15.28959	16.02441	-0.91678	0.14094
-0.34261	17.28571	16.41204	15.55773	-0.89751	0.14047
1.35648	17.01452	16.21762	15.77664	-0.89758	0.14109
1.71070	16.70353	15.29856	16.13455	-0.53048	0.14148
2.11688	16.77393	15.27365	16.01685	-0.39999	0.14122
2.02493	17.30090	16.17698	15.72757	-0.49479	0.14081
1.83077	17.08298	16.25363	15.73729	-0.31355	0.14113
1.77876	16.63026	15.38085	15.99334	0.15601	0.14156
1.85646	16.82986	15.26099	16.06781	0.77663	0.14159
1.81939	17.30547	16.15368	15.81645	0.92862	0.14192
1.70391	17.08203	16.23973	15.69912	0.62764	0.14178
1.51924	16.56995	15.39074	15.93083	0.36042	0.14210
1.50393	16.93810	15.32728	16.07748	-0.05962	0.14175
1.57467	17.26628	16.12858	15.86816	-0.60406	0.14214
1.39290	17.00233	16.16411	15.71258	-1.98469	0.14228
1.44953	16.68908	15.45164	15.88653	-2.57930	0.14181
1.47968	16.88948	15.39361	16.04832	-2.41056	0.14125
1.47628	17.24786	16.02927	15.93321	-2.15355	0.14205
1.46173	17.01282	16.16168	15.74460	0.33555	0.14160
1.45413	16.68341	15.55650	15.80818	0.65355	0.14188
1.48880	16.91046	15.36087	16.02105	1.04194	0.14240
1.44545	17.23763	15.96350	15.99857	0.94822	0.14163
1.45048	17.00283	16.18028	15.77347	0.10433	0.14272
1.18458	16.67143	15.58494	15.77363	-0.43109	0.14202
0.99322	16.95703	15.38450	15.97413	5.18032	0.14248
1.20031	17.22512	15.92811	16.02045	31.67355	0.14263
24.85937	16.96377	16.13240	15.84007	22.54397	0.14286
13.99797	16.70844	15.64039	15.75870	19.01531	0.14306
24.49874	16.96741	15.43120	15.91329	19.50009	0.14317
20.56076	17.20942	15.86401	16.02050	19.35409	0.14256
18.49306	16.94788	16.09839	15.90301	18.73708	0.14325
13.54348	16.73738	15.70692	15.77244	16.28346	0.14315
17.53643	16.96562	15.45150	15.84684	17.71303	0.14300
15.95064	17.20239	15.80970	15.97276	20.62556	0.14330
15.29226	16.95212	16.08701	15.94951	19.14452	0.14355
18.43314	16.72969	15.74869	15.80968	17.84833	0.14375
17.54357	16.99123	15.46602	15.81169	18.05003	0.14414
20.36972	17.19016	15.78829	15.93098	17.83654	0.14400
15.37526	16.93761	16.05970	15.95940	16.30246	0.14381
16.48095	16.74545	15.77394	15.85553	18.66113	0.14377

21.76496	17.00253	15.50892	15.83380	18.17479	0.14387
13.25904	17.17749	15.75616	15.91790	16.24089	0.14440
14.90153	16.92713	16.02146	15.93829	16.86837	0.14427
16.48331	16.76785	15.81128	15.88203	16.40640	0.14385
21.51954	17.00466	15.53731	15.84160	15.54514	0.14468
19.10634	17.16510	15.71996	15.88947	18.97993	0.14403
17.13304	16.92966	16.00175	15.94961	19.98833	0.14430
14.13853	16.77508	15.84121	15.91275	19.24552	0.14436
16.80122	17.01331	15.55883	15.83453	17.69431	0.14362
16.90645	17.15319	15.69813	15.86942	18.25512	0.14415
19.81194	16.92279	15.98047	15.94656	17.94908	0.14393
17.67149	16.78877	15.85780	15.93955	17.11624	0.14488
15.27517	17.02238	15.59043	15.85693	18.29715	0.14489
13.13710	17.14197	15.68360	15.84349	15.75354	0.14464
13.55415	16.91718	15.94287	15.91401	17.34062	0.14496
14.97838	16.80234	15.87616	15.94938	17.88855	0.14506
14.94371	17.02581	15.62720	15.89698	18.84141	0.14513
13.95013	17.13744	15.66429	15.84559	14.25732	0.14534
13.70481	16.91006	15.91304	15.88098	12.42253	0.14533
14.32046	16.81322	15.89420	15.94332	12.54974	0.14527
14.70661	17.03322	15.65356	15.92307	16.25826	0.14493
14.46198	17.12788	15.65675	15.85805	16.62602	0.14467
14.04009	16.90833	15.88661	15.86822	16.83567	0.14545
13.96726	16.82037	15.89945	15.92309	15.12406	0.14559
14.27234	17.03831	15.68280	15.93002	15.22815	0.14498
14.56370	17.11905	15.65543	15.88052	15.74007	0.14541
14.47094	16.90464	15.85880	15.86067	15.66216	0.14542
14.13161	16.82928	15.89950	15.90301	15.07961	0.14553
14.00514	17.04283	15.71087	15.93591	15.43569	0.10799
14.22873	17.10932	15.65992	15.90260	15.69601	0.08357
14.48330	16.89845	15.83210	15.86198	15.54651	0.01452
14.47750	16.83677	15.89654	15.88109	15.13080	-0.06466
14.22022	17.05500	15.73527	15.92854	15.44566	-4.68683
14.03182	17.09579	15.66174	15.92323	15.79608	-32.19209
14.16840	16.88596	15.81163	15.87473	15.36082	-60.16799
14.43122	16.86445	15.89341	15.87020	15.18363	-74.72771
14.48192	17.05366	15.75355	15.90963	15.56206	-74.71994
14.28057	17.07646	15.66803	15.92827	15.72539	-73.46307
14.07903	16.89568	15.79375	15.89412	15.27894	-72.21656
14.12694	16.86992	15.88732	15.86916	15.25576	-74.95757
14.36480	17.04797	15.77229	15.89143	15.64316	-74.97969
14.48003	17.07315	15.67347	15.92486	15.60352	-75.19065
14.33963	16.90006	15.77761	15.91254	15.27103	-75.70493
14.12263	16.87099	15.87784	15.87785	15.31982	-75.60281
14.10751	17.05042	15.78790	15.88156	15.66019	-75.64453
14.30290	17.07276	15.68702	15.91587	15.54779	-75.93160
14.45605	16.89091	15.76409	15.92143	15.24945	-77.83411
14.38470	16.88228	15.86710	15.88910	15.38379	-60.51164
14.17894	17.05571	15.80185	15.87762	15.66347	-34.55504
14.09787	17.06037	15.69990	15.90142	15.50362	-7.06497
14.24534	16.89064	15.75303	15.92027	15.22945	-1.50054
14.42810	16.89462	15.85531	15.90295	15.44947	9.55238
14.41334	17.05499	15.81358	15.87957	15.66994	10.55585
14.23406	17.04978	15.71191	15.88769	15.42337	12.53377
14.11070	16.89958	15.74321	15.91625	15.25553	15.86571
14.19657	16.89550	15.84645	15.91339	15.50773	17.59196
14.38266	17.05206	15.82126	15.88600	15.64496	15.70327

14.43217	17.05184	15.72113	15.88177	15.36653	16.79851
14.28508	16.89640	15.74008	15.90672	15.29210	22.72172
14.13423	16.90210	15.83557	15.91818	15.55944	19.17007
14.16596	17.05134	15.82338	15.89889	15.59267	16.04424
14.33403	17.04594	15.73464	15.88208	15.34130	12.05275
14.42912	16.89642	15.73663	15.89399	15.32931	5.80374
14.33482	16.91360	15.82142	15.91644	15.58651	19.60224
14.17050	17.05241	15.82799	15.91109	15.55559	19.14599
14.14323	17.03417	15.74688	15.88989	15.31424	16.43327
14.28689	16.90220	15.73513	15.88754	15.37501	18.90107
14.41312	16.91388	15.81052	15.90994	15.60244	19.58757
14.37142	17.05316	15.83232	15.91534	15.51436	19.01287
14.21558	17.03484	15.75977	15.89696	15.30351	16.23894
14.14003	16.90320	15.73285	15.88614	15.42052	16.14006
14.23820	16.91785	15.80247	15.89959	15.60613	15.14730
14.38496	17.05182	15.83192	15.91303	15.46674	16.33321
14.39473	17.03364	15.76875	15.90507	15.30954	18.43489
14.26134	16.89872	15.73521	15.89139	15.46101	18.09707
14.15279	16.93169	15.79269	15.89379	15.59971	18.57891
14.20276	17.04888	15.82646	15.91091	15.42682	13.24187
14.34537	17.02086	15.77917	15.91417	15.32041	17.33274
14.40150	16.91010	15.74027	15.89453	15.50152	18.10340
14.30592	16.93456	15.78299	15.88756	15.57742	18.63462
14.17739	17.04734	15.82670	15.90424	15.39937	15.02254
14.17917	17.01930	15.78658	15.91414	15.33885	14.97639
14.30494	16.91112	15.74204	15.90215	15.53116	15.20060
14.39473	16.93368	15.77732	15.88666	15.55655	16.15622
14.33983	17.04736	15.82320	15.89612	15.37067	15.91632
14.21160	17.02071	15.79166	15.91081	15.37124	15.93934
14.16998	16.90576	15.74757	15.91045	15.54706	16.06499
14.26601	16.94217	15.77321	15.89782	15.52918	16.04619
14.37507	17.04269	15.81589	15.89286	15.35347	15.96541
14.36294	17.01359	15.79898	15.90283	15.40402	15.91367
14.24844	16.91153	15.75647	15.91180	15.56129	15.92054
14.17470	16.94380	15.76639	15.90425	15.49564	16.02605
14.23250	17.04364	15.80960	15.89233	15.35062	16.08422
14.34629	17.00608	15.80465	15.89629	15.42768	15.99209
14.37707	16.91552	15.76162	15.90875	15.56918	15.90369
14.28555	16.94647	15.76179	15.90824	15.46534	15.90929
14.18952	17.04368	15.80566	15.89569	15.34972	16.00545
14.20930	17.00587	15.80697	15.89668	15.46068	16.06722
14.31543	16.91359	15.76726	15.90649	15.56068	16.02708
14.37538	16.95393	15.76397	15.90982	15.44105	15.92213
14.31685	17.04070	15.80012	15.90212	15.35397	15.88313
14.21338	17.00269	15.80780	15.89555	15.49353	15.98218
14.19463	16.91779	15.77407	15.90058	15.54641	16.07019
14.28401	16.95942	15.76488	15.90967	15.41356	16.04284
14.36667	17.03640	15.79454	15.90516	15.37493	15.95150
14.34055	16.99875	15.80635	15.89610	15.51045	15.88869
14.24122	16.92521	15.77827	15.89554	15.53228	15.94087
14.19326	16.95860	15.76460	15.90728	15.38972	16.05761
14.25394	17.03634	15.79269	15.91052	15.40063	16.06399
14.34657	16.99577	15.80543	15.90043	15.52479	15.97687
14.35675	16.92551	15.78002	15.89513	15.50882	15.89895
14.27252	16.96322	15.76602	15.90182	15.38381	15.92510
14.19879	17.03223	15.78838	15.91033	15.41718	16.02701
14.22878	16.99702	15.80517	15.90725	15.53692	16.07115

14.32321	16.92483	15.78494	15.89688	15.48280	16.00741
14.36315	16.96800	15.76649	15.89745	15.38215	15.91613
14.29933	17.02981	15.78507	15.90863	15.43684	15.90791
14.21479	16.99224	15.80497	15.91062	15.53707	15.99786
14.21386	16.92889	15.78948	15.90037	15.46448	16.06570
14.29588	16.96969	15.76929	15.89480	15.37823	16.03062
14.35914	17.03038	15.78149	15.90293	15.46458	15.94588
14.32615	16.98617	15.80185	15.91134	15.52811	15.90299
14.23648	16.93383	15.79295	15.90665	15.44650	15.96443
14.20376	16.97319	15.77245	15.89726	15.38518	16.04967
14.26883	17.02838	15.77685	15.89846	15.48150	16.05314
14.34657	16.98614	15.79834	15.90738	15.52314	15.97404
14.34282	16.93419	15.79492	15.91018	15.42704	15.91134
14.26401	16.97619	15.77449	15.90136	15.40078	15.94047
14.20625	17.02516	15.77836	15.89818	15.49030	16.02487
14.24257	16.98830	15.79714	15.90264	15.51589	16.06046
14.32553	16.93399	15.79462	15.90948	15.41138	16.00532
14.35249	16.97582	15.78018	15.90628	15.41178	15.92705
14.29002	17.02773	15.77937	15.89866	15.50848	15.92370
14.21897	16.98306	15.79000	15.89916	15.49333	16.00132
14.22529	16.93944	15.79556	15.90675	15.40673	16.05884
14.29958	16.97832	15.78418	15.90762	15.42584	16.03136
14.35154	17.02337	15.77602	15.90274	15.51601	15.95048
14.31563	16.98167	15.78763	15.89921	15.47603	15.91582
14.23646	16.94237	15.79653	15.90298	15.40275	15.97178
14.21654	16.98124	15.78339	15.90689	15.44704	16.04645
14.27644	17.01902	15.77667	15.90621	15.51083	16.04950
14.34010	16.98593	15.78895	15.90268	15.46499	15.97910
14.33194	16.94186	15.79612	15.90132	15.40003	15.92104
14.26152	16.98164	15.78458	15.90487	15.46370	15.94767
14.21579	17.02051	15.77951	15.90662	15.50799	16.02511
14.25353	16.98077	15.78909	15.90389	15.44999	16.05700
14.32680	16.94231	15.79313	15.90199	15.40888	16.00677
14.34096	16.98466	15.78791	15.90576	15.47299	15.93628
14.28327	17.02146	15.78278	15.90593	15.50669	15.93390
14.22674	16.97668	15.78526	15.90528	15.43237	16.00205
14.23801	16.94720	15.79410	15.90269	15.42163	16.05295
14.30402	16.98537	15.79166	15.90259	15.48204	16.02825
14.34353	17.01829	15.78115	15.90631	15.49333	15.95784
14.30544	16.98153	15.78550	15.90736	15.43009	15.92899
14.23926	16.94683	15.79411	15.90576	15.42535	15.97850
14.22800	16.98641	15.78949	15.90121	15.49364	16.04049
14.28326	17.01709	15.78183	15.90167	15.48079	16.04152
14.33535	16.98108	15.78528	15.90666	15.42739	15.98225
14.32112	16.94920	15.79074	15.90674	15.43449	15.93358
14.25991	16.98945	15.78927	15.90442	15.49494	15.95814
14.22425	17.01634	15.78605	15.90402	15.47715	16.02211
14.26216	16.97605	15.78337	15.90611	15.41749	16.04575
14.32395	16.95453	15.78900	15.90897	15.45022	16.00249
14.33211	16.98724	15.79248	15.90676	15.49562	15.94819
14.27904	17.01441	15.78791	15.90314	15.46497	15.94746
14.23050	16.97633	15.78473	15.90363	15.41764	16.00071
14.24550	16.95230	15.79019	15.90588	15.46213	16.04353
14.30653	16.98914	15.79198	15.90800	15.49599	16.02217
14.33638	17.01253	15.78882	15.90854	15.44810	15.96466
14.29939	16.98011	15.78750	15.90576	15.43254	15.94373
14.24269	16.95216	15.78790	15.90281	15.46532	15.98288

14.23703	16.99000	15.79009	15.90672	15.48855	16.03250
14.28698	17.01166	15.78795	15.90655	15.44560	16.03467
14.33028	16.97801	15.78537	15.90353	15.43109	15.98630
14.31564	16.95801	15.78837	15.90458	15.47687	15.94761
14.25984	16.99000	15.79161	15.90457	15.48185	15.96650
14.23169	17.00920	15.78826	15.90468	15.44412	16.01757
14.26851	16.97682	15.78651	15.90781	15.43021	16.03792
14.32227	16.96152	15.79054	15.90757	15.48309	16.00546
14.32729	16.99112	15.79159	15.90670	15.47997	15.95901
14.27802	17.00906	15.79124	15.90808	15.43202	15.95700
14.23497	16.97902	15.78876	15.90591	15.44695	16.00085
14.25279	16.95963	15.78736	15.90617	15.48079	16.03708
14.30826	16.99424	15.79235	15.90501	15.47260	16.02041
14.33182	17.00627	15.78762	15.90443	15.43026	15.97328
14.29626	16.97715	15.78493	15.90715	15.45478	15.95365
14.24407	16.96364	15.79046	15.90562	15.48349	15.98444
14.24075	16.99098	15.78656	15.90421	15.45996	16.02765
14.29039	17.00560	15.78598	15.90633	15.43848	16.02910
14.32992	16.97566	15.78767	15.90747	15.45500	15.98953
14.31059	16.96577	15.78571	15.90664	15.48545	15.95425
14.25717	16.98899	15.78604	15.90619	15.45478	15.95782
14.23784	17.00511	15.79002	15.90710	15.43744	15.99088
14.27318	16.97671	15.79157	15.90447	15.46371	16.05007
14.31877	16.96558	15.78835	15.90570	15.48067	16.02814
14.32166	16.99411	15.78693	15.90457	15.45507	15.95223
14.27485	16.99902	15.80196	15.90488	15.43368	15.92711
14.23862	16.97899	15.78943	15.90658	15.47296	15.93807
14.25922	16.96790	15.78396	15.90699	15.47826	16.06655
14.30877	16.99133	15.80338	15.90731	15.44634	16.13926
14.32376	17.00292	15.78078	15.90764	15.44170	16.00636
14.29004	16.97646	15.79499	15.90737	15.47313	15.88165
14.24813	16.96859	15.80120	15.90715	15.47646	15.91239
14.24952	16.99077	15.77189	15.90617	15.44109	16.08437
14.29416	17.00225	15.80049	15.90700	15.45086	16.17422
14.32497	16.97699	15.79594	15.90717	15.47394	16.04531
14.30295	16.96898	15.77324	15.90405	15.47212	15.85714
14.25871	16.99313	15.80164	15.90243	15.44291	15.82808
14.24667	16.99979	15.78638	15.90722	15.45004	16.02890
14.27979	16.97890	15.78156	15.90959	15.48104	16.18968
14.31753	16.96791	15.79996	15.90702	15.46423	16.10174
14.31442	16.99009	15.77850	15.90436	15.44379	15.88990
14.27412	16.99904	15.78920	15.90558	15.45438	15.80027
14.24578	16.98011	15.79614	15.90846	15.48190	15.95998
14.26746	16.96965	15.77889	15.90947	15.46045	16.17157
14.30759	16.99063	15.79284	15.90778	15.43946	16.14114
14.31835	17.00243	15.79075	15.90643	15.46554	15.92703
14.28754	16.97456	15.78371	15.90631	15.47500	15.79279
14.25201	16.97239	15.79762	15.90899	15.45811	15.90800
14.25740	16.99422	15.78831	15.90764	15.44244	16.13666
14.29535	16.99971	15.78736	15.90569	15.46806	16.20688
14.31848	16.97759	15.79376	15.90533	15.47476	16.01201
14.29889	16.96894	15.79069	15.90478	15.45090	15.79318
14.26092	16.99641	15.79110	15.90469	15.44963	15.84184
14.25185	16.99730	15.79240	15.90609	15.46617	16.07465
14.28360	16.97747	15.79159	15.90751	15.47546	16.19444
14.31498	16.97125	15.78959	15.90752	15.44873	16.06700
14.30886	16.99471	15.78861	15.90884	15.44798	15.85454

14.27070	16.99855	15.79256	15.90514	15.47158	15.81498
14.25031	16.97428	15.79101	15.90621	15.47164	16.01049
14.27420	16.97488	15.78949	15.90906	15.44775	16.18058
14.30912	16.99473	15.79064	15.90860	15.44762	16.11002
14.31270	16.99825	15.78936	15.90783	15.47832	15.90720
14.28130	16.97594	15.79229	15.90673	15.46382	15.82206
14.25359	16.97542	15.78945	15.90512	15.44507	15.95013
14.26542	16.99394	15.78999	15.90677	15.45831	16.13699
14.30096	16.99705	15.79291	15.91138	15.47213	16.14113
14.31599	16.98199	15.79130	15.90852	15.46242	15.96215
14.29290	16.97301	15.79129	15.90435	15.44376	15.83471
14.25940	16.99264	15.79027	15.90500	15.46374	15.90760
14.25823	16.99661	15.79161	15.90932	15.47131	16.08935
14.28977	16.97938	15.79708	15.91159	15.46002	16.15648
14.31518	16.97638	15.78906	15.90847	15.44854	16.02717
14.30282	16.98977	15.78655	15.90304	15.46161	15.85984
14.26820	16.99799	15.79456	15.90550	15.47527	15.86675
14.25417	16.97655	15.79140	15.90856	15.45340	16.03605
14.27752	16.97699	15.78828	15.91173	15.45234	16.15432
14.30804	16.99334	15.79122	15.90685	15.46550	16.07690
14.31012	16.99187	15.79051	15.90400	15.47285	15.90489
14.28256	16.98218	15.79143	15.91176	15.45232	15.84814
14.25806	16.97787	15.79243	15.91442	15.45119	15.97757
14.26771	16.99167	15.78966	15.90704	15.47397	16.13277
14.29912	16.98955	15.79204	15.90442	15.46339	16.11626
14.31232	16.98353	15.79472	15.90857	15.45371	15.95404
14.29185	16.98208	15.79436	15.91244	15.45369	15.84878
14.26416	16.98804	15.79065	15.91054	15.47102	15.92960
14.26086	16.99102	15.79221	15.90486	15.46576	16.09366
14.28615	16.98213	15.79579	15.90402	15.45003	16.13891
14.30934	16.98283	15.79252	15.91063	15.45920	16.00828
14.30005	16.99025	15.79123	15.91459	15.46540	15.86850
14.27206	16.99170	15.79513	15.90562	15.46873	15.89005
14.26060	16.97994	15.79135	15.90282	15.44871	16.04745
14.27822	16.98104	15.79138	15.90911	15.45621	16.13999
14.30315	16.99436	15.79603	15.91346	15.47229	16.05741
14.30628	16.98833	15.79188	15.91122	15.46037	15.90428
14.28255	16.98398	15.79252	15.90508	15.45077	15.86897
14.26128	16.98276	15.79394	15.90332	15.45712	15.99484
14.27026	16.99030	15.79434	15.91417	15.47523	16.12160
14.29559	16.99086	15.79430	15.91496	15.45593	16.09380
14.30715	16.98215	15.79572	15.90469	15.45118	15.95008
14.29174	16.98539	15.79504	15.90145	15.46583	15.86764
14.26688	16.98786	15.79223	15.90976	15.46712	15.94850
14.26510	16.99428	15.79507	15.91454	15.46184	16.09117
14.28664	16.98231	15.79925	15.91121	15.44929	16.11465
14.30510	16.98117	15.79423	15.90577	15.46687	15.99645
14.30000	16.99467	15.79309	15.90289	15.46818	15.88426
14.27515	16.98986	15.79566	15.91135	15.45662	15.91362
14.26337	16.98319	15.79418	15.91820	15.45464	16.04928
14.27795	16.98260	15.79588	15.90910	15.46590	16.12130
14.30070	16.99271	15.79230	15.89991	15.47019	16.04178
14.30374	16.98895	15.79149	15.90485	15.45064	15.91192
14.28393	16.98375	15.79685	15.91416	15.45796	15.89226
14.26552	16.98203	15.79545	15.91484	15.46799	16.00302
14.27163	16.99161	15.79505	15.90644	15.46679	16.10688
14.29549	16.99343	15.79795	15.90159	15.45268	16.07680

14.30617	16.97577	15.80032	15.90804	15.45554	15.95306
14.28972	16.98383	15.79605	15.91374	15.47299	15.88644
14.26872	16.99598	15.79340	15.91075	15.45916	15.96031
14.26757	16.99050	15.79789	15.90518	15.45488	16.08076
14.28791	16.98239	15.79937	15.90505	15.45780	16.09942
14.30491	16.98384	15.79456	15.91268	15.47109	15.99622
14.29778	16.99140	15.79666	15.91505	15.46187	15.89909
14.27431	16.98869	15.79777	15.90906	15.44920	15.92553
14.26480	16.98611	15.79883	15.90506	15.46472	16.04223
14.28218	16.98252	15.79738	15.91020	15.46571	16.10691
14.30213	16.98704	15.79622	15.91318	15.46100	16.03857
14.30105	16.99254	15.79832	15.91003	15.45018	15.92473
14.28200	16.98175	15.79787	15.90647	15.46493	15.90616
14.26648	16.98598	15.79511	15.90811	15.47050	16.00182
14.27518	16.98962	15.79747	15.91109	15.45358	16.09363
14.29680	16.98845	15.79841	15.91236	15.45552	16.06967
14.30490	16.98251	15.79619	15.90625	15.46407	15.96217
14.28848	16.98743	15.79612	15.90419	15.46829	15.90384
14.26885	16.99202	15.79746	15.91189	15.45173	15.96514
14.27187	16.98627	15.79689	15.91572	15.45903	16.06848
14.29080	16.98627	15.79687	15.90854	15.46736	16.08545
14.30398	16.98270	15.79522	15.90105	15.46217	15.99824
14.29638	16.99400	15.79463	15.90688	15.45561	15.91589
14.27353	16.99074	15.79555	15.91412	15.45494	15.93811
14.26752	16.98030	15.79759	15.91623	15.47228	16.03720
14.28467	16.98727	15.79544	15.90719	15.46011	16.08994
14.30201	16.99180	15.79345	15.90228	15.45360	16.03286
14.29869	16.98988	15.79604	15.90721	15.46211	15.93844
14.27961	16.98160	15.79620	15.91872	15.46629	15.92349
14.26825	16.98807	15.79403	15.91410	15.46366	16.00253
14.28033	16.99199	15.79603	15.90246	15.45233	16.07735
14.29862	16.98771	15.79471	15.90293	15.46611	16.05904
14.30163	16.98902	15.79411	15.91217	15.46713	15.96911
14.28443	16.98521	15.79547	15.91372	15.46098	15.91873
14.27118	16.99307	15.79620	15.90959	15.45532	15.97136
14.27570	16.98999	15.79364	15.90370	15.46367	16.05987
14.29272	16.98602	15.79594	15.90711	15.47222	16.07393
14.30136	16.98910	15.79467	15.91429	15.45467	16.00112
14.29059	16.99408	15.79559	15.91226	15.45844	15.92783
14.27431	16.98700	15.80255	15.90375	15.46506	15.94583
14.27242	16.98170	15.80152	15.90506	15.46863	16.03040
14.28844	16.99487	15.78811	15.91364	15.45849	16.07730
14.30093	16.99136	15.79045	15.91474	15.45452	16.02939
14.29439	16.98595	15.79609	15.90870	15.46822	15.94594
14.27903	16.98591	15.79522	15.90466	15.46368	15.92999
14.27338	16.98783	15.79283	15.90884	15.46223	16.00081
14.28212	16.99608	15.79030	15.91088	15.45613	16.06908
14.29675	16.98798	15.79246	15.91121	15.46733	16.05364
14.29889	16.98517	15.79738	15.90599	15.46298	15.97520
14.28342	16.98731	15.79338	15.90473	15.45639	15.93057
14.27240	16.99248	15.78982	15.91167	15.46431	15.96483
14.27968	16.98911	15.79453	15.91562	15.46238	16.04420
14.29341	16.98397	15.79501	15.90811	15.46618	16.08077
14.29806	16.98866	15.79406	15.90507	15.45736	16.01578
14.28803	16.99074	15.79259	15.90759	15.46128	15.93571
14.27510	16.99143	15.79519	15.91012	15.46598	15.94176
14.27798	16.98348	15.79672	15.91013	15.46252	16.01117

14.28976	16.98692	15.79316	15.90716	15.46179	16.07021
14.29741	16.99661	15.79273	15.90599	15.45609	16.04652
14.29193	16.98802	15.79475	15.91061	15.47049	15.96558
14.27804	16.98508	15.79425	15.91283	15.46079	15.92546
14.27529	16.98904	15.79247	15.91078	15.45639	15.98393
14.28810	16.99608	15.79466	15.90897	15.46585	16.06264
14.29743	16.98661	15.79223	15.90916	15.46380	16.06134
14.29401	16.98683	15.79219	15.91309	15.46526	15.98962
14.28292	16.99025	15.79698	15.91112	15.45414	15.93298
14.27502	16.99223	15.79558	15.90975	15.46694	15.95532
14.28365	16.99289	15.79290	15.91176	15.46580	16.03781
14.29581	16.98332	15.79494	15.91066	15.45955	16.07512
14.29708	16.98920	15.79424	15.91031	15.46090	16.01849
14.28697	16.99410	15.79475	15.90997	15.46071	15.94416
14.27742	16.99169	15.79657	15.91075	15.46988	15.93993
14.27945	16.98623	15.79282	15.91034	15.45769	16.01193
14.29177	16.98653	15.79340	15.90986	15.45983	16.06799
14.29617	16.99438	15.79622	15.90991	15.46453	16.04387
14.29025	16.99087	15.79401	15.91108	15.46449	15.95945
14.28000	16.98999	15.79377	15.91058	15.46292	15.92517
14.27803	16.98765	15.79366	15.91080	15.45768	15.99605
14.28592	16.98917	15.79394	15.91007	15.46544	16.06823
14.29624	16.99617	15.79550	15.91004	15.46259	16.06006
14.29436	16.98767	15.79599	15.90969	15.46214	15.98765
14.28243	16.98685	15.79197	15.90982	15.45915	15.93402
14.27839	16.99264	15.79194	15.90985	15.46571	15.96544
14.28235	16.99766	15.79603	15.91056	15.46659	16.04619
14.29157	16.98728	15.79622	15.91137	15.45544	16.07229
14.29721	16.98553	15.79319	15.91122	15.46218	16.01291
14.28991	16.99577	15.79338	15.91230	15.46477	15.94374
14.27833	16.99421	15.79551	15.91266	15.46783	15.94830
14.27833	16.99191	15.79890	15.91101	15.45458	16.01746
14.28818	16.98529	15.79358	15.90961	15.46202	16.06928
14.29611	16.99380	15.79132	15.91132	15.47134	16.03817
14.29303	16.99624	15.79808	15.91121	15.45841	15.96139
14.28191	16.98920	15.79436	15.91040	15.46053	15.93754
14.27737	16.98925	15.79170	15.90688	15.46155	15.99205
14.28435	16.99115	15.79639	15.90780	15.47076	16.05597
14.29485	16.99764	15.79381	15.91272	15.46140	16.05497
14.29476	16.98680	15.79240	15.91383	15.45576	15.98942
14.28500	16.98706	15.79759	15.91210	15.46357	15.93819
14.27894	16.99279	15.79320	15.90922	15.46847	15.96681
14.28281	16.99263	15.79175	15.90881	15.46303	16.03832
14.29056	16.98960	15.79821	15.91481	15.45293	16.06378
14.29639	16.98526	15.79591	15.91660	15.46796	16.01290
14.29160	16.99350	15.79317	15.91123	15.46692	15.95163
14.27979	16.99337	15.79312	15.90645	15.45960	15.95213
14.27953	16.98839	15.78982	15.90971	15.45864	16.01482
14.28852	16.98758	15.79563	15.91327	15.46444	16.06417
14.29482	16.99080	15.80197	15.91402	15.46862	16.03809
14.29407	16.99293	15.79330	15.91019	15.45606	15.97170
14.28562	16.98692	15.79016	15.90813	15.46211	15.94685
14.27965	16.99205	15.79650	15.91097	15.46630	15.99158
14.28285	16.99106	15.79794	15.91598	15.46402	16.04901
14.29314	16.98982	15.79236	15.91621	15.45985	16.05324
14.29729	16.98921	15.79428	15.91118	15.46145	15.99800
14.28786	16.98826	15.79453	15.90913	15.47073	15.94896

14.28003	16.99319	15.79523	15.91159	15.45884	15.96834
14.28053	16.98841	15.80006	15.91415	15.46157	16.03047
14.28871	16.99086	15.79316	15.91455	15.46419	16.05764
14.29729	16.99090	15.79312	15.91107	15.46633	16.01968
14.29269	16.99062	15.80169	15.90825	15.46314	15.96395
14.28138	16.98948	15.79403	15.90943	15.46103	15.95752
14.27726	16.99034	15.79198	15.91293	15.46539	16.00509
14.28497	16.99488	15.80232	15.91292	15.46041	16.05144
14.29648	16.99008	15.79436	15.91322	15.46704	16.03853
14.29646	16.99201	15.79304	15.91281	15.46309	15.98095
14.28621	16.98899	15.80082	15.91141	15.46292	15.95422
14.27623	16.99206	15.79597	15.91207	15.46415	15.98642
14.28080	16.99257	15.78820	15.91388	15.46289	16.03620
14.29471	16.98954	15.79611	15.91191	15.46748	16.04772
14.29903	16.99149	15.79973	15.90995	15.45870	16.00603
14.28990	16.98878	15.79457	15.91081	15.46627	15.96115
14.27814	16.99606	15.79473	15.91044	15.46621	15.97016
14.27997	16.98990	15.78799	15.91147	15.46059	16.02009
14.29223	16.98923	15.79791	15.91446	15.46516	16.04829
14.29894	16.99618	15.80068	15.91159	15.46368	16.02164
14.29254	16.99049	15.78950	15.91020	15.46454	15.97682
14.27939	16.99084	15.79700	15.91370	15.46085	15.96437
14.27780	16.99065	15.79866	15.91576	15.46845	16.00078
14.28849	16.99514	15.79890	15.91105	15.46390	16.04291
14.29726	16.99376	15.80117	15.90698	15.45996	16.03476
14.29540	16.98725	15.78933	15.91135	15.46443	15.98963
14.28490	16.98986	15.79849	15.91357	15.46665	15.96558
14.27828	16.99256	15.79471	15.91361	15.46334	15.98729
14.28429	16.99688	15.79632	15.91314	15.46037	16.02897
14.29550	16.99071	15.78967	15.90847	15.46897	16.04213
14.29775	16.98791	15.79521	15.90912	15.46087	16.00696
14.28665	16.99225	15.80404	15.91505	15.46268	15.96990
14.27828	16.99048	15.79095	15.91420	15.46799	15.97738
14.28179	16.98695	15.78463	15.90914	15.46052	16.01716
14.29252	16.98512	15.80134	15.91030	15.46667	16.04066
14.29906	16.99328	15.79955	15.91254	15.46221	16.02197
14.29255	16.98921	15.79202	15.91426	15.46303	15.98077
14.28029	16.98673	15.79095	15.91475	15.46299	15.97041
14.27909	16.98855	15.78611	15.91247	15.46693	16.00398
14.28890	16.99130	15.79943	15.90994	15.46493	16.03791
14.29749	16.99591	15.79637	15.91275	15.45866	16.03074
14.29317	16.99138	15.78597	15.91308	15.46798	15.99077
14.28251	16.99062	15.79950	15.91172	15.46654	15.96942
14.27917	16.98785	15.79663	15.91260	15.46271	15.98993
14.28494	16.99299	15.79349	15.91335	15.46473	16.02828
14.29569	16.99437	15.79587	15.91160	17.12689	16.03738
14.29510	16.99518	15.79466	15.91114	16.62506	16.00501
14.28539	16.99608	15.79992	15.91327	15.99898	15.97218
14.28013	16.98864	15.78946	15.91507	15.92935	15.98066
14.28384	16.98892	15.78960	15.91369	16.87637	16.01797
14.29236	16.99878	15.79641	15.90981	14.12509	16.03906
14.29937	17.00234	15.80425	15.91219	10.87815	16.01877
14.29297	16.98818	15.79369	15.91432	11.14237	15.98298
14.28053	16.98196	15.78839	15.91475	14.23402	15.97485
14.27826	16.99777	15.79030	15.91028	15.54615	16.00471
14.28996	16.99373	15.81025	15.90878	16.11937	16.03440
14.29908	16.99273	15.79777	15.91068	15.14148	16.02626

14.29643	16.98741	15.78052	15.91484	14.92647	15.99306
14.28635	16.98812	15.79520	15.91424	15.92595	15.97433
14.27929	16.99187	15.80647	15.91166	15.79917	15.99226
14.28423	16.98806	15.79836	15.91222	14.90442	16.02412
14.29554	16.99001	15.78654	15.91433	15.28535	16.03272
14.29912	16.98895	15.79458	15.91415	16.03697	16.00581
14.28843	16.99637	15.80431	15.91161	15.42354	15.97957
14.27985	16.98829	15.80066	15.90852	14.91664	15.98431
14.28239	16.98609	15.78781	15.91159	15.62597	16.01366
14.29217	16.99583	15.79309	15.91503	15.93675	16.03243
14.29798	16.99506	15.80047	15.91179	15.11741	16.01843
14.29426	16.99045	15.80275	15.91155	15.10342	15.98756
14.28312	16.98757	15.78696	15.91245	15.87347	15.97648
14.27851	16.99531	15.79231	15.91541	15.66945	16.00059
14.28680	16.99657	15.80304	15.91587	14.96937	16.02946
14.29583	16.99546	15.79978	15.91089	15.40200	16.02758
14.29640	16.99122	15.79400	15.90832	15.92695	15.99974
14.28899	16.98492	15.79215	15.91375	15.36569	15.97767
14.28088	16.99922	15.79729	15.91486	15.01634	15.98883
14.28158	16.99376	15.80204	15.91417	15.67608	16.02062
14.29225	16.98970	15.79840	15.91097	15.80388	16.03179
14.29912	16.99275	15.78934	15.90901	15.13354	16.01090
14.29187	16.99191	15.79825	15.91593	15.20784	15.98305
14.28125	16.99386	15.80092	15.91781	15.84183	15.98161
14.28042	16.99193	15.79711	15.91292	15.56695	16.00878
14.29032	16.99660	15.79281	15.91182	15.04677	16.03211
14.30004	16.98052	15.79757	15.91573	15.46597	16.02229
14.29617	16.97612	15.80180	15.91332	15.84394	15.99088
14.28474	16.99345	15.79627	15.91149	15.32272	15.97841
14.27805	16.99880	15.79221	15.91327	15.11352	15.99843
14.28491	16.99049	15.79617	15.91133	15.68352	16.02775
14.29795	16.97775	15.79975	15.91291	15.71156	16.03012
14.29868	16.99385	15.79836	15.91560	15.15359	16.00162
14.28912	17.00332	15.79280	15.91264	15.29221	15.97974
14.28048	16.99013	15.79374	15.91066	15.79528	15.98972
14.28283	16.97717	15.79946	15.91501	15.50274	16.01668
14.29234	16.99280	15.79917	15.91538	15.10850	16.03129
14.29880	17.01256	15.79469	15.91193	15.50968	16.01205
14.29408	16.98887	15.79347	15.91265	15.77213	15.98655
14.28255	16.97398	15.80026	15.91361	15.30174	15.98377
14.28056	16.99529	15.79766	15.91341	15.19522	16.00650
14.28981	17.00843	15.79276	15.91649	15.67563	16.02631
14.29653	16.99098	15.79428	15.91451	15.64006	16.02229
14.29720	16.97847	15.79794	15.91322	15.18148	15.99622
14.28666	16.99094	15.79835	15.91188	15.35925	15.98082
14.27867	16.99851	15.79661	15.91131	15.74354	15.99556
14.28455	16.99291	15.79188	15.91450	15.46010	16.02195
14.29463	16.97929	15.79607	15.91680	15.17076	16.02679
14.29807	16.99122	15.80284	15.91314	15.53456	16.00627
14.29078	17.00162	15.79512	15.91119	15.70337	15.98490
14.28114	16.98318	15.79219	15.91318	15.30398	15.98612
14.28069	16.98015	15.79829	15.91379	15.25919	16.01290
14.29058	16.99205	15.80028	15.91314	15.65844	16.02924
14.30028	17.00601	15.79316	15.91242	15.58249	16.01734
14.29585	16.98513	15.79469	15.91321	15.21882	15.99157
14.28410	16.97601	15.79843	15.91298	15.39962	15.98332
14.27956	16.99525	15.79629	15.91255	15.70043	16.00083

14.28714	17.00460	15.79612	15.91221	15.43139	16.02416
14.29847	16.99294	15.79605	15.91436	15.22310	16.02426
14.29972	16.97816	15.79460	15.91608	15.54371	16.00097
14.28987	16.99333	15.79828	15.91369	15.65128	15.98364
14.27878	17.00110	15.79782	15.91186	15.30796	15.99424
14.28113	16.99365	15.79336	15.91247	15.30813	16.01805
14.29454	16.98975	15.79783	15.91576	15.63931	16.02658
14.30149	16.99108	15.79853	15.91729	15.53707	16.01023
14.29359	16.99974	15.79422	15.91466	15.25008	15.98744
14.28175	16.99317	15.79555	15.90964	15.43380	15.98738
14.27803	16.98483	15.80185	15.91093	15.65666	16.01234
14.28713	16.99211	15.79714	15.91711	15.41199	16.03039
14.30016	17.00044	15.79243	15.91735	15.27091	16.01641
14.29996	16.99264	15.79745	15.91192	15.54813	15.99205
14.28640	16.98167	15.79807	15.90967	15.60333	15.98172
14.27711	16.99416	15.79811	15.91366	15.31978	16.00247
14.28334	16.99729	15.79716	15.91951	15.34718	16.02900
14.29627	16.99063	15.79408	15.91671	15.61666	16.02691
14.30133	16.98553	15.79591	15.91114	15.50734	15.99963
14.29316	16.99190	15.80141	15.91012	15.28193	15.98167
14.27892	16.99884	15.79589	15.91490	15.45390	15.99377
14.27914	16.99021	15.79421	15.91956	15.62129	16.01943
14.29377	16.98976	15.79895	15.91439	15.40646	16.02959
14.30129	16.99208	15.79842	15.90821	15.30498	16.00771
14.29421	16.99782	15.79598	15.91174	15.54588	15.98656
14.28162	16.99346	15.79841	15.91769	15.57162	15.99003
14.27977	16.98696	15.79858	15.91772	15.33047	16.01316
14.28950	16.99370	15.79616	15.91216	15.37800	16.02596
14.29927	16.99816	15.79769	15.90749	15.59856	16.01632
14.29722	16.99528	15.79594	15.91465	15.48614	15.99268
14.28401	16.98541	15.79587	15.92087	15.30357	15.98445
14.27974	16.99427	15.80085	15.91799	15.46680	16.00491
14.28844	17.00190	15.79585	15.90876	15.59397	16.02609
14.29734	16.99490	15.79161	15.90840	15.40012	16.02238
14.29702	16.99012	15.79888	15.91557	15.33328	16.00062
14.29119	16.99247	15.79880	15.91868	15.54244	15.98536
14.28441	17.00406	15.79449	15.91284	15.54370	15.99537
14.28457	16.99487	15.79689	15.90783	15.33945	16.01993
14.29153	16.98749	15.79649	15.91231	15.40149	16.02753
14.29684	16.99455	15.79656	15.92009	15.58055	16.00956
14.29230	17.00149	15.79829	15.91878	15.46719	15.98660
14.28835	16.99856	15.79729	15.91137	15.32866	15.98891
14.28566	16.98551	15.79519	15.90923	15.47806	16.01168
14.28666	16.99282	15.79797	15.91509	15.56861	16.02817
14.29385	17.00142	15.79975	15.92057	15.39847	16.01890
14.29581	16.99662	15.79758	15.91459	15.36050	15.99350
14.29043	16.98938	15.79736	15.90748	15.53599	15.98462
14.28574	16.99221	15.79871	15.91017	15.52136	16.00430
14.28632	17.00086	15.79552	15.91847	15.35661	16.02704
14.29061	16.99164	15.79688	15.91888	15.41900	16.02450
14.29467	16.98912	15.80144	15.91085	15.56212	15.99925
14.29382	16.99514	15.79649	15.90877	15.45844	15.98317
14.28800	17.00277	15.79605	15.91476	15.35002	15.99677
14.28415	16.99799	15.79731	15.91910	15.48568	16.02162
14.28981	16.98773	15.79671	15.91615	15.54860	16.02992
14.29411	16.99685	15.79765	15.90861	15.39884	16.01021
14.29548	16.99962	15.79821	15.91008	15.38177	15.98584

14.29045	16.99703	15.79646	15.91876	15.53308	15.98659
14.28433	16.98740	15.79374	15.91731	15.50025	16.01368
14.28713	16.99353	15.79744	15.91136	15.36902	16.03198
14.29466	16.99707	15.80098	15.90940	15.43565	16.01937
14.29810	16.99163	15.79732	15.91576	15.54326	15.99268
14.29069	16.99112	15.79316	15.91920	15.44669	15.98341
14.28348	16.99022	15.79548	15.91658	15.37240	16.00066
14.28539	16.99445	15.79929	15.90910	15.48585	16.02706
14.29329	16.99111	15.79891	15.91016	15.52517	16.02942
14.29680	16.98726	15.79426	15.91981	15.40420	16.00402
14.29364	16.99204	15.79430	15.91921	15.40053	15.98383
14.28453	16.99349	15.79795	15.90940	15.51719	15.99170
14.28287	16.99092	15.79780	15.90660	15.49016	16.01921
14.28931	16.98649	15.79421	15.91520	15.38308	16.03141
14.29650	16.99447	15.79740	15.92293	15.44086	16.01528
14.29391	16.99344	15.79818	15.91501	15.52522	15.98831
14.28660	16.98760	15.79710	15.90650	15.44919	15.98542
14.28334	16.99212	15.79585	15.91099	15.38471	16.00776
14.28780	16.99305	15.79652	15.92090	15.48161	16.02932
14.29610	16.99574	15.79963	15.92057	15.51585	16.02416
14.29587	16.99020	15.79782	15.91100	15.41136	15.99809
14.28903	16.99119	15.79602	15.90745	15.40691	15.98510
14.28503	16.99276	15.79735	15.91766	15.51259	16.00017
14.28751	16.99603	15.80141	15.92352	15.48203	16.02430
14.29298	16.99659	15.80006	15.91670	15.39196	16.02673
14.29624	16.98852	15.79620	15.90953	15.44697	16.00691
14.29248	16.99569	15.79602	15.91073	15.51825	15.98854
14.28604	16.99628	15.80369	15.91912	15.44316	15.99358
14.28473	16.99498	15.80069	15.92108	15.39718	16.01627
14.29274	16.99134	15.79587	15.91035	15.48114	16.03034
14.29560	16.99414	15.79542	15.90394	15.50568	16.01444
14.29178	16.99675	15.79907	15.91381	15.41478	15.99162
14.28804	16.99164	15.79937	15.92087	15.41617	15.98966
14.28689	16.99462	15.79720	15.91517	15.50543	16.00853
14.28991	16.99477	15.79411	15.90884	15.47496	16.02773
14.29434	16.99637	15.79968	15.91238	15.40035	16.02266
14.29488	16.99301	15.80093	15.92019	15.45205	15.99788
14.28916	16.99031	15.79487	15.92287	15.50775	15.98690
14.28584	16.99721	15.79399	15.91214	15.43999	16.00230
14.28795	16.99448	15.79900	15.90749	15.40797	16.02309
14.29338	16.99304	15.80315	15.91231	15.48184	16.02649
14.29432	16.98970	15.79388	15.91832	15.49248	16.00675
14.29140	16.99307	15.79259	15.91914	15.41999	15.98868
14.28529	16.99561	15.80125	15.91032	15.42713	15.99427
14.28613	16.99254	15.80256	15.90933	15.49876	16.01709
14.29209	16.99192	15.79700	15.91950	15.46927	16.02958
14.29617	16.98921	15.79635	15.92203	15.40789	16.01510
14.29231	16.99870	15.79660	15.91744	15.45754	15.99235
14.28602	16.99252	15.80256	15.91216	15.49856	15.98930
14.28676	16.99019	15.80122	15.91237	15.44059	16.00864
14.29114	16.99582	15.79386	15.91767	15.41706	16.02700
14.29499	16.99570	15.79734	15.91993	15.47883	16.02314
14.29566	16.99167	15.80284	15.91418	15.48358	16.00047
14.28838	16.99070	15.79916	15.90785	15.42526	15.98699
14.28379	16.99979	15.79321	15.91458	15.43504	16.00037
14.29006	16.99257	15.79633	15.92102	15.48794	16.02221
14.29425	16.99293	15.79992	15.91913	15.46585	16.02690

14.29479	16.99716	15.79871	15.91460	15.41705	16.00977
14.29249	16.99351	15.79500	15.91199	15.45498	15.98920
14.28710	16.99893	15.79401	15.91502	15.49347	15.99204
14.28495	16.99374	15.79724	15.91768	15.44229	16.01468
14.29061	16.99520	15.80424	15.91317	15.42063	16.02787
14.29583	16.99376	15.79919	15.91217	15.47657	16.01650
14.29408	16.99585	15.79383	15.91640	15.48260	15.99542
14.28913	16.99607	15.80250	15.91797	15.42375	15.98962
14.28636	16.98796	15.80320	15.91535	15.43919	16.00584
14.28748	16.99592	15.79597	15.91214	15.48840	16.02449
14.29308	16.99538	15.79775	15.91534	15.45836	16.02361
14.29618	16.99532	15.80220	15.92121	15.42324	16.00320
14.29151	16.98969	15.79929	15.91782	15.46066	15.99108
14.28612	16.99211	15.79769	15.91241	15.48562	15.99982
14.28618	16.99810	15.79914	15.91382	15.43903	16.01748
14.29130	16.99326	15.79799	15.91777	15.43136	16.02321
14.29562	16.99337	15.79998	15.91990	15.47671	16.01105
14.29344	16.99072	15.79901	15.91625	15.47205	15.99584
14.28647	16.99926	15.79891	15.91240	15.43042	15.99557
14.28467	16.99516	15.79495	15.91386	15.44402	16.01133
14.28991	16.98907	15.80027	15.92178	15.48003	16.02271
14.29628	16.99450	15.80177	15.91997	15.45878	16.01467
14.29660	16.99593	15.79531	15.90881	15.42939	16.00007
14.28917	16.99632	15.79461	15.91048	15.45745	15.99627
14.28440	16.98800	15.79836	15.92120	15.47917	16.00610
14.28718	16.99585	15.80245	15.92143	15.44675	16.01910
14.29627	16.99835	15.79864	15.91498	15.43122	16.01954
14.29906	16.98969	15.79400	15.91150	15.47233	16.00586
14.29252	16.99253	15.80045	15.91338	15.47268	15.99654
14.28381	16.99446	15.80417	15.92238	15.43180	16.00272
14.28470	17.00023	15.79758	15.91852	15.44440	16.01649
14.29246	16.98941	15.79731	15.91127	15.48172	16.01880
14.29935	16.98779	15.80260	15.91012	15.45695	16.00950
14.29590	16.99820	15.80180	15.91714	15.42835	15.99947
14.28610	16.99573	15.79654	15.92236	15.46089	15.99964
14.28279	16.99383	15.79762	15.91627	15.47851	16.01246
14.28975	16.98902	15.80237	15.90933	15.44474	16.02067
14.29799	16.99658	15.80142	15.91406	15.43511	16.01374
14.29728	16.99654	15.79757	15.91951	15.47244	16.00163
14.29002	16.99340	15.79709	15.91794	15.47039	15.99920
14.28298	16.99235	15.79993	15.91298	15.43246	16.00825
14.28384	16.99449	15.80408	15.91027	15.45115	16.01751
14.29452	16.99992	15.79860	15.91515	15.47533	16.01719
14.30078	16.99103	15.79393	15.92211	15.45423	16.00671
14.29240	16.99544	15.79912	15.91803	15.43612	15.99907
14.28410	16.99640	15.80179	15.91125	15.46175	16.00293
14.28358	16.99766	15.80024	15.91440	15.47355	16.01292
14.29137	16.99326	15.79487	15.92126	15.44316	16.01713
14.29957	16.99235	15.79730	15.91980	15.44241	16.01186
14.29840	17.00055	15.80256	15.91194	15.46903	16.00243
14.28687	16.99750	15.80047	15.91116	15.46523	16.00081
14.28104	16.99292	15.79751	15.91514	15.43848	16.01072
14.28842	16.99280	15.79995	15.92153	15.45134	16.01568
14.29743	17.00053	15.79929	15.91938	15.47380	16.01334
14.29965	16.99843	15.79986	15.91090	15.45440	16.00729
14.29256	16.99025	15.79928	15.91135	15.43594	16.00116
14.28345	16.99617	15.79841	15.91825	15.46056	16.00647

14.28480	16.99657	15.80099	15.92188	15.47348	16.01541
14.29339	16.99966	15.79932	15.91364	15.44484	16.01542
14.29931	16.99507	15.79676	15.90774	15.43952	16.00891
14.29535	16.98935	15.79822	15.91523	15.47128	16.00323
14.28555	16.99866	15.80029	15.92407	15.46390	16.00413
14.28290	17.00020	15.79780	15.91861	15.43838	16.01258
14.28883	16.99532	15.79970	15.91100	15.45208	16.01597
14.29787	16.98964	15.79941	15.91251	15.47282	16.01013
14.29914	16.99800	15.79642	15.91760	15.45466	16.00360
14.29013	16.99755	15.79729	15.91932	15.43626	16.00321
14.28743	16.99074	15.80134	15.91769	15.46409	16.00704
14.28931	16.99535	15.80003	15.91160	15.47061	16.01255
14.29397	16.99793	15.79687	15.91059	15.44481	16.01212
14.29439	16.99852	15.80008	15.92035	15.44203	16.00672
14.29024	16.98929	15.80118	15.91987	15.47125	16.00415
14.28788	16.99582	15.79657	15.91354	15.46236	16.00741
14.28994	16.99921	15.79701	15.91328	15.43930	16.01171
14.29433	16.99505	15.80190	15.91569	15.45419	16.01459
14.29380	16.99283	15.79950	15.91880	15.46907	16.01071
14.29009	16.99283	15.79815	15.91731	15.45339	16.00367
14.28827	16.99975	15.80040	15.91263	15.44213	16.00520
14.28925	16.99513	15.80012	15.91409	15.45981	16.01329
14.29228	16.99225	15.79817	15.91729	15.46657	16.01534
14.29441	16.99359	15.79794	15.91785	15.44680	16.01222
14.29136	16.99612	15.80106	15.91494	15.44740	16.00579
14.28830	16.99888	15.80055	15.91363	15.46387	16.00400
14.28978	16.99163	15.79623	15.91465	15.46055	16.00988
14.29296	16.99577	15.79806	15.91672	15.44608	16.01618
14.29387	16.99641	15.80330	15.91915	15.45228	16.01375
14.29104	16.99713	15.79806	15.91565	15.46464	16.00588
14.28867	16.99518	15.79615	15.91299	15.45629	16.00372
14.29002	16.99240	15.80207	15.91483	15.44508	16.00893
14.29276	16.99992	15.80221	15.91821	15.45739	16.01440
14.29305	16.99559	15.79693	15.91683	15.46668	16.01424
14.29135	16.99684	15.79960	15.91377	15.44836	16.00679
14.28883	16.99209	15.80145	15.91513	15.44635	16.00056
14.28945	16.99582	15.80074	15.91721	15.46601	16.00596
14.29309	16.99649	15.80194	15.91835	15.45891	16.01385
14.29322	16.99441	15.80124	15.91718	15.44688	16.01425
14.29093	16.99757	15.79463	15.91057	15.45196	16.00801
14.28945	16.99407	15.79698	15.91342	15.46769	16.00304
14.28798	16.99668	15.80348	15.91951	15.45251	16.00420
14.29229	16.99507	15.79737	15.91840	15.44583	16.01139
14.29517	16.99899	15.79746	15.91550	15.45825	16.01797
14.29236	16.99582	15.80220	15.91409	15.46447	16.01045
14.28982	16.99311	15.79556	15.91604	15.45067	16.00220
14.28870	16.99851	15.79590	15.91781	15.44461	16.00329
14.29082	16.99575	15.80319	15.91729	15.46272	16.00934
14.29587	16.99648	15.80147	15.91498	15.46449	16.01241
14.29617	16.99664	15.79672	15.91154	15.44349	16.01339
14.29091	16.99517	15.79863	15.91633	15.44901	16.00834
14.28690	16.99601	15.79930	15.92180	15.46908	16.00292
14.28952	16.99672	15.79906	15.91711	15.45723	16.00685
14.29448	16.99862	15.80141	15.91403	15.44094	16.01338
14.29687	16.99038	15.79996	15.91659	15.45810	16.01372
14.29484	16.99763	15.79856	15.91805	15.46957	16.01049
14.29012	16.99622	15.79972	15.91914	15.44842	16.00545

14.28670	16.99476	15.80214	15.91527	15.44466	16.00374
14.29113	16.99860	15.79935	15.91457	15.46586	16.01068
14.29473	16.99130	15.80045	15.91756	15.46447	16.01437
14.29583	16.99685	15.80007	15.91880	15.44007	16.01010
14.29234	16.99422	15.79864	15.91808	15.45590	16.00523
14.28698	16.99628	15.79984	15.91224	15.46819	16.00492
14.28870	16.99424	15.79886	15.91499	15.45302	16.00832
14.29192	16.99572	15.79972	15.91820	15.44459	16.01340
14.29614	16.99531	15.80159	15.91920	15.46113	16.01158
14.29489	16.99316	15.79832	15.91718	15.46527	16.00545
14.28802	16.99635	15.79653	15.91410	15.44764	16.00606
14.28764	16.99640	15.80097	15.91354	15.44848	16.00970
14.29290	16.99546	15.80331	15.91709	15.46483	16.01175
14.29667	16.99483	15.79849	15.91893	15.46157	16.01351
14.29587	16.99630	15.79903	15.91492	15.44481	16.00879
14.29065	16.99859	15.80154	15.91329	15.45347	16.00454
14.28767	16.99221	15.80263	15.91655	15.46872	16.00816
14.28921	16.99678	15.79783	15.91890	15.45194	16.01299
14.29452	16.99811	15.79945	15.91948	15.44533	16.01280
14.29530	16.99529	15.80302	15.91569	15.46206	16.01083
14.29068	16.99573	15.80076	15.91245	15.46330	16.00713
14.29015	16.99593	15.79725	15.91801	15.44819	16.00765
14.29035	16.99663	15.79866	15.91808	15.44922	16.01102
14.29320	16.99277	15.80195	15.91510	15.46349	16.01306
14.29506	16.99850	15.80048	15.91388	15.45982	16.01172
14.29166	16.99504	15.79695	15.91657	15.44455	16.00780
14.28736	16.99509	15.80015	15.91891	15.45484	16.00805
14.28984	16.99531	15.80055	15.91912	15.46781	16.01005
14.29466	16.99522	15.80120	15.91355	15.45162	16.01059
14.29666	16.99857	15.80344	15.91100	15.44334	16.00987
14.29373	16.99524	15.79794	15.91871	15.46669	16.00811
14.28841	16.99461	15.79900	15.92211	15.46056	16.00832
14.28661	16.99433	15.80103	15.91570	15.44540	16.01034
14.29303	17.00001	15.80269	15.91073	15.45326	16.01127
14.29873	16.99648	15.79984	15.91448	15.46566	16.01019
14.29542	16.99168	15.79870	15.92231	15.45619	16.00828
14.28981	16.99987	15.80221	15.92025	15.44740	16.01036
14.28604	16.99663	15.80192	15.91116	15.45846	16.01239
14.28952	16.99560	15.79753	15.91102	15.46369	16.01123
14.29456	16.99342	15.80117	15.91754	15.45458	16.01073
14.29648	16.99842	15.80041	15.92213	15.44835	16.01083
14.29233	17.00034	15.79740	15.91966	15.46061	16.01192
14.28688	16.99089	15.80153	15.91191	15.46223	16.01255
14.28785	16.99561	15.79799	15.91135	15.44985	16.01112
14.29410	16.99696	15.79881	15.91987	15.45092	16.01058
14.29670	16.99835	15.80199	15.92243	15.46434	16.01045
14.29414	16.99315	15.79905	15.91567	15.45872	16.01186
14.28926	16.99490	15.79619	15.91090	15.44581	16.01377
14.28709	17.00051	15.80178	15.91411	15.45575	16.01125
14.29265	16.99437	15.80327	15.92208	15.46483	16.00939
14.29557	16.99576	15.79936	15.92397	15.45306	16.01121
14.29443	16.99645	15.79985	15.91604	15.44819	16.01319
14.29115	16.99975	15.80309	15.90771	15.46008	16.01214
14.28865	16.99392	15.80104	15.91479	15.46292	16.01191
14.29125	16.99452	15.80106	15.92547	15.44949	16.00999
14.29650	16.99903	15.80109	15.92060	15.45063	16.01046
14.29567	16.99593	15.79755	15.91056	15.46347	16.01221

14.29087	16.99847	15.80097	15.91084	15.45610	16.01285
14.28841	16.99512	15.80310	15.91909	15.45075	16.01097
14.28998	16.99451	15.79651	15.92115	15.45562	16.00898
14.29393	16.99693	15.79911	15.91614	15.46328	16.00953
14.29566	16.99722	15.80233	15.90902	15.45402	16.01092
14.29306	16.99738	15.80036	15.91395	15.44922	16.01271
14.28927	16.99194	15.80094	15.92361	15.46023	16.01318
14.28916	16.99895	15.80025	15.92188	15.45979	16.00983
14.29265	16.99740	15.79959	15.91143	15.44791	16.00848
14.29519	16.99512	15.80343	15.91025	15.45435	16.01174
14.29330	16.99701	15.79918	15.91737	15.46434	16.01241
14.29175	16.99683	15.79987	15.92260	15.45342	16.01328
14.29035	16.99753	15.80140	15.91815	15.44938	16.01242
14.29021	16.99479	15.79990	15.91407	15.45932	16.00911
14.29387	16.99886	15.80079	15.91581	15.45823	16.00958
14.29386	16.99404	15.80263	15.92158	15.45308	16.01333
14.29046	16.99768	15.80202	15.92256	15.45473	16.01356
14.29237	16.99931	15.80035	15.91738	15.45664	16.01147
14.29395	16.99243	15.79945	15.91184	15.45646	16.01131
14.29034	16.99491	15.80108	15.91620	15.45569	16.00979
14.29140	16.99744	15.80380	15.91985	15.45546	16.01092
14.29469	16.99810	15.80201	15.91709	15.45479	16.01353
14.29253	16.99311	15.79826	15.91357	15.45851	16.01207
14.29214	16.99433	15.80105	15.91444	15.45263	16.00937
14.29295	16.99755	15.80103	15.91879	15.45499	16.01058
14.29131	16.99648	15.80086	15.92103	15.46059	16.01236
14.29249	16.99498	15.80212	15.91925	15.45720	16.01388
14.29482	16.99429	15.80002	15.91385	15.44992	16.01305
14.29240	16.99728	15.80099	15.91706	15.45530	16.01029
14.29009	16.99734	15.80232	15.92375	15.46297	16.00723
14.29100	16.99431	15.80038	15.92091	15.45260	16.01085
14.29351	16.99696	15.79792	15.91095	15.45045	16.01508
14.29470	16.99827	15.80259	15.91142	15.46240	16.01491
14.29275	16.99827	15.80220	15.91851	15.45785	16.00951
14.28949	16.99224	15.79978	15.92420	15.44959	16.00696
14.28993	16.99823	15.79910	15.91843	15.45450	16.00941
14.29346	16.99912	15.79954	15.91413	15.46225	16.01334
14.29523	16.99583	15.80008	15.91595	15.45144	16.01578
14.29333	16.99427	15.80087	15.92188	15.45226	16.00961
14.29153	16.99576	15.79893	15.92342	15.45833	16.00551
14.28992	16.99847	15.79906	15.91457	15.45600	16.00840
14.29198	16.99418	15.80255	15.91104	15.45382	16.01419
14.29468	16.99581	15.80373	15.91748	15.45216	16.01552
14.29200	16.99336	15.79940	15.92343	15.45922	16.01210
14.29104	16.99757	15.79943	15.91969	15.45637	16.00538
14.29226	16.99886	15.80258	15.91259	15.45101	16.00508
14.29291	16.99272	15.80377	15.91303	15.45402	16.01360
14.29489	16.99284	15.80305	15.92201	15.46130	16.01812
14.29522	16.99638	15.79774	15.92309	15.45674	16.01296
14.29182	17.00054	15.79933	15.91642	15.44777	16.00596
14.29048	16.99124	15.80578	15.91094	15.46094	16.00511
14.29191	16.99229	15.80305	15.91545	15.45884	16.01111
14.29505	17.00135	15.79835	15.92299	15.45189	16.01897
14.29610	16.99785	15.80109	15.92132	15.45548	16.01651
14.29366	16.99551	15.80336	15.91037	15.46252	16.00904
14.29026	16.99264	15.80192	15.90851	15.45399	16.00501
14.28974	16.99919	15.80119	15.91834	15.45293	16.00887

14.29213	17.00014	15.79897	15.92459	15.45869	16.01658
14.29575	16.99356	15.80298	15.91960	15.45845	16.01881
14.29727	16.99412	15.80622	15.91187	15.45487	16.01209
14.29189	16.99799	15.79799	15.91246	15.45510	16.00440
14.28846	17.00385	15.79532	15.92222	15.45760	16.00584
14.28999	16.99495	15.80444	15.92479	15.45842	16.01355
14.29583	16.99302	15.80305	15.91600	15.45459	16.01837
14.29912	16.99920	15.79763	15.90924	15.45388	16.01569
14.29442	17.00273	15.79875	15.91264	15.45742	16.00926
14.28743	16.99503	15.80209	15.92338	15.46026	16.00779
14.28836	16.99098	15.80308	15.92460	15.45239	16.01091
14.29397	17.00355	15.80089	15.91350	15.45500	16.01742
14.30003	16.99806	15.79792	15.91056	15.46396	16.01921
14.29685	16.99419	15.79985	15.91838	15.45279	16.01078
14.28817	16.99450	15.80385	15.92557	15.45253	16.00611
14.28524	16.99640	15.80295	15.92138	15.46231	16.00792
14.29112	16.99864	15.79799	15.91347	15.45729	16.01414
14.29923	16.99453	15.79634	15.91168	15.44882	16.01849
14.29936	16.99819	15.80075	15.91873	15.45987	16.01556
14.29246	16.99326	15.80098	15.92262	15.46032	16.00667
14.28638	16.99647	15.79719	15.91580	15.45102	16.00631
14.28822	16.99819	15.79921	15.91251	15.45658	16.01336
14.29708	16.99283	15.80356	15.91692	15.46045	16.01884
14.30022	16.99692	15.79847	15.92056	15.45644	16.01600
14.29577	16.99456	15.79847	15.91755	15.45159	16.00931
14.28794	16.99677	15.80025	15.91358	15.46157	16.00433
14.28450	16.99426	15.79711	15.91354	15.46010	16.00897
14.29222	16.99746	15.80304	15.91911	15.45148	16.01982
14.30120	16.99974	15.80262	15.92125	15.45725	16.01929
14.30013	16.99373	15.79614	15.91561	15.46188	16.00928
14.29132	16.99485	15.80069	15.91144	15.45509	16.00461
14.28486	16.99986	15.80407	15.91661	15.45549	16.00742
14.28746	17.00208	15.79945	15.92315	15.45806	16.01528
14.29628	16.98749	15.79950	15.92200	15.45684	16.02067
14.30191	16.99593	15.80310	15.91631	15.45649	16.01385
14.29620	17.00382	15.80088	15.91538	15.45726	16.00454
14.28531	16.99209	15.79674	15.91770	15.45680	16.00559
14.28511	16.99311	15.80087	15.92150	15.45675	16.01272
14.29379	16.99627	15.80509	15.92080	15.45642	16.01818
14.30037	17.00101	15.80034	15.91515	15.45594	16.01442
14.29901	16.99602	15.79561	15.91395	15.45818	16.00756
14.28874	16.99624	15.79814	15.91944	15.45728	16.00407
14.28239	16.99464	15.80274	15.91976	15.45665	16.00982
14.28974	16.99474	15.80041	15.91437	15.45464	16.01613
14.30068	17.00432	15.79769	15.91500	15.46038	16.01520
14.30064	16.99191	15.80006	15.91682	15.45618	16.01004
14.29242	16.99268	15.80297	15.92015	15.45279	16.00686
14.28400	17.00331	15.80010	15.92083	15.46027	16.00819
14.28591	16.99662	15.80175	15.91637	15.45787	16.01429
14.29793	16.99193	15.80126	15.91319	15.45366	16.01741
14.30311	16.99713	15.79892	15.91690	15.45560	16.01054
14.29517	16.99797	15.80131	15.91994	15.46145	16.00759
14.28610	16.99449	15.80017	15.91863	15.45447	16.00763
14.28506	16.99972	15.79910	15.91470	15.45215	16.01107
14.29355	16.99568	15.79879	15.91696	15.46113	16.01580
14.30282	16.99730	15.80032	15.91753	15.45831	16.01494
14.29913	16.99747	15.80292	15.91836	15.45351	16.00857

14.28697	16.99208	15.80085	15.91663	15.45544	16.00719
14.28512	16.99684	15.79676	15.91342	15.46123	16.01081
14.29290	16.99857	15.80006	15.91419	15.45591	16.01400
14.29995	16.99694	15.80397	15.91894	15.45395	16.01717
14.30033	16.99055	15.80142	15.92001	15.45976	16.00667
14.29154	16.99989	15.79727	15.91713	15.45740	15.99716
14.28450	17.00144	15.80043	15.91585	15.45519	16.00702
14.28830	16.99507	15.80602	15.91691	15.45389	16.01528
14.29783	16.99705	15.80069	15.91786	15.46006	16.01650
14.30100	16.99193	15.79609	15.91859	15.45845	16.02193
14.29378	17.00036	15.80079	15.91839	15.45309	16.01552
14.28550	17.00026	15.80339	15.91372	15.45581	16.01061
14.28545	16.99034	15.80104	15.91359	15.45980	16.00711
14.29503	16.99606	15.80090	15.91687	15.45686	16.00663
14.30288	17.00210	15.79999	15.92002	15.45358	16.00284
14.29959	16.99716	15.80149	15.92118	15.45902	16.01660
14.28813	16.98858	15.80335	15.91896	15.45829	16.02250
14.28405	16.99683	15.79954	15.91495	15.45535	16.01236
14.29027	17.00245	15.79931	15.91822	15.45625	16.00517
14.30087	16.99581	15.80672	15.91918	15.45824	16.00173
14.30271	16.99142	15.80336	15.91765	15.46440	16.00510
14.29340	16.99349	15.79825	15.91606	15.45526	16.01637
14.28234	17.00331	15.80100	15.91627	15.45615	16.02019
14.28348	16.99580	15.80262	15.91870	15.45650	16.01001
14.29723	16.99037	15.80289	15.91993	15.46224	16.00517
14.30449	16.99454	15.80326	15.91944	15.45606	16.01196
14.29816	17.00114	15.79878	15.91569	15.45330	16.01913
14.28540	16.99707	15.79909	15.91539	15.46155	16.02392
14.28053	16.98781	15.80786	15.91926	15.45800	16.01745
14.29063	16.99540	15.80149	15.92068	15.45366	16.00334
14.30423	17.00439	15.79449	15.91670	15.45650	16.00421
14.30286	17.00844	15.80069	15.91504	15.46091	16.01681
14.29087	16.99092	15.80261	15.91937	15.45378	16.02320
14.28116	16.98813	15.80094	15.91966	15.45551	16.01845
14.28521	17.01322	15.80050	15.91934	15.45877	16.00748
14.29856	17.01424	15.79859	15.91579	15.45913	16.00319
14.30461	16.98526	15.80493	15.91387	15.45419	16.01131
14.29726	16.98145	15.80767	15.91825	15.45633	16.02242
14.28515	17.00636	15.80000	15.92233	15.45711	16.02122
14.28295	17.01007	15.79793	15.91693	15.45901	16.01097
14.29313	16.99258	15.80564	15.91364	15.45485	16.00227
14.30351	16.98199	15.80648	15.91564	15.45729	16.00470
14.30143	16.99751	15.79562	15.92202	15.45542	16.01860
14.28950	17.01869	15.79612	15.92441	15.45894	16.02473
14.28404	16.99108	15.80332	15.91893	15.45570	16.01589
14.29139	16.97915	15.80331	15.91383	15.45644	16.00539
14.30153	17.00735	15.79893	15.91696	15.45933	16.00414
14.30352	17.01520	15.79750	15.91989	15.45410	16.01324
14.29477	16.99209	15.80211	15.91916	15.45404	16.02411
14.28469	16.98284	15.80335	15.91498	15.45776	16.02056
14.28638	17.00887	15.79909	15.91437	15.46212	16.00740
14.29677	17.01316	15.80100	15.91965	15.45189	16.00213
14.30367	16.99141	15.80351	15.92158	15.45334	16.01019
14.29912	16.98729	15.80091	15.91570	15.46174	16.02189
14.28775	17.00360	15.79947	15.91436	15.45860	16.02383
14.28393	17.01349	15.80223	15.91947	15.45140	16.01401
14.29145	16.99226	15.80467	15.92711	15.45794	16.00277

14.30123	16.98305	15.80256	15.92444	15.45860	16.00558
14.30185	17.00344	15.80027	15.91024	15.45662	16.01699
14.29163	17.01354	15.79999	15.90879	15.45539	16.02413
14.28361	16.99159	15.80334	15.93093	15.45854	16.01817
14.28795	16.98706	15.80525	15.93469	15.45722	16.00370
14.29938	17.00889	15.80372	15.92036	15.45608	16.00200
14.30165	17.01089	15.79849	15.92724	15.45578	16.01329
14.29495	16.99117	15.80169	15.90298	15.45926	16.02284
14.28751	16.98423	15.80602	15.90653	15.45929	16.02083
14.28577	17.00275	15.80163	15.93095	15.45282	16.01080
14.29382	17.01021	15.79940	15.91383	15.45502	16.00260
14.30190	16.98987	15.80235	15.89830	15.46107	16.00662
14.29871	16.98403	15.80303	15.92177	15.45980	16.02012
14.28969	17.00152	15.80103	15.92297	15.45177	16.02453
14.28536	17.01344	15.79968	15.91198	15.45705	16.01522
14.29129	16.98891	15.79887	15.91538	15.46008	16.00472
14.29952	16.98075	15.80198	15.91143	15.45655	16.00573
14.30074	17.00626	15.80218	15.91675	15.45612	16.01416
14.29293	17.00818	15.79958	15.92991	15.45803	16.02325
14.28518	16.99084	15.79860	15.91880	15.45880	16.01853
14.28752	16.98589	15.80065	15.90220	15.45495	16.00714
14.29723	17.00528	15.80206	15.91227	15.45556	16.00264
14.30054	17.00614	15.80175	15.93023	15.46070	16.01091
14.29563	16.99340	15.80103	15.92776	15.45909	16.02002
14.28737	16.99085	15.79841	15.91319	15.45622	16.02000
14.28600	17.00044	15.79760	15.90692	15.45490	16.01314
14.29356	17.00862	15.80368	15.91378	15.45940	16.00588
14.30010	16.99090	15.80013	15.92964	15.45838	16.00746
14.29832	16.98869	15.79758	15.92724	15.45717	16.01709
14.28955	17.00723	15.80120	15.90772	15.45697	16.02159
14.28743	17.00585	15.80208	15.90485	15.45853	16.01477
14.29189	16.98858	15.80166	15.91888	15.45893	16.00804
14.29801	16.99089	15.80156	15.92665	15.45538	16.00622
14.30043	17.00869	15.80027	15.91855	15.45620	16.01281
14.29327	17.00541	15.80076	15.91027	15.46414	16.02140
14.28653	16.99116	15.80343	15.91038	15.46085	16.02023
14.29015	16.99272	15.80113	15.91951	15.45225	16.01000
14.29600	17.00352	15.80141	15.92558	15.45076	16.00438
14.29825	17.00918	15.80207	15.91755	15.46769	16.00869
14.29545	16.99068	15.79685	15.90609	15.45605	16.01828
14.28913	16.99099	15.80046	15.91453	15.44286	16.02103
14.28752	17.00680	15.80695	15.92689	15.44689	16.01261
14.29347	17.00754	15.79959	15.92309	15.46507	16.00536
14.29852	16.98836	15.79696	15.91056	15.44769	16.00687
14.29685	16.99003	15.80570	15.90701	15.44675	16.01576
14.29211	17.00999	15.80092	15.92223	15.46151	16.02166
14.28795	17.00355	15.79619	15.92996	15.47702	16.01856
14.29152	16.99134	15.80093	15.91659	15.44310	16.00814
14.29814	16.99138	15.80176	15.90586	15.43450	16.00500
14.29860	17.00366	15.80137	15.91177	15.48365	16.01278
14.29532	17.00407	15.80698	15.92813	15.47570	16.02062
14.28871	16.99324	15.80285	15.92862	15.42518	16.02150
14.28835	16.99452	15.79824	15.91295	15.45867	16.01227
14.29600	17.00144	15.80092	15.90846	15.48885	16.00496
14.29859	17.00405	15.80311	15.92173	15.44680	16.00967
14.29671	16.99160	15.80235	15.92901	15.43773	16.01889
14.29270	16.99584	15.80056	15.91877	15.46716	16.02068

14.28817	17.00400	15.79801	15.90872	15.47248	16.01433
14.29129	17.00156	15.79905	15.91384	15.43758	16.00743
14.29828	16.99495	15.80383	15.92354	15.45137	16.00624
14.29905	16.99107	15.80215	15.92562	15.46565	16.01576
14.29320	17.00654	15.79734	15.91832	15.46113	16.02192
14.28846	17.00163	15.79759	15.91118	15.43912	16.01489
14.28981	16.99194	15.80395	15.91845	15.45598	16.00618
14.29584	16.99694	15.80098	15.92864	15.46849	16.00555
14.30054	17.00176	15.79527	15.92243	15.45678	16.01353
14.29485	17.00297	15.80148	15.91090	15.44062	16.02118
14.28840	16.99172	15.80438	15.91343	15.46101	16.01933
14.29007	16.99792	15.79914	15.92460	15.47384	16.00797
14.29463	17.00126	15.79870	15.92469	15.44581	16.00500
14.29709	17.00214	15.80316	15.91538	15.44467	16.01292
14.29642	16.99772	15.80421	15.91362	15.47317	16.02055
14.28654	16.99230	15.79892	15.91733	15.46350	16.02092
14.29528	17.00435	15.80198	15.92481	15.44095	16.01261
14.30176	17.00158	15.80343	15.92239	15.45614	16.00443
14.29345	16.99437	15.80087	15.91414	15.47398	16.01021
14.28427	16.99438	15.80091	15.91614	15.45091	16.02037
14.28973	17.00376	15.80384	15.91987	15.44187	16.02055
14.31022	17.00214	15.80396	15.92006	15.46841	16.01364
14.31347	16.99027	15.80036	15.91942	15.46559	16.00663
14.29502	16.99596	15.80270	15.91564	15.44595	16.00774
14.27264	17.00397	15.80201	15.91700	15.44771	16.01684
14.28597	17.00257	15.80205	15.92277	15.46790	16.02306
14.29762	16.99080	15.80083	15.92124	15.46167	16.01673
14.30977	16.99559	15.80212	15.91497	15.44459	16.00699
14.30182	17.00587	15.80295	15.91873	15.45292	16.00820
14.28467	16.99925	15.80141	15.92048	15.47090	16.01520
14.28549	16.99486	15.79983	15.91872	15.45648	16.02081
14.30049	16.99590	15.80182	15.91819	15.43968	16.02000
14.30789	17.00457	15.80296	15.91598	15.46401	16.01126
14.29985	17.00309	15.80224	15.91861	15.46949	16.00517
14.28785	16.99432	15.80682	15.92208	15.44662	16.01281
14.28280	16.99621	15.80466	15.91940	15.44644	16.02006
14.29332	17.00341	15.79778	15.91341	15.46857	16.01903
14.30699	17.00161	15.79851	15.91748	15.46336	16.01349
14.30510	16.98884	15.80370	15.92621	15.44283	16.00877
14.29083	17.00138	15.80708	15.92351	15.45621	16.00917
14.28311	17.00824	15.80033	15.91462	15.46828	16.01722
14.28946	16.99863	15.79503	15.91376	15.45318	16.02177
14.30269	16.99577	15.80161	15.92081	15.44723	16.01502
14.30690	16.99879	15.80445	15.92582	15.46235	16.01137
14.29621	17.00517	15.80339	15.91955	15.46632	16.01137
14.28328	17.00129	15.80253	15.90976	15.44980	16.01354
14.28557	16.99508	15.80101	15.91364	15.44976	16.01767
14.30106	16.99533	15.80488	15.92443	15.46471	16.01728
14.30925	17.00488	15.80710	15.92424	15.46320	16.01192
14.30153	17.00324	15.79911	15.91659	15.44905	16.01109
14.28542	16.99043	15.80009	15.91296	15.45238	16.01295
14.28219	16.99909	15.80898	15.91834	15.46672	16.01422
14.29342	17.00572	15.80377	15.92408	15.45706	16.01536
14.30616	16.99569	15.79623	15.92498	15.44854	16.01612
14.30636	16.99280	15.80316	15.91687	15.45786	16.01210
14.29192	17.00423	15.80464	15.91261	15.46624	16.01107
14.28126	17.00348	15.80397	15.92192	15.45201	16.01305

14.28977	16.99321	15.80351	15.92578	15.44872	16.01437
14.30576	16.99904	15.80097	15.91869	15.46507	16.01615
14.30755	17.00152	15.79701	15.91680	15.46264	16.01576
14.29619	17.00367	15.80453	15.91729	15.44848	16.01215
14.28325	16.99917	15.80635	15.92121	15.45237	16.01198
14.28520	16.99322	15.80150	15.92390	15.46570	16.01530
14.30095	17.00135	15.80084	15.92048	15.45926	16.01667
14.30965	17.00468	15.80444	15.91447	15.44661	16.01489
14.29956	16.99986	15.80155	15.91914	15.45638	16.01310
14.28497	16.99292	15.80177	15.92310	15.46768	16.01113
14.28297	17.00073	15.80765	15.92206	15.45470	16.01227
14.29525	17.00364	15.80515	15.91926	15.44817	16.01549
14.30981	16.99749	15.79831	15.91675	15.46163	16.01663
14.30564	16.99486	15.79959	15.91935	15.46559	16.01443
14.28788	16.99840	15.80729	15.92373	15.44861	16.01189
14.27923	17.00494	15.80418	15.92076	15.45323	16.01103
14.29083	16.99427	15.80851	15.91717	15.46586	16.01308
14.30615	16.99601	15.80058	15.91720	15.45892	16.01676
14.30829	17.00153	15.78764	15.92197	15.44769	16.01529
14.29566	17.00014	15.80958	15.92287	15.45910	16.01281
14.28178	16.99789	15.80678	15.91913	15.46594	16.01035
14.28656	16.99605	15.78371	15.91769	15.45302	16.01309
14.30418	17.00045	15.80176	15.91886	15.45198	16.01673
14.31064	17.00225	15.81371	15.92153	15.45997	16.01815
14.29953	17.00034	15.79287	15.92369	15.46297	16.01373
14.28391	16.99701	15.79674	15.92039	15.45206	16.00925
14.28153	17.00004	15.80240	15.91658	15.45334	16.01198
14.29666	17.00546	15.80038	15.91984	15.46144	16.01637
14.31129	16.99678	15.80654	15.92348	15.45886	16.01778
14.30698	16.99907	15.80417	15.92039	15.45268	16.01667
14.28655	17.00002	15.79063	15.91870	15.45371	16.00973
14.27827	17.00089	15.79976	15.91915	15.46354	16.00864
14.28969	17.00012	15.81087	15.92115	15.45795	16.01578
14.30617	16.99622	15.79903	15.92108	15.44831	16.01960
14.31218	17.00259	15.79599	15.91969	15.46056	16.01627
14.29643	17.00005	15.80256	15.91808	15.46176	16.01177
14.27815	17.00246	15.80421	15.92037	15.45231	16.01084
14.28063	16.99777	15.80300	15.92306	15.45422	16.01180
14.30233	16.99961	15.80193	15.91990	15.46314	16.01724
14.31383	17.00412	15.80080	15.91722	15.45611	16.01995
14.30309	16.99854	15.80364	15.91893	15.45400	16.01415
14.28338	16.99941	15.80266	15.92207	15.45982	16.01096
14.27684	16.99824	15.79824	15.91890	15.45914	16.01162
14.29386	17.00271	15.80108	15.91677	15.45768	16.01318
14.31483	16.99970	15.80882	15.92015	15.45635	16.01650
14.31006	16.99723	15.80567	15.92014	15.45800	16.01814
14.28767	17.00214	15.79272	15.92134	15.45965	16.01265
14.27703	16.99922	15.79602	15.92164	15.45852	16.00885
14.28653	16.99965	15.81055	15.91842	15.45542	16.01410
14.30803	16.99883	15.80613	15.91912	15.45721	16.01714
14.31569	16.99990	15.79563	15.92262	15.46326	16.01593
14.29957	17.00022	15.79854	15.91917	15.45554	16.01498
14.27799	17.00209	15.80310	15.91655	15.45425	16.01142
14.27816	16.99989	15.80387	15.91981	15.46174	16.01058
14.29899	16.99553	15.80299	15.92067	15.45939	16.01916
14.31661	17.00228	15.79942	15.91939	15.45447	16.02016
14.30936	17.00099	15.80044	15.91969	15.45615	16.01283

14.28505	16.99791	15.80539	15.92169	15.46139	16.00898
14.27220	16.99832	15.79679	15.92231	15.45565	16.01080
14.28775	17.00207	15.79513	15.92135	15.45691	16.01545
14.31307	17.00252	15.80575	15.91807	15.45817	16.02075
14.31468	16.99798	15.80584	15.91705	15.45578	16.01813
14.29390	17.00113	15.79840	15.91977	15.45940	16.00978
14.27677	17.00161	15.79685	15.92331	15.45508	16.00743
14.28125	17.00258	15.80018	15.92079	15.45609	16.01531
14.30368	16.99828	15.80439	15.91762	15.45880	16.01975
14.31721	16.99921	15.80212	15.91865	15.46006	16.01938
14.30255	17.00161	15.79813	15.92177	15.45130	16.01368
14.27968	17.00061	15.80228	15.91977	15.45849	16.00873
14.27854	16.99859	15.80570	15.91783	15.46161	16.01219
14.29860	16.99675	15.80385	15.91899	15.45584	16.01928
14.31618	17.00289	15.79822	15.92111	15.45386	16.02044
14.30872	16.99880	15.79899	15.92212	15.45908	16.01633
14.28631	16.99882	15.80505	15.91880	15.45976	16.01053
14.27518	17.00087	15.80384	15.91797	15.45483	16.00784
14.28993	16.99702	15.79849	15.92057	15.45646	16.01481
14.31181	17.00079	15.80110	15.92201	15.45966	16.02176
14.31292	16.99925	15.80731	15.91894	15.45741	16.02010
14.29381	16.99868	15.80485	15.91824	15.45470	16.01085
14.27631	16.99928	15.79828	15.91880	15.45705	16.00828
14.28315	17.00193	15.80066	15.91945	15.46200	16.01264
14.30646	16.99952	15.80688	15.92196	15.45626	16.02051
14.31436	16.99621	15.80590	15.92067	15.45285	16.02086
14.29895	17.00227	15.80230	15.91813	15.46108	16.01402
14.28048	17.00100	15.79742	15.92092	15.45957	16.00767
14.28024	16.99945	15.80003	15.92199	15.45365	16.01001
14.30037	16.99544	15.80815	15.91894	15.45624	16.01913
14.31467	17.00090	15.80567	15.91792	15.46016	16.02381
14.30627	17.00444	15.79479	15.91969	15.45597	16.01842
14.28508	16.99596	15.80101	15.91935	15.45343	16.00925
14.27681	16.99945	15.80885	15.91900	15.45942	16.00885
14.29207	17.00159	15.80178	15.92158	15.45989	16.01557
14.31046	17.00446	15.79812	15.92096	15.45701	16.02174
14.30984	16.99859	15.80147	15.91843	15.45316	16.02097
14.29294	16.99660	15.80404	15.91989	15.45917	16.01272
14.27754	17.00604	15.80375	15.92128	15.46126	16.00534
14.28345	17.00234	15.80083	15.92150	15.45601	16.01120
14.30464	17.00091	15.79794	15.92292	15.45641	16.02229
14.31206	16.99811	15.80378	15.92075	15.45998	16.02514
14.29921	17.00129	15.80821	15.91704	15.45975	16.01432
14.28185	17.00579	15.80015	15.92145	15.45363	16.00654
14.28203	16.99967	15.79550	15.92132	15.45679	16.00900
14.29768	16.99603	15.80360	15.91895	15.46314	16.01565
14.31134	17.00177	15.80733	15.91949	15.45661	16.02548
14.30651	17.00554	15.80200	15.92097	15.45261	16.02318
14.28906	16.99717	15.79922	15.92015	15.45893	16.00948
14.28045	16.99366	15.80048	15.92106	15.46401	16.00361
14.29322	17.00428	15.80255	15.91900	15.45352	16.01199
14.30986	17.00091	15.80407	15.91729	15.45257	16.02341
14.30893	16.99747	15.80374	15.92258	15.46343	16.02665
14.29364	16.99502	15.79957	15.92457	15.45869	16.01667
14.28118	17.00214	15.80167	15.91891	15.45165	16.00457
14.28669	17.00150	15.80454	15.91604	15.45756	16.00676
14.30259	16.99881	15.80331	15.91747	15.46249	16.02087

14.31135	16.99686	15.79961	15.92161	15.45434	16.02745
14.30033	16.99645	15.80200	15.92222	15.45360	16.01809
14.28404	17.00470	15.80557	15.91969	15.46051	16.00951
14.28268	16.99902	15.79946	15.91777	15.45814	16.00669
14.29783	16.99636	15.79972	15.91889	15.45521	16.01315
14.31091	16.99832	15.80340	15.92416	15.45648	16.02541
14.30629	17.00340	15.79904	15.92350	15.46099	16.02405
14.29091	17.00026	15.80115	15.91913	15.45637	16.01143
14.28255	16.99613	15.80518	15.91905	15.45681	16.00517
14.29195	17.00184	15.79993	15.92142	15.45608	16.01187
14.30561	17.00326	15.80079	15.92190	15.45762	16.02046
14.30766	17.00240	15.80675	15.92035	15.46386	16.02488
14.29572	16.99855	15.80694	15.92045	15.45253	16.01675
14.28310	16.99814	15.80251	15.92034	15.45479	16.00441
14.28542	17.00472	15.79934	15.91959	15.46409	16.00687
14.29969	17.00241	15.80479	15.92019	15.45798	16.02113
14.30769	17.00028	15.80719	15.92092	15.45153	16.02555
14.30227	16.99744	15.80249	15.91941	15.45922	16.02150
14.28798	17.00318	15.80043	15.92110	15.46434	16.00963
14.28365	17.00221	15.80188	15.92234	15.45299	16.00329
14.29477	16.99814	15.80382	15.91966	15.45365	16.01552
14.30635	17.00173	15.80409	15.91958	15.46301	16.02941
14.30529	16.99878	15.80082	15.91903	15.45791	16.02505
14.29360	17.00304	15.80052	15.91905	15.45325	16.01287
14.28501	16.99891	15.80259	15.92013	15.45684	16.00484
14.29011	17.00133	15.80577	15.92273	15.46187	16.01227
14.30249	16.99937	15.80200	15.92207	15.45569	16.02693
14.30708	16.99918	15.80032	15.92122	15.45385	16.02947
14.29879	17.00028	15.80162	15.92012	15.45782	16.01467
14.28875	16.99876	15.80421	15.92004	15.46165	16.00264
14.28990	17.00312	15.80326	15.92044	15.45676	16.00738
14.29818	16.99713	15.80048	15.92332	15.45350	16.02148
14.30621	16.99930	15.80199	15.92016	15.45976	16.02801
14.30191	17.00087	15.80528	15.91808	15.46103	16.02129
14.29008	17.00127	15.80559	15.92007	15.45523	16.00727
14.28694	17.00035	15.79956	15.92202	15.45403	16.00430
14.29434	16.99702	15.80251	15.92150	15.46286	16.01644
14.30392	17.00189	15.80777	15.92242	15.45995	16.02721
14.30282	16.99864	15.80383	15.91904	15.45097	16.02548
14.29341	17.00222	15.79910	15.91826	15.46048	16.01397
14.28566	17.00165	15.80264	15.92298	15.46109	16.00434
14.29055	16.99853	15.80334	15.92289	15.45661	16.00960
14.30008	17.00270	15.80207	15.91948	15.45617	16.02468
14.30431	16.99946	15.80313	15.91870	15.46140	16.02854
14.29743	17.00105	15.80072	15.92107	15.45906	16.01776
14.28615	16.99897	15.80143	15.92199	15.45525	16.00763
14.28698	17.00053	15.80510	15.91920	15.45866	16.00737
14.29935	17.00054	15.80338	15.91766	15.45898	16.01760
14.30458	16.99942	15.79879	15.91957	15.45810	16.02747
14.29843	17.00244	15.80320	15.92307	15.45588	16.02333
14.28903	16.99586	15.80625	15.92277	15.45798	16.00955
14.28508	17.00141	15.80151	15.91770	15.45949	16.00438
14.29455	17.00260	15.79834	15.91682	15.45577	16.01350
14.30569	17.00223	15.80635	15.92307	15.45911	16.02443
14.30331	16.99658	15.80575	15.92409	15.45678	16.02689
14.29038	16.99798	15.79901	15.92051	15.45881	16.01481
14.28460	17.00570	15.79882	15.91858	15.45603	16.00363

14.29171	16.99934	15.80314	15.92135	15.45775	16.00739
14.30533	17.00094	15.80158	15.92402	15.46173	16.02200
14.30689	17.00160	15.80292	15.92498	15.45556	16.02743
14.29637	17.00048	15.80211	15.91966	15.45752	16.01908
14.28418	17.00036	15.79725	15.91652	15.46169	16.00581
14.28686	17.00167	15.80201	15.92237	15.45757	16.00282
14.30155	17.00168	15.80496	15.92518	15.45487	16.01463
14.30826	16.99686	15.79910	15.92179	15.46045	16.02809
14.29962	17.00355	15.80004	15.91869	15.45887	16.02330
14.28728	17.00085	15.80618	15.91927	15.45536	16.00688
14.28518	16.99564	15.80156	15.92242	15.45985	16.00207
14.29697	17.00305	15.79970	15.92640	15.45965	16.01058
14.30670	17.00142	15.80402	15.92024	15.45754	16.02430
14.30267	17.00102	15.80409	15.91703	15.45686	16.02646
14.29002	16.99997	15.80216	15.92249	15.46094	16.01551
14.28646	17.00275	15.80397	15.92486	15.45774	16.00299
14.29572	17.00155	15.80155	15.92182	15.45716	16.00776
14.30432	17.00031	15.80273	15.91703	15.45969	16.02133
14.30315	17.00257	15.80724	15.91918	15.45698	16.02796
14.29446	16.99776	15.80519	15.92490	15.45897	16.02007
14.28731	17.00272	15.80143	15.92256	15.46036	16.00733
14.29339	17.00221	15.80544	15.91779	15.45492	16.00419
14.30420	16.99953	15.80719	15.91965	15.45736	16.01533
14.30371	16.99910	15.80212	15.92529	15.46020	16.02701
14.29395	17.00155	15.80225	15.92367	15.45937	16.02427
14.28973	17.00273	15.80400	15.92044	15.45408	16.01247
14.29189	16.99792	15.80360	15.91794	15.46108	16.00374
14.30091	17.00249	15.80194	15.92025	15.45948	16.01049
14.30527	17.00096	15.80362	15.92489	15.45585	16.02243
14.29507	17.00121	15.80138	15.92231	15.45581	16.02631
14.28434	16.99868	15.80060	15.91641	15.46127	16.01719
14.29088	16.99884	15.80588	15.91901	15.45933	16.00794
14.30220	17.00351	15.80191	15.92557	15.45357	16.00722
14.30826	17.00171	15.79853	15.92674	15.45902	16.01682
14.29390	17.00200	15.80631	15.92024	15.46150	16.02623
14.29262	16.99805	15.80582	15.91735	15.45516	16.02287
14.28968	17.00296	15.80002	15.92252	15.45514	16.01122
14.28937	17.00303	15.80333	15.92720	15.46171	16.00529
14.31341	16.99994	15.80456	15.92218	15.46207	16.01018
14.29700	17.00108	15.80116	15.91697	15.45317	16.02218
14.28037	16.99762	15.80213	15.91905	15.45791	16.02662
14.29784	17.00346	15.80692	15.92424	15.46506	16.01605
14.30781	16.99971	15.80304	15.92653	15.45702	16.00453
14.30232	17.00054	15.80127	15.92118	15.45418	16.00598
14.31094	17.00072	15.80580	15.91719	15.46047	16.01895
14.29324	17.00022	15.80167	15.92024	15.46195	16.02653
14.27893	17.00426	15.80027	15.92706	15.45609	16.02210
14.30346	16.99789	15.80531	15.92468	15.45652	16.00778
14.31245	17.00067	15.80084	15.91883	15.45942	16.00289
14.30075	17.00162	15.79737	15.91603	15.46005	16.01565
14.29866	17.00132	15.80519	15.92242	15.45766	16.02743
14.28456	17.00165	15.80606	15.92694	15.45490	16.02508
14.28276	17.00176	15.79770	15.92337	15.46196	16.01389
14.30961	17.00010	15.80154	15.91544	15.45849	16.00462
14.30903	16.99874	15.80565	15.91617	15.45693	16.00950
14.29936	17.00531	15.80206	15.92467	15.45799	16.02362
14.29004	17.00147	15.80228	15.92966	15.46216	16.02810

14.27893	16.99700	15.80321	15.91984	15.45727	16.01901
14.29518	17.00113	15.80206	15.91520	15.45479	16.00829
14.31147	17.00350	15.80424	15.92115	15.46219	16.00640
14.30307	17.00159	15.80356	15.92627	15.45888	16.01564
14.29446	16.99699	15.79932	15.92454	15.45680	16.02612
14.28420	17.00211	15.80172	15.92002	15.45990	16.02330
14.28945	17.00035	15.80630	15.91648	15.45901	16.01297
14.30834	17.00104	15.80241	15.92170	15.45693	16.00703
14.30710	16.99908	15.79792	15.92884	15.45842	16.01292
14.29507	16.99640	15.80224	15.92257	15.46155	16.02267
14.28516	17.00538	15.80568	15.91699	15.45763	16.02605
14.28532	17.00162	15.80483	15.91842	15.45690	16.01759
14.30171	17.00029	15.80143	15.92382	15.46126	16.00681
14.31116	16.99841	15.80022	15.92627	15.45689	16.00894
14.30004	17.00395	15.80416	15.92124	15.45934	16.01901
14.28936	17.00528	15.80527	15.91581	15.45931	16.02603
14.28580	16.99854	15.80243	15.92036	15.45786	16.02235
14.29370	16.99954	15.80233	15.92531	15.45753	16.01084
14.30854	17.00459	15.80306	15.92642	15.46317	16.00507
14.30538	17.00549	15.80375	15.92200	15.45534	16.01379
14.29098	16.99761	15.80319	15.91632	15.45609	16.02393
14.28403	17.00210	15.80255	15.91883	15.46087	16.02450
14.28836	17.00370	15.80220	15.92612	15.45824	16.01810
14.30214	17.00249	15.80309	15.92350	15.45858	16.00913
14.30868	17.00305	15.80192	15.91784	15.45745	16.00946
14.29869	16.99800	15.80012	15.91970	15.46070	16.01912
14.28525	17.00230	15.80342	15.92511	15.45939	16.02759
14.28675	17.00543	15.80562	15.92691	15.45637	16.02328
14.29890	17.00167	15.80188	15.92227	15.45827	16.01228
14.30765	16.99830	15.80098	15.91716	15.45958	16.00870
14.30356	16.99925	15.80496	15.92021	15.45939	16.01468
14.28936	17.00769	15.80551	15.92681	15.45681	16.02329
14.28523	17.00085	15.80323	15.92504	15.45955	16.02524
14.29406	16.99973	15.80222	15.91989	15.46017	16.01678
14.30452	17.00080	15.80334	15.91806	15.45839	16.00850
14.30568	17.00183	15.80592	15.92247	15.45867	16.01009
14.29402	17.00317	15.80266	15.92706	15.45924	16.01922
14.28211	17.00032	15.79995	15.92262	15.45876	16.02589
14.29020	17.00145	15.80449	15.91612	15.45715	16.02106
14.30491	17.00244	15.80592	15.91841	15.45954	16.01049
14.30942	17.00288	15.80249	15.92422	15.46091	16.01000
14.29843	16.99830	15.80034	15.92631	15.45673	16.01675
14.28341	17.00479	15.80296	15.92135	15.45799	16.02289
14.28458	17.00516	15.80420	15.91679	15.45882	16.02257
14.30099	16.99697	15.80211	15.92076	15.46167	16.01544
14.31123	17.00352	15.80148	15.92568	15.45573	16.01140
14.30455	17.00381	15.80275	15.92448	15.45840	16.01452
14.28812	17.00037	15.80436	15.91905	15.46007	16.01978
14.28053	16.99939	15.80485	15.91860	15.45941	16.02368
14.29418	17.00208	15.80018	15.92203	15.45852	16.01944
14.31127	17.00214	15.79836	15.92617	15.45601	16.01213
14.30881	17.00034	15.80669	15.92287	15.46153	16.01108
14.29132	17.00100	15.80667	15.91890	15.45879	16.01783
14.28015	16.99990	15.80056	15.91908	15.45704	16.02350
14.28775	17.00393	15.80128	15.92546	15.45962	16.02131
14.30900	17.00093	15.80461	15.92807	15.46078	16.01499
14.31298	16.99942	15.80582	15.91985	15.45798	16.01062

14.29552	17.00181	15.80263	15.91720	15.45831	16.01303
14.27923	17.00018	15.80086	15.92449	15.45758	16.02128
14.28139	17.00272	15.80148	15.92764	15.45990	16.02355
14.30055	16.99918	15.80565	15.92302	15.45810	16.01650
14.31547	17.00388	15.80380	15.91654	15.45577	16.01104
14.30583	17.00220	15.79991	15.91830	15.46148	16.01245
14.28426	17.00004	15.80386	15.92584	15.46122	16.01772
14.27978	17.00409	15.80586	15.92855	15.45506	16.02501
14.29331	16.99832	15.80263	15.91941	15.46028	16.02229
14.31029	17.00397	15.80251	15.91393	15.46114	16.01253
14.31018	17.00382	15.80299	15.92164	15.45874	16.00979
14.29207	17.00156	15.80352	15.92808	15.45499	16.01740
14.27938	17.00147	15.80666	15.92449	15.45961	16.02505
14.28819	17.00129	15.80305	15.91847	15.46282	16.02267
14.30676	17.00394	15.79706	15.91642	15.45507	16.01655
14.31191	16.99975	15.80507	15.92367	15.45820	16.00956
14.29840	17.00347	15.80923	15.93024	15.46216	16.01226
14.28242	17.00374	15.80186	15.92592	15.45737	16.02464
14.28189	16.99902	15.79907	15.91724	15.45811	16.02566
14.30058	17.00132	15.80389	15.91828	15.45795	16.01468
14.31311	17.00257	15.80496	15.92581	15.45988	16.00818
14.30356	17.00128	15.80242	15.92977	15.46034	16.01181
14.28569	17.00068	15.80138	15.92485	15.45622	16.02110
14.28091	17.00378	15.80348	15.91936	15.45861	16.02672
14.29405	16.99927	15.80362	15.92058	15.46113	16.01843
14.30989	16.99984	15.80650	15.92651	15.45644	16.00733
14.30870	17.00377	15.80329	15.92803	15.45968	16.00877
14.29103	17.00249	15.79948	15.92431	15.45742	16.01927
14.27995	17.00216	15.80563	15.91915	15.45960	16.02639
14.28954	16.99782	15.80524	15.92142	15.45947	16.02424
14.30670	17.00348	15.79936	15.92616	15.45571	16.01212
14.31049	17.00118	15.80292	15.92672	15.46105	16.00613
14.29716	17.00112	15.80759	15.92184	15.46049	16.01391
14.28168	16.99985	15.80084	15.91943	15.45604	16.02512
14.28596	17.00060	15.80135	15.92103	15.45939	16.02795
14.30128	17.00415	15.80660	15.92465	15.46125	16.01692
14.31116	16.99787	15.80325	15.92545	15.46014	16.00614
14.30352	17.00278	15.80049	15.92116	15.45503	16.00878
14.28670	17.00270	15.80471	15.91858	15.46063	16.02188
14.28103	17.00123	15.80531	15.92289	15.46064	16.02882
14.29434	17.00295	15.80354	15.92744	15.45538	16.02102
14.31032	17.00037	15.80527	15.92032	15.46081	16.00745
14.30513	17.00078	15.80419	15.92708	15.46195	16.00489
14.29066	17.00314	15.80113	15.95606	15.45603	16.01728
14.28355	17.00389	15.80622	15.87293	15.45539	16.03017
14.29004	16.99870	15.80397	15.91201	15.46649	16.02664
14.30527	17.00005	15.80263	15.98830	15.45989	16.01076
14.30886	17.00399	15.80616	15.95672	15.45369	16.00142
14.29540	17.00106	15.80287	15.88264	15.46169	16.01090
14.28090	17.00242	15.80286	15.83378	15.46277	16.02786
14.28658	16.99977	15.80569	15.94190	15.45589	16.03035
14.30258	17.00312	15.80229	16.01337	15.45568	16.01841
14.30860	16.99946	15.80078	15.95024	15.46333	16.00247
14.30016	17.00284	15.80604	15.83354	15.46023	16.00547
14.28522	17.00493	15.80780	15.85643	15.45455	16.02331
14.28341	17.00072	15.80315	15.97659	15.45820	16.03223
14.29841	17.00297	15.80115	16.01080	15.46563	16.02335

14.30864	16.99879	15.80509	15.88414	15.45982	16.00621
14.30246	17.00397	15.80604	15.83263	15.45319	16.00094
14.28840	17.00283	15.80276	15.89944	15.46180	16.01721
14.28307	17.00180	15.80577	15.99919	15.46765	16.03403
14.29372	17.00049	15.80468	15.97275	15.45217	16.02782
14.30555	16.99833	15.80316	15.86476	15.45662	16.00749
14.30465	17.00680	15.80497	15.86127	15.46646	15.99799
14.29151	16.99972	15.80722	15.94380	15.46377	16.01132
14.28443	16.99703	15.80231	15.98107	15.44989	16.03189
14.29148	17.00315	15.80197	15.92337	15.46329	16.03414
14.30527	17.00191	15.80531	15.86631	15.46718	16.01267
14.31114	17.00145	15.80487	15.89538	15.45726	15.99869
14.29721	17.00126	15.80651	15.96709	15.45445	16.00562
14.28287	17.00333	15.80498	15.95256	15.46132	16.02764
14.28774	17.00156	15.79977	15.90654	15.46259	16.03813
14.30041	17.00340	15.80403	15.88195	15.45895	16.02366
14.30729	16.99997	15.81163	15.93054	15.45566	16.00117
14.30334	17.00242	15.80467	15.96208	15.46389	15.99835
14.28998	17.00789	15.79692	15.92432	15.46190	16.01777
14.28286	16.99841	15.80622	15.88910	15.45644	16.03559
14.29443	17.00088	15.81232	15.91175	15.45481	16.03188
14.30830	17.00364	15.80101	15.94806	15.46859	16.01040
14.30454	17.00548	15.80103	15.94617	15.45889	15.99720
14.29330	17.00335	15.80725	15.90746	15.45262	16.00652
14.28569	16.99925	15.80835	15.89045	15.46128	16.02661
14.28784	17.00355	15.80647	15.93198	15.46629	16.03613
14.30162	17.00493	15.80514	15.95324	15.45265	16.02111
14.31038	17.00640	15.80289	15.92810	15.45696	16.00105
14.29860	16.99792	15.80262	15.89237	15.46575	16.00098
14.28350	17.00268	15.80880	15.90817	15.45928	16.01932
14.28606	17.00505	15.80843	15.94287	15.45527	16.03485
14.29794	16.99958	15.79991	15.94532	15.46153	16.02640
14.30709	17.00220	15.80013	15.91378	15.46140	16.00827
14.30456	17.00063	15.80875	15.89576	15.46220	16.00147
14.29093	17.00227	15.80836	15.91958	15.45393	16.01397
14.28334	17.00036	15.80221	15.95148	15.46158	16.03102
14.29338	17.00048	15.79844	15.93477	15.46435	16.03261
14.30789	17.00193	15.80368	15.90245	15.45684	16.01562
14.30546	17.00175	15.80970	15.90693	15.45574	16.00105
14.29489	17.00129	15.80486	15.93201	15.46430	16.00755
14.28764	16.99910	15.79996	15.94453	15.46354	16.02557
14.28778	17.00259	15.80298	15.92198	15.45223	16.03298
14.30108	17.00113	15.80584	15.90167	15.46234	16.02351
14.30737	17.00340	15.80377	15.91469	15.46249	16.00762
14.29661	17.00385	15.80118	15.94235	15.45844	16.00240
14.28846	17.00048	15.80454	15.93399	15.45885	16.01583
14.28829	17.00387	15.80675	15.90946	15.46142	16.03070
14.29630	17.00238	15.80414	15.90798	15.45877	16.02776
14.30599	16.99911	15.80307	15.93041	15.45897	16.01181
14.30338	17.00151	15.80408	15.93837	15.46106	16.00467
14.29223	17.00697	15.80760	15.92334	15.45930	16.01278
14.28757	17.00091	15.80701	15.90797	15.46158	16.02585
14.29634	17.00009	15.80254	15.91420	15.45739	16.03195
14.30351	17.00388	15.80473	15.93625	15.45792	16.01946
14.30211	16.99964	15.80664	15.93369	15.46388	16.00338
14.29507	17.00473	15.80545	15.91374	15.45915	16.00603
14.28771	17.00077	15.80309	15.91090	15.45656	16.01916

14.29112	17.00011	15.80253	15.92917	15.45907	16.02825
14.30183	17.00236	15.80473	15.93622	15.46399	16.02408
14.30532	17.00048	15.80674	15.92346	15.45893	16.01229
14.29802	17.00061	15.80489	15.90859	15.45620	16.00650
14.28838	16.99959	15.80267	15.91532	15.46470	16.01535
14.29016	17.00481	15.80492	15.93191	15.45882	16.02881
14.29908	16.99750	15.80675	15.93327	15.45671	16.02621
14.30369	16.99638	15.80497	15.91639	15.46333	16.01302
14.30000	17.00175	15.80342	15.90984	15.46398	16.00516
14.29268	17.00201	15.80594	15.92527	15.45521	16.00812
14.28776	16.99996	15.80678	15.93718	15.45810	16.02209
14.29409	16.99962	15.80604	15.92754	15.46445	16.03278
14.30463	17.00648	15.80346	15.91236	15.45899	16.02225
14.30143	16.99760	15.80348	15.91456	15.45906	16.00514
14.29222	16.99782	15.80804	15.92874	15.45966	16.00797
14.28900	17.00441	15.80843	15.93418	15.46096	16.02138
14.29145	17.00198	15.80418	15.92109	15.45932	16.02944
14.30040	17.00266	15.80240	15.91139	15.45964	16.02691
14.30725	17.00237	15.80790	15.92312	15.45939	16.01127
14.29857	17.00161	15.80637	15.93625	15.46168	16.00240
14.28735	17.00220	15.80111	15.92988	15.46136	16.01279
14.29041	17.00639	15.80470	15.91622	15.45641	16.02844
14.29994	17.00429	15.80430	15.91723	15.45973	16.02875
14.30641	16.99776	15.80217	15.92747	15.46385	16.01576
14.30276	17.00713	15.80534	15.93165	15.45903	16.00679
14.29065	17.00447	15.80793	15.92242	15.45567	16.00860
14.28526	16.99895	15.80286	15.91236	15.46039	16.02323
14.29714	17.00342	15.80454	15.92057	15.46357	16.03158
14.30645	17.00487	15.80748	15.93202	15.45539	16.02382
14.30194	17.00045	15.80489	15.92769	15.45962	16.01148
14.29201	16.99933	15.80514	15.91557	15.46293	16.00989
14.28593	17.00367	15.80593	15.91638	15.45922	16.01758
14.29041	17.00109	15.80340	15.92826	15.45928	16.02659
14.30170	17.00361	15.80626	15.93110	15.45932	16.02747
14.30407	17.00140	15.80960	15.92375	15.46084	16.01738
14.29679	16.99641	15.80509	15.91454	15.45878	16.00692
14.28776	17.00220	15.80410	15.92023	15.46111	16.00918
14.28837	17.00248	15.80915	15.93294	15.45884	16.02067
14.29809	17.00173	15.80719	15.93159	15.46032	16.02443
14.30614	16.99799	15.80451	15.92099	15.45898	16.01946
14.30195	17.00590	15.80518	15.91827	15.45758	16.00949
14.29150	17.00206	15.80576	15.92517	15.46127	16.00590
14.28873	17.00008	15.80678	15.92861	15.46139	16.01481
14.29726	17.00330	15.80646	15.92140	15.45779	16.02645
14.30579	16.99989	15.80267	15.91562	15.45905	16.02401
14.30456	17.00637	15.80045	15.91952	15.46074	16.01355
14.29473	17.00135	15.80623	15.92695	15.46175	16.00997
14.28892	16.99852	15.80702	15.92637	15.45887	16.01523
14.29557	17.00206	15.79780	15.92059	15.46074	16.02332
14.30352	17.00163	15.80196	15.92063	15.45783	16.02754
14.30492	17.00148	15.80846	15.92711	15.46025	16.02068
14.29684	16.99720	15.80319	15.93003	15.46105	16.01160
14.29032	17.00509	15.80192	15.92405	15.45988	16.01485
14.29396	17.00196	15.80525	15.91896	15.46021	16.02360
14.30081	17.00127	15.80386	15.92323	15.45706	16.02668
14.30173	17.00070	15.80419	15.93002	15.46198	16.02429
14.29736	17.00028	15.80591	15.92800	15.45876	16.01685

14.29236	17.00733	15.80403	15.92061	15.45995	16.01290
14.29245	17.00168	15.80625	15.92043	15.45992	16.01899
14.29636	16.99939	15.80866	15.92717	15.46100	16.02568
14.30060	17.00129	15.80563	15.93199	15.46118	16.02573
14.29882	17.00629	15.80162	15.92536	15.45938	16.02117
14.29380	17.00296	15.80694	15.91970	15.45969	16.01668
14.29341	16.99998	15.80710	15.92056	15.46175	16.01480
14.29674	17.00305	15.80316	15.92910	15.46132	16.02042
14.29942	17.00521	15.80476	15.93252	15.45743	16.02518
14.29888	17.00594	15.80679	15.92125	15.45886	16.02421
14.29728	16.99914	15.80607	15.91509	15.46093	16.01915
14.29300	17.00372	15.80621	15.92537	15.45890	16.01548
14.29237	17.01012	15.80659	15.93258	15.46078	16.01525
14.29614	17.00191	15.80447	15.92979	15.46095	16.01902
14.29990	17.00072	15.80497	15.90835	15.46029	16.02372
14.29833	17.00228	15.80722	15.92746	15.45787	16.02363
14.29305	17.00888	15.80587	16.00059	15.45927	16.01958
14.29143	17.00201	15.80399	15.93073	15.46220	16.01469
14.29386	16.99843	15.80586	15.87684	15.45692	16.01209
14.29805	17.00420	15.80560	15.94455	15.45921	16.01984
14.29977	17.00558	15.80479	15.97919	15.45917	16.02879
14.29608	17.00503	15.80627	15.96266	15.46206	16.02641
14.28937	16.99396	15.80781	15.87248	15.45872	16.01615
14.29117	17.00390	15.80364	15.87624	15.45945	16.00982
14.29799	17.00693	15.80233	15.95683	15.46301	16.01180
14.29927	17.00133	15.80997	15.99608	15.46015	16.02546
14.29710	16.99539	15.80556	15.92511	15.46065	16.03097
14.29252	17.00145	15.80059	15.85843	15.45775	16.01852
14.28986	17.00880	15.80668	15.89777	15.46023	16.00438
14.29387	17.00061	15.81156	16.00840	15.46146	16.00461
14.30337	16.99657	15.80409	15.97669	15.45912	16.01778
14.30115	16.99893	15.80233	15.86112	15.45903	16.02882
14.29193	17.00841	15.80865	15.85597	15.46249	16.02512
14.28925	17.00404	15.80788	15.95177	15.46017	16.00843
14.29294	16.99429	15.80712	15.99176	15.45772	16.00188
14.30030	16.99972	15.80698	15.91236	15.46203	16.01322
14.30431	17.00550	15.80460	15.86384	15.46365	16.02868
14.29689	17.00657	15.80646	15.89910	15.45923	16.02945
14.28864	16.99752	15.80876	15.96666	15.45766	16.01490
14.29070	16.99671	15.80275	15.96158	15.46619	16.00282
14.30054	17.00784	15.80260	15.89460	15.46081	16.01019
14.30427	17.00623	15.80790	15.87018	15.45567	16.02590
14.29995	16.99602	15.80424	15.94207	15.46278	16.03018
14.29008	16.99626	15.80294	15.96711	15.46046	16.02023
14.28659	17.01331	15.80669	15.92237	15.45931	16.00459
14.29746	17.00278	15.80590	15.88155	15.45888	16.00428
14.30751	16.99280	15.80479	15.90671	15.46038	16.02082
14.30183	17.00177	15.80659	15.96248	15.46306	16.03154
14.29394	17.00732	15.80163	15.94765	15.45489	16.02541
14.28840	17.00732	15.80284	15.89620	15.46069	16.01141
14.29045	16.99594	15.81274	15.88881	15.46215	16.00499
14.29984	16.99840	15.80769	15.93423	15.45816	16.01461
14.30535	17.00363	15.79739	15.95824	15.46161	16.02948
14.29684	17.00720	15.80785	15.92536	15.46012	16.03035
14.28632	16.99861	15.81068	15.88632	15.46191	16.01441
14.28786	16.99227	15.80301	15.91469	15.46121	16.00329
14.29811	17.01131	15.80548	15.95096	15.46195	16.00797

14.30581	17.00506	15.80740	15.94573	15.46051	16.02351
14.29981	16.99639	15.80452	15.90720	15.46366	16.03239
14.29080	16.99814	15.80851	15.89262	15.46114	16.02283
14.28660	17.00194	15.80408	15.92704	15.46140	16.00646
14.29335	17.00710	15.80172	15.95209	15.46296	16.00504
14.30675	16.99826	15.80961	15.92852	15.46271	16.01695
14.30616	16.99854	15.80982	15.89818	15.45995	16.02722
14.29194	17.00326	15.79909	15.90949	15.46055	16.02506
14.28599	17.00400	15.80274	15.94048	15.46473	16.01228
14.29410	16.99837	15.80949	15.94619	15.46019	16.00455
14.30423	17.00009	15.80812	15.91270	15.45603	16.01256
14.30542	17.00948	15.80320	15.90184	15.46438	16.02726
14.29557	16.99603	15.80451	15.92262	15.46383	16.02801
14.28570	16.99903	15.80602	15.94459	15.45427	16.01778
14.28945	17.00247	15.80759	15.93212	15.46027	16.00740
14.30323	17.00690	15.80574	15.90452	15.46287	16.00876
14.30567	17.00740	15.80379	15.90961	15.45891	16.02036
14.29740	16.99224	15.80674	15.93751	15.45643	16.02915
14.28919	17.00218	15.80796	15.93970	15.46456	16.02198
14.28942	17.00820	15.80473	15.91475	15.45755	16.01002
14.29862	17.00453	15.80082	15.90481	15.45993	16.00837
14.30426	16.99527	15.80599	15.92294	15.45981	16.01710
14.30082	17.00078	15.80882	15.94132	15.46002	16.02820
14.29172	17.00961	15.80642	15.92926	15.46054	16.02771
14.28971	16.99960	15.80534	15.90898	15.45945	16.01294
14.29431	16.99998	15.80471	15.90889	15.45823	16.00344
14.30183	17.00185	15.80925	15.93190	15.46133	16.01178
14.30209	17.00483	15.80871	15.93880	15.46177	16.02537
14.29408	17.00373	15.79946	15.91876	15.45777	16.03013
14.28821	16.99694	15.80240	15.90623	15.46112	16.01855
14.29361	17.00332	15.81121	15.92222	15.46485	16.00278
14.30281	17.00718	15.80589	15.93519	15.45950	16.00379
14.30350	16.99872	15.80135	15.93008	15.45808	16.02202
14.29675	16.99622	15.80683	15.91243	15.46577	16.03273
14.29163	17.00290	15.80875	15.90999	15.46476	16.02398
14.29296	17.00598	15.80476	15.92999	15.45797	16.00661
14.29870	17.00049	15.80343	15.93682	15.46040	16.00187
14.30468	16.99699	15.80363	15.91861	15.46957	16.01456
14.29985	17.00354	15.80714	15.90759	15.45943	16.03177
14.29026	17.00628	15.80910	15.92196	15.45987	16.03043
14.29188	16.99599	15.80194	15.93529	15.46380	16.01446
14.30017	16.99982	15.80300	15.92797	15.46676	16.00067
14.30386	17.00676	15.80722	15.91382	15.45609	16.00735
14.29953	17.00432	15.80667	15.91484	15.45809	16.02695
14.29161	16.99783	15.80635	15.92921	15.46563	16.03238
14.28894	16.99810	15.80361	15.93618	15.46026	16.01991
14.29861	17.00742	15.80105	15.92091	15.45752	16.00356
14.30551	17.00608	15.80617	15.90920	15.45897	16.00248
14.30136	16.99905	15.80708	15.92122	15.46701	16.01683
14.29315	16.99434	15.80368	15.93635	15.45908	16.03142
14.28977	17.00602	15.80366	15.93295	15.45618	16.02811
14.29354	17.00733	15.80465	15.91046	15.46545	16.01163
14.30175	16.99633	15.80621	15.90497	15.46512	16.00129
14.30510	16.99696	15.80704	15.93301	15.45720	16.01150
14.29613	17.00465	15.80585	15.93298	15.45962	16.02805
14.28843	17.00882	15.80590	15.91900	15.46672	16.03197
14.29352	16.99735	15.80548	15.91978	15.46046	16.01808

14.29880	16.99817	15.80455	15.91708	15.45739	16.00358
14.30154	17.00595	15.80666	15.92564	15.46319	16.00560
14.29856	17.00846	15.80585	15.93382	15.46259	16.02134
14.28687	16.99925	15.80504	15.92268	15.46085	16.03072
14.28565	16.99383	15.80818	15.90878	15.45761	16.02366
14.29415	17.00773	15.80323	15.91883	15.46315	16.01052
14.30159	17.00770	15.80312	15.93415	15.46342	16.00297
14.30315	16.99976	15.80959	15.92603	15.45916	16.01306
14.29509	16.99813	15.80714	15.91724	15.46011	16.02692
14.28569	16.99794	15.80237	15.91974	15.46299	16.02727
14.28742	17.01046	15.80567	15.92187	15.46077	16.01495
14.29870	17.00043	15.80633	15.92869	15.45713	16.00599
14.30859	16.99618	15.80687	15.92675	15.46264	16.00936
14.30314	17.00553	15.80697	15.91459	15.46190	16.02142
14.28932	17.00528	15.80291	15.91642	15.45807	16.02899
14.28373	17.00010	15.80244	15.92802	15.46171	16.02043
14.29838	16.99505	15.80894	15.92900	15.46396	16.00853
14.31463	17.00592	15.80645	15.92053	15.46173	16.00687
14.31028	17.00550	15.80188	15.91796	15.45755	16.01792
14.29001	17.00266	15.80671	15.92093	15.46092	16.02712
14.28015	16.99867	15.80678	15.92728	15.46389	16.02324
14.29519	17.00005	15.80349	15.92607	15.46020	16.01254
14.31542	17.00690	15.80764	15.91769	15.45907	16.00510
14.31289	17.00169	15.80533	15.91892	15.45970	16.01269
14.28981	16.99721	15.80447	15.92634	15.46647	16.02556
14.27650	17.00023	15.80796	15.92534	15.45884	16.02563
14.29002	17.00607	15.80421	15.92087	15.45720	16.01583
14.31138	17.00123	15.80402	15.92112	15.46395	16.00812
14.31441	16.99809	15.80869	15.92013	15.46436	16.00938
14.29087	17.00481	15.80858	15.92290	15.45616	16.01947
14.27442	17.00173	15.80420	15.92386	15.46071	16.02569
14.28470	17.00047	15.80659	15.92004	15.46823	16.02048
14.30581	16.99880	15.80875	15.92285	15.45900	16.01049
14.31408	17.00169	15.80802	15.91944	15.45583	16.00790
14.29710	17.00326	15.80638	15.91621	15.46423	16.01675
14.27635	16.99941	15.80918	15.92137	15.46543	16.02436
14.28212	17.00056	15.80698	15.92354	15.45880	16.02383
14.30345	17.00270	15.80251	15.92045	15.45946	16.01526
14.31424	17.00544	15.80506	15.92042	15.46589	16.00898
14.30368	17.00190	15.80921	15.92231	15.46101	16.01315
14.28493	17.00053	15.80426	15.92239	15.45830	16.02042
14.28083	17.00220	15.80276	15.92166	15.46382	16.02471
14.30048	17.00321	15.80575	15.91924	15.46371	16.01887
14.31413	17.00395	15.80331	15.91790	15.46032	16.01187
14.30562	16.99679	15.80536	15.92873	15.45873	16.01167
14.29077	17.00101	15.80777	15.92626	15.46403	16.01792
14.28668	17.00322	15.80863	15.91558	15.46016	16.02408
14.29511	17.00204	15.80370	15.92097	15.46132	16.02049
14.30727	17.00185	15.80484	15.92097	15.45718	16.01356
14.30531	17.00291	15.80750	15.91455	15.46078	16.01109
14.29228	17.00292	15.80849	15.92790	15.46425	16.01444
14.28854	17.00212	15.80642	15.93119	15.45867	16.02031
14.29371	17.00307	15.80503	15.92261	15.45752	16.02322
14.29921	16.99926	15.80542	15.91461	15.46451	16.01848
14.30008	17.00466	15.80686	15.92212	15.46223	16.01555
14.29384	17.00487	15.80721	15.93304	15.45611	16.01205
14.29124	16.99592	15.80722	15.92258	15.46127	16.01823

14.29809	16.99966	15.80807	15.91858	15.46780	16.02391
14.30012	17.00241	15.80490	15.91752	15.45782	16.02288
14.29376	17.00250	15.80448	15.92564	15.45713	16.01510
14.29024	16.99945	15.80952	15.92941	15.46699	16.01075
14.29455	17.00320	15.80711	15.92149	15.46441	16.01342
14.30155	17.00092	15.80192	15.91654	15.45802	16.02078
14.30455	16.99893	15.80192	15.92337	15.45911	16.02445
14.29843	17.00468	15.80711	15.92665	15.46515	16.01760
14.28875	16.99971	15.80811	15.92632	15.46114	16.00968
14.29191	17.00591	15.80298	15.91860	15.46008	16.00967
14.30386	17.00422	15.80290	15.91852	15.46111	16.01694
14.30947	17.00017	15.80675	15.92340	15.46730	16.02213
14.30230	17.00429	15.80926	15.92814	15.45910	16.02205
14.28742	17.00604	15.80784	15.92285	15.45507	16.01295
14.28624	17.00564	15.80269	15.91851	15.46623	16.00858
14.30127	16.99640	15.80605	15.92431	15.46374	16.01508
14.31119	17.00544	15.80938	15.92629	15.45910	16.02387
14.30423	17.00681	15.80473	15.92240	15.45925	16.02243
14.28881	17.00040	15.80337	15.91992	15.46388	16.01525
14.28287	17.00058	15.80687	15.92210	15.46211	16.01158
14.29420	17.00090	15.80509	15.92489	15.46002	16.01347
14.30508	17.00406	15.80666	15.92896	15.46011	16.02158
14.30037	17.00061	15.80868	15.92173	15.45996	16.02352
14.28868	17.00048	15.80320	15.91097	15.46435	16.01727
14.28624	16.99748	15.80600	15.92081	15.45915	16.01293
14.29309	17.00034	15.80984	15.93657	15.46175	16.01591
14.30201	17.00252	15.80413	15.92219	15.46555	16.01919
14.30077	16.99526	15.80414	15.91408	15.45876	16.02141
14.29059	16.99900	15.80889	15.91569	15.45828	16.01854
14.28776	16.99839	15.80758	15.92253	15.46574	16.01373
14.29512	16.99970	15.80343	15.93412	15.46285	16.01421
14.30020	16.99644	15.80507	15.92424	15.45587	16.02078
14.30078	17.00108	15.80682	15.91235	15.46252	16.01907
14.29709	17.00007	15.80369	15.91725	15.46533	16.01445
14.29295	16.99536	15.80672	15.93359	15.45662	16.01231
14.29351	17.00138	15.80628	15.92746	15.45995	16.01434
14.29856	16.99699	15.80465	15.91433	15.46248	16.01796
14.30236	16.99908	15.80641	15.91152	15.45849	16.02264
14.30126	17.00100	15.80603	15.92641	15.45869	16.01765
14.29721	16.99678	15.80759	15.93680	15.46457	16.01033
14.29575	16.99768	15.80906	15.92668	15.46019	16.01195
14.29828	16.99965	15.80686	15.90767	15.45820	16.02119
14.30137	17.00130	15.80300	15.91633	15.46369	16.02408
14.30196	16.99672	15.80649	15.93941	15.45770	16.02007
14.29721	17.00070	15.81120	15.93758	15.46285	16.01047
14.29227	17.00079	15.80826	15.91234	15.46389	16.00745
14.29446	16.99889	15.80565	15.90714	15.45640	16.01825
14.29999	17.00321	15.81012	15.92572	15.46153	16.02827
14.29977	16.99757	15.80724	15.93274	15.46637	16.02436
14.29934	17.00098	15.80692	15.92732	15.45773	16.01106
14.29455	17.00260	15.81003	15.91710	15.46050	16.00576
14.29263	17.00268	15.80742	15.91662	15.46395	16.01198
14.29679	17.00050	15.80529	15.92195	15.46000	16.02435
14.29914	17.00244	15.80789	15.93397	15.46049	16.02732
14.29616	17.00352	15.80716	15.92840	15.46131	16.01443
14.29410	17.00365	15.80670	15.91319	15.46467	16.00152
14.29469	17.00435	15.80879	15.91434	15.45798	16.00931

14.29548	16.99731	15.80668	15.92696	15.46019	16.02579
14.29742	17.00454	15.80397	15.92650	15.46750	16.03120
14.30009	17.00493	15.80732	15.92396	15.45304	16.01876
14.29650	16.99998	15.80688	15.91972	15.46504	16.00575
14.29284	17.00240	15.80516	15.91940	15.46222	16.00574
14.29586	17.00037	15.80697	15.92794	15.45962	16.01944
14.29771	17.00373	15.80539	15.92362	15.45857	16.03139
14.29584	16.99991	15.80570	15.91855	15.46232	16.02635
14.29320	17.00179	15.80333	15.91197	15.46067	16.01087
14.29355	16.99932	15.80427	15.95917	15.45765	16.00254
14.29596	17.00252	15.81031	15.95248	15.46017	16.01422
14.30055	17.00073	15.80870	15.88520	15.46368	16.02911
14.30024	16.99547	15.80310	15.90523	15.45762	16.03197
14.29360	17.00568	15.80731	15.94806	15.45980	16.01969
14.29170	17.00113	15.80891	15.94987	15.46217	16.00268
14.29764	17.00165	15.80568	15.91932	15.46118	16.00466
14.30322	17.00146	15.80915	15.89071	15.46150	16.02399
14.30098	17.00060	15.80782	15.90693	15.45994	16.03452
14.29542	17.00450	15.80273	15.95139	15.46028	16.02453
14.29169	16.99881	15.80766	15.95635	15.46325	16.00604
14.29422	17.00249	15.80652	15.90503	15.46247	15.99986
14.30322	17.00041	15.80107	15.88463	15.45616	16.01372
14.30433	17.00281	15.80564	15.93038	15.46225	16.03391
14.29415	17.00253	15.80839	15.95706	15.46428	16.03189
14.28851	17.00056	15.80259	15.92610	15.45816	16.00804
14.29237	17.00405	15.80525	15.89659	15.45752	15.99629
14.29687	17.00287	15.80961	15.90033	15.46321	16.00661
14.30130	17.00299	15.80606	15.94031	15.46592	16.02853
14.29667	16.99985	15.80909	15.95575	15.45300	16.03573
14.28718	17.00146	15.80908	15.92010	15.46322	16.01778
14.28898	17.00299	15.80528	15.89435	15.46134	15.99858
14.30064	16.99936	15.80864	15.91824	15.46379	15.99977
14.30356	17.00333	15.80855	15.95088	15.45041	16.01898
14.30017	17.00255	15.80240	15.93864	15.46765	16.03395
14.29393	17.00273	15.80468	15.90345	15.46068	16.02679
14.28910	17.00082	15.81009	15.90208	15.45946	16.00721
14.29673	17.00111	15.80270	15.92955	15.45176	15.99838
14.30637	17.00405	15.80379	15.94470	15.47280	16.01135
14.30082	17.00058	15.80943	15.92711	15.45760	16.03338
14.29040	16.99940	15.80788	15.89635	15.45435	16.03506
14.28895	17.00142	15.80642	15.90836	15.46201	16.01742
14.29535	17.00635	15.81275	15.94144	15.46615	16.00395
14.30339	17.00023	15.80504	15.93940	15.45191	16.00772
14.30431	16.99812	15.79615	15.91346	15.46172	16.02484
14.29439	17.00413	15.81675	15.90547	15.46415	16.03520
14.28704	17.00058	15.81988	15.92380	15.45520	16.02263
14.29206	17.00390	15.78836	15.94495	15.45940	16.00430
14.30176	16.99876	15.78681	15.93361	15.46267	16.00575
14.30628	17.00107	15.82005	15.90940	15.46239	16.02082
14.29744	17.00273	15.81973	15.91285	15.45678	16.03440
14.28702	17.00197	15.79838	15.93664	15.46411	16.03086
14.28679	17.00055	15.79068	15.94304	15.45531	16.01234
14.29875	16.99917	15.80229	15.92000	15.46464	16.00187
14.30738	17.00423	15.82554	15.90319	15.46008	16.01360
14.30294	17.00332	15.81328	15.91498	15.46034	16.03073
14.29180	17.00346	15.78380	15.93504	15.46209	16.03014
14.28484	16.99460	15.80319	15.93231	15.46344	16.01614

14.29218	17.00171	15.82251	15.91633	15.45798	16.00505
14.30620	17.00922	15.80647	15.91164	15.46009	16.00907
14.30752	16.99838	15.79747	15.92965	15.46582	16.02310
14.29485	16.99801	15.80628	15.93971	15.45451	16.02975
14.28491	16.99917	15.81454	15.92529	15.46374	16.02300
14.28668	17.00552	15.81127	15.90774	15.46347	16.01241
14.30017	17.00229	15.79809	15.91545	15.46168	16.00758
14.30855	16.99509	15.80104	15.92998	15.45437	16.01705
14.29886	16.99937	15.81305	15.93065	15.46754	16.02836
14.28565	17.00625	15.81109	15.92095	15.45642	16.02677
14.28481	17.00488	15.80069	15.91460	15.46207	16.01800
14.29598	16.99217	15.80055	15.92087	15.45945	16.00878
14.31018	17.00093	15.81178	15.93470	15.46357	16.00947
14.30733	17.00817	15.81087	15.92873	15.45701	16.02336
14.29062	17.00023	15.80254	15.91477	15.46435	16.03265
14.28369	16.99759	15.80201	15.91647	15.46151	16.02518
14.29524	16.99816	15.80763	15.92624	15.46065	16.00931
14.30914	17.01039	15.81092	15.93028	15.45987	16.00228
14.31118	17.00198	15.80882	15.92471	15.45884	16.01404
14.29655	16.99483	15.80050	15.91604	15.46230	16.02686
14.28261	17.00021	15.80753	15.92236	15.45766	16.03138
14.28837	17.00447	15.81376	15.93257	15.46136	16.01540
14.30317	17.00333	15.80555	15.92864	15.45804	16.00037
14.31087	16.99751	15.80074	15.91841	15.46472	16.00604
14.30269	17.00299	15.80614	15.91838	15.45588	16.02649
14.28565	17.00240	15.81339	15.92706	15.46078	16.03031
14.28207	17.00185	15.80878	15.93242	15.46251	16.02182
14.29821	16.99987	15.80142	15.92553	15.45987	16.00676
14.31173	17.00037	15.80353	15.91537	15.45945	16.00421
14.30595	17.00503	15.81465	15.91669	15.46218	16.02009
14.29075	16.99968	15.81478	15.92806	15.46077	16.03153
14.28374	16.99998	15.80098	15.93053	15.45897	16.02870
14.29179	16.99836	15.79765	15.92179	15.45982	16.01360
14.30831	17.00480	15.81591	15.91510	15.46210	16.00926
14.31066	17.00419	15.81814	15.92058	15.45974	16.01637
14.29574	16.99792	15.79624	15.93123	15.46172	16.02915
14.28299	17.00412	15.79348	15.93007	15.45890	16.02955
14.28755	17.00356	15.81635	15.91896	15.45900	16.01490
14.30268	17.00550	15.81579	15.91532	15.46396	16.00534
14.31163	16.99993	15.78992	15.92730	15.46126	16.01216
14.30176	17.00333	15.80105	15.93538	15.45920	16.02474
14.28706	17.00932	15.82600	15.92784	15.45813	16.02978
14.28622	17.00051	15.80825	15.91565	15.46294	16.01954
14.29896	17.00138	15.79412	15.91998	15.45656	16.00568
14.30887	17.00101	15.80969	15.93198	15.45790	16.00651
14.30580	17.00596	15.81208	15.93116	15.46154	16.01859
14.29249	17.00155	15.80535	15.92049	15.45927	16.02918
14.28409	17.00031	15.80339	15.91505	15.45705	16.02485
14.29254	17.00311	15.80536	15.92150	15.45985	16.01249
14.30452	17.00286	15.80933	15.92936	15.46148	16.00956
14.30807	17.00322	15.81220	15.92683	15.45742	16.01720
14.29907	16.99869	15.80590	15.91363	15.46074	16.02599
14.28599	17.00376	15.80196	15.91509	15.45960	16.02697
14.28816	17.00568	15.80960	15.93199	15.45652	16.01648
14.30275	17.00073	15.81147	15.93315	15.46120	16.00713
14.30949	17.00142	15.80352	15.92081	15.46338	16.01463
14.30117	17.00389	15.80282	15.91430	15.45985	16.02662

14.28871	17.00527	15.80779	15.91999	15.46016	16.03092
14.28371	16.99810	15.80930	15.93054	15.46309	16.01928
14.29635	17.00088	15.80498	15.92984	15.46033	16.01003
14.31049	17.00161	15.80371	15.91961	15.45808	16.01149
14.30700	17.00020	15.80821	15.91529	15.46236	16.02041
14.29217	17.00055	15.81144	15.92406	15.45845	16.02734
14.28453	16.99762	15.80687	15.93419	15.45929	16.02450
14.29130	17.00095	15.80100	15.92180	15.46061	16.01296
14.30727	17.00190	15.80706	15.91533	15.46114	16.00944
14.31243	17.00073	15.81188	15.92189	15.45886	16.01579
14.29849	17.00017	15.80730	15.93121	15.45965	16.02344
14.28345	17.00195	15.80258	15.92972	15.46169	16.02463
14.28587	17.00255	15.80547	15.92254	15.46084	16.01643
14.30196	16.99957	15.80951	15.91710	15.46012	16.01024
14.31146	17.00222	15.80880	15.92475	15.46141	16.01502
14.30508	17.00106	15.80165	15.93105	15.45781	16.02406
14.28688	17.00383	15.79914	15.92263	15.46023	16.02444
14.28042	17.00081	15.81061	15.91483	15.46171	16.01971
14.29439	17.00052	15.80871	15.92382	15.46111	16.01420
14.31086	17.00548	15.79913	15.93132	15.45850	16.01680
14.30841	17.00166	15.80315	15.92790	15.46237	16.02564
14.29332	17.00523	15.80748	15.91740	15.45995	16.02791
14.28235	17.00134	15.80669	15.91589	15.45944	16.01808
14.29125	17.00304	15.80535	15.92633	15.45956	16.01195
14.30698	17.00395	15.80112	15.93373	15.46064	16.01245
14.30995	17.00367	15.80496	15.92669	15.46029	16.01807
14.29787	17.00298	15.81302	15.91556	15.45779	16.02792
14.28563	17.00000	15.80468	15.92090	15.45905	16.02536
14.28914	17.00401	15.80128	15.93044	15.46141	16.01508
14.30360	17.00374	15.81004	15.93399	15.46105	16.01175
14.30853	17.00216	15.81145	15.92275	15.45686	16.01698
14.30088	16.99921	15.80653	15.91492	15.46212	16.02565
14.29067	17.00366	15.80580	15.92419	15.46471	16.03129
14.28857	17.00853	15.80852	15.93494	15.45351	16.02302
14.29794	16.99607	15.81173	15.92635	15.45923	16.00630
14.30617	17.00208	15.80693	15.91377	15.46473	16.00891
14.30359	17.00512	15.80271	15.91473	15.46054	16.02309
14.29308	17.00754	15.80500	15.92970	15.45549	16.03209
14.28854	17.00128	15.80183	15.93608	15.46111	16.02679
14.29529	16.99824	15.80333	15.92356	15.46300	16.01412
14.30299	17.00465	15.80483	15.91340	15.45585	16.00782
14.30254	17.00419	15.80340	15.92163	15.45958	16.01620
14.29534	17.00386	15.80282	15.93348	15.46360	16.02958
14.28991	16.99734	15.81102	15.93411	15.45796	16.03108
14.29384	17.00239	15.81351	15.91782	15.45783	16.02245
14.30162	17.00601	15.79709	15.91285	15.46210	16.01343
14.30411	16.99960	15.79542	15.92433	15.46427	16.01400
14.29780	16.99855	15.81820	15.93257	15.45604	16.01987
14.28929	17.00524	15.81687	15.92373	15.45758	16.02581
14.29010	17.00481	15.79250	15.91451	15.46347	16.02791
14.30012	16.99874	15.79951	15.92081	15.46373	16.01714
14.30518	16.99984	15.81605	15.93345	15.45600	16.01200
14.29997	17.00227	15.81380	15.93689	15.45875	16.01965
14.29112	17.00794	15.79759	15.92385	15.46456	16.02306
14.28958	17.00153	15.80079	15.91563	15.45722	16.02174
14.29790	16.99626	15.81075	15.92290	15.45818	16.01752
14.30540	17.00739	15.81168	15.92882	15.46460	16.01087

14.30239	17.00823	15.80157	15.92652	15.46186	16.01554
14.29260	17.00261	15.79852	15.91286	15.45385	16.02913
14.28933	16.99707	15.81061	15.91867	15.46149	16.02753
14.29669	17.00494	15.81535	15.93571	15.46328	16.01726
14.30446	17.00745	15.80064	15.93509	15.46083	16.00889
14.30342	16.99851	15.79778	15.92596	15.45637	16.01338
14.29586	17.00560	15.81119	15.92077	15.46202	16.02448
14.28912	17.00206	15.81351	15.92312	15.46544	16.02663
14.29207	17.00251	15.80434	15.92964	15.45842	16.02244
14.30219	17.00376	15.79972	15.92652	15.45613	16.01269
14.30387	16.99962	15.80647	15.91294	15.46336	16.01418
14.29877	17.00199	15.81481	15.91724	15.46291	16.02183
14.29139	17.00291	15.80977	15.92893	15.45756	16.02680
14.29097	17.00591	15.79857	15.92741	15.45639	16.02579
14.29780	16.99686	15.80226	15.92348	15.46676	16.02568
14.30193	16.99928	15.81528	15.92264	15.45884	16.01635
14.29989	17.00438	15.80946	15.92876	15.45280	16.01245
14.29533	16.99845	15.79864	15.93314	15.46661	16.02367
14.29146	17.00168	15.80317	15.92796	15.46347	16.02504
14.29448	17.00084	15.81105	15.91388	15.45046	16.01592
14.30080	17.00278	15.81066	15.91758	15.46251	16.01111
14.30227	17.00204	15.80100	15.93197	15.46431	16.01635
14.29766	17.00255	15.79815	15.92909	15.46220	16.02833
14.29391	17.00020	15.81090	15.91790	15.45221	16.03513
14.29520	17.00182	15.81477	15.91054	15.46337	16.02027
14.29727	17.00754	15.80236	15.91872	15.46562	16.00210
14.30111	16.99736	15.79977	15.93286	15.45854	16.00899
14.30208	17.00209	15.81181	15.92761	15.45684	16.02490
14.29756	17.00579	15.80963	15.91462	15.46496	16.02888
14.29490	17.00323	15.80362	15.91873	15.46329	16.02166
14.29657	17.00149	15.80299	15.92836	15.45692	16.00748
14.29622	17.00155	15.81018	15.92891	15.45961	16.01226
14.29902	17.00625	15.81372	15.91693	15.45978	16.03073
14.30077	17.00120	15.79810	15.91220	15.46551	16.04213
14.29602	17.00323	15.79787	15.92084	15.45815	16.02143
14.29308	17.00064	15.80917	15.93552	15.45529	15.99614
14.29563	17.00253	15.81044	15.92448	15.46564	15.99478
14.29725	17.00836	15.80125	15.90876	15.46632	16.01390
14.29958	17.00109	15.79846	15.91674	15.45496	16.03983
14.30010	17.00121	15.80216	15.93057	15.46023	16.04060
14.29583	17.00270	15.80472	15.92648	15.46827	16.00890
14.29418	17.00736	15.80545	15.91567	15.46259	15.99115
14.29761	16.99999	15.80538	15.91048	15.45708	16.00990
14.29933	16.99992	15.80169	15.91859	15.46805	16.04544
14.30034	17.00728	15.80631	15.93856	15.46439	16.05573
14.29794	16.99974	15.80742	15.93482	15.45815	16.03460
14.29374	17.00268	15.80165	15.91358	15.46130	15.99954
14.29629	17.00315	15.80333	15.91314	15.46638	15.99373
14.30190	17.00416	15.80595	15.92614	15.46006	16.03069
14.30106	17.00336	15.80760	15.92494	15.45823	16.06271
14.29846	17.00418	15.80781	15.91788	15.46359	16.03960
14.29610	17.00554	15.80321	15.92087	15.46792	15.99239
14.29384	17.00247	15.80525	15.92798	15.45948	15.97829
14.29806	17.00900	15.80933	15.93624	15.45466	16.00561
14.30283	17.00333	15.80740	15.93206	15.46765	16.05423
14.30047	17.00180	15.80369	15.90023	15.46631	16.05034
14.29566	17.00717	15.80252	15.89721	15.45610	16.00111

14.29300	17.00431	15.80670	15.93130	15.45488	15.98046
14.29542	17.00145	15.80981	15.94189	15.46694	16.00539
14.30190	17.00104	15.80324	15.92225	15.46322	16.05460
14.30414	17.00645	15.80274	15.90397	15.45485	16.03726
14.29836	16.99934	15.80970	15.91565	15.46526	16.04385
14.29323	17.00226	15.81076	15.95151	15.46256	16.06055
14.29289	17.00157	15.80380	15.94388	15.45835	
14.29865	16.99826	15.80364	15.90842	15.46253	
14.30249	17.00413	15.80979	15.90141	15.46310	
14.29996	17.00047	15.80963	15.92787	15.46208	
14.29481	17.00438	15.80087	15.95375	15.45667	
14.29153	17.00060	15.80357	15.93059	15.46594	
14.29720	17.00608	15.80928	15.89451	15.45948	
14.30382	17.00477	15.80475	15.90548	15.46269	
14.30064	16.99711	15.80532	15.93619	15.45981	
14.29547	17.00486	15.80717	15.92925	15.46317	
14.29498	17.00297	15.80396	15.91865	15.45672	
14.29708	17.00254	15.80654	15.91304	15.46192	
14.30119	17.00259	15.80785	15.91874	15.46550	
14.30133	17.00424	15.80281	15.92336	15.45566	
14.29727	17.00230	15.80389	15.92543	15.46481	
14.29394	17.00122	15.81038	15.92274	15.46055	
14.29486	17.00807	15.80923	15.91969	15.45458	
14.29985	16.99960	15.80292	15.92288	15.46536	
14.30131	17.00273	15.80826	15.92795	15.46409	
14.30102	17.00408	15.81163	15.92535	15.46267	
14.29808	17.00426	15.80626	15.91406	15.46176	
14.29513	17.00478	15.80713	15.90984	15.46585	
14.29513	17.00641	15.80725	15.92344	15.46442	
14.29991	17.00272	15.80705	15.93128	15.45341	
14.30213	16.99705	15.80814		15.46196	
14.30080	17.00495	15.80603		15.46489	
14.29902	17.00917	15.80547		15.45638	
14.29543	16.99740	15.80648		15.46171	
14.29510	16.99959	15.80770		15.46843	
14.29827	17.00757	15.80928		15.45227	
14.30212	17.00281	15.80677		15.45940	
14.30313	16.99771	15.80807		15.46470	
14.29968	17.00674	15.80749		15.45235	
14.29372	17.00200	15.80783		15.45912	
14.29181	16.99778	15.80779		15.46375	
14.29948	17.00403	15.80385		15.46981	
14.30466	17.00261	15.80339		15.46374	
14.30120	17.00254	15.80633		15.45867	
14.29496	17.00416	15.80567		15.47015	
14.29236	17.00337	15.80394		15.46201	
14.29709	17.00236	15.80439		15.46727	
14.30512	17.00857	15.80601		15.45263	
14.30487	17.00332	15.80832		15.46201	
14.29576	16.99580	15.80458		15.47032	
14.29003	17.00728	15.80580		15.46508	
14.29469	17.00565	15.80925		15.45940	
14.30258	17.00082	15.80788		15.46555	
14.30340	17.00186	15.80568		15.46612	
14.29743	17.00530	15.80712		15.45546	
14.29248	17.00576	15.81049		15.46095	
14.29428	17.00383	15.80724		15.46512	

14.30063	17.00495	15.80349	15.46248
14.30440	17.00281	15.80657	15.45490
14.30140	17.00542	15.80866	15.45403
14.29563	17.00315	15.80589	15.46494
14.29515	17.00352	15.80591	15.45753
14.29986	17.01124	15.80635	15.45172
14.30428	17.00286	15.81064	15.45278
14.30518	17.00203	15.80514	15.46714
14.29908	17.00355	15.80397	15.45662
14.29222	17.00899	15.80910	15.45254
14.29645	17.00297	15.80803	15.45231
14.30492	17.00163	15.80181	15.46815
14.30675	17.00477	15.80242	15.44536
14.30018	17.00168	15.80394	15.46480
14.29285	17.00631	15.80764	15.46501
14.29442	17.00101	15.80611	15.46664
14.30281	17.00138	15.80241	15.45706
14.30892	17.00831	15.80283	15.47788
14.30160	17.00289	15.81021	15.47813
14.29203	17.00119	15.80922	15.45094
14.29339	17.00875	15.80263	15.44642
14.30173	17.01285	15.80511	15.46616
14.31056	16.99733	15.80976	15.45787
14.30730	16.99823	15.80885	15.44710
14.29269	17.00786	15.80907	15.45606
14.28937	17.00390	15.80456	15.44871
14.29928	17.00244	15.80429	15.47595
14.30815	16.99529	15.80827	15.44250
14.30856	17.00746	15.80379	15.44243
14.29758	17.00313	15.80683	15.47057
14.28672	17.00171	15.79125	15.46802
14.29228	17.00510	15.80839	15.42476
14.31023	17.00217	15.84149	15.50767
14.31131	17.00476	15.77851	
14.29905	17.00127	15.78934	
14.28842	17.00273	15.83426	
14.28702	17.00654	15.81078	
14.30406	17.01071	15.79179	
14.31541	17.00101	15.81389	
14.30344	16.99942	15.80321	
14.28884	17.01208	15.82343	
14.28681	17.00992	15.81077	
14.29903	17.00223	15.80272	
14.31508	17.00172	15.80150	
14.31049	17.00533	15.82368	
14.28946	17.00639	15.80715	
14.28614	17.00272	15.79589	
14.29998	16.99827	15.81010	
14.30784	17.00029	15.81127	
14.30830	17.00856	15.80652	
14.29769	16.99886	15.80962	
14.28516	16.99683	15.79793	
14.29080	17.00756	15.80696	
14.30945	17.00235	15.82059	
14.30842	17.00211	15.80262	
14.29679	16.99939	15.80354	
14.28794	17.00542	15.80565	

14.28665	17.00788	15.81652
14.30049	17.00385	15.80789
14.31319	17.00292	15.79442
14.30660	17.00590	15.80274
14.28883	17.00560	15.81628
14.28784	16.99820	15.80966
14.29760	17.00431	15.79898
14.30959	17.01341	15.80064
14.30680	17.00696	15.81081
14.29300	16.99978	15.81540
14.28522	17.00292	15.80960
14.29515	17.00629	15.80377
14.31198	17.00596	15.80100
14.31215	17.00512	15.81411
14.29709	17.00293	15.81716
14.28585	17.00571	15.79888
14.29075	17.00219	15.79708
14.30618	17.00345	15.81755
14.31524	17.00875	15.81860
14.30542	17.00219	15.79748
14.28750	16.99750	15.79951
14.28684	17.00095	15.81693
14.29823	17.00585	15.81410
14.30564	17.00413	15.80003
14.30513	16.99982	15.80431
14.29653	16.99909	15.80918
14.28849	17.00228	15.80897
14.29447	17.00729	15.80304
14.30669	16.99630	15.80421
14.30865	17.00383	15.81066
14.29711	17.00542	15.81245
14.28987	16.99380	15.80773
14.29182	17.00378	15.80063
14.30276	17.00605	15.80866
14.30891	17.00425	15.81817
14.30027	17.00103	15.81327
14.29009	17.00987	15.80610
14.29059	17.00457	15.80708
14.29756	16.99289	15.81160
14.30589	17.00435	15.81074
14.30581	17.00667	15.80692
14.29731	16.99996	15.80866
14.28957	16.99550	15.80602
14.29689	16.99918	15.80396
14.30449	17.00481	15.80224
14.30781	16.99792	15.80677
14.30012	16.99354	15.80977
14.29146	16.99472	15.80983
14.28962	17.00639	15.80713
14.30212	17.00646	15.81066
14.30985	16.99131	15.81139
14.30201	16.99777	15.80913
14.28798	17.00667	15.80433
14.28677	17.00198	15.80469
14.29823	16.99258	15.81408
14.31058	17.00153	15.82057
14.30842	16.99727	15.80597

14.28985	17.00351	15.79606
14.28116	17.00264	15.81459
14.29414	17.00894	15.81269
14.31375	17.01238	15.80236
14.31350	17.00185	15.80082
14.29681	17.01109	15.80532
14.28492	17.01642	15.80578
14.29323	17.01047	15.81068
14.31014	16.99916	15.80779
14.31427	17.00532	15.80137
14.29937	17.01064	15.80431
14.28169	17.01808	15.81218
14.28168	16.99927	15.81248
14.30710	16.98857	15.80664
14.31868	17.02146	15.81257
14.30659	17.03538	15.82990
14.28742	17.08706	15.82023
14.27943		15.80936
14.29483		15.81562
14.31505		15.82230
14.31128		15.81979
14.28868		15.80782
14.28213		15.80273
14.29413		15.81219
14.30941		15.81586
14.30725		15.80172
14.29638		15.79845
14.28536		15.80918
14.29082		15.80733
14.30657		15.80497
14.30967		15.81072
14.30128		15.80981
14.28855		15.81259
14.28555		15.79842
14.29839		15.79792
14.31071		15.81111
14.30769		15.80865
14.29501		15.81143
14.28707		15.81500
14.29528		15.80718
14.31234		15.79953
14.31184		15.78937
14.29189		15.79866
14.28336		15.80440
14.28811		15.79508
14.30554		15.79345
14.31618		15.80440
14.30258		15.80273
14.28624		15.79763
14.28778		15.80665
14.30215		15.81831
14.31412		15.80741
14.30535		15.81016
14.28626		15.82423
14.28019		15.83356
14.29424		15.84055
14.31483		15.79308

14.31814	15.83240
14.29846	
14.27577	
14.28547	
14.30480	
14.31223	
14.29863	
14.27918	
14.27962	
14.30416	
14.31754	
14.30561	
14.28368	
14.27743	
14.29157	
14.30687	
14.30885	
14.29608	
14.28548	
14.29094	
14.29923	
14.30412	
14.30262	
14.29535	
14.29236	
14.30537	
14.31097	
14.30465	
14.29991	
14.29105	
14.29315	
14.30772	
14.30973	
14.30023	
14.29406	
14.28889	
14.29180	
14.30115	
14.30984	
14.31062	
14.29894	
14.28778	
14.28903	
14.29724	
14.29587	
14.32106	
14.32873	

APPENDIX E

TEST SPECIMEN DATA

The information shown below is the pertinent data collected from the physical test specimen.

Time Stamp	Load Cells (*pounds*)										LVDTs (*inches*)		Strain Gage
	L101	L102	L1	L2	L3	L4	L5	L6	L7	L8	LVDT 1	LVDT 2	S6
36:24.5	-0.6	8.3	-14000.0	14000.0	14000.0	-14000.0	14100.0	13900.0	-14000.0	14000.0	0.000	0.000	0.00002
36:37.6	0.9	5.4	-14000.0	14000.0	14000.0	-14000.0	14100.0	13900.0	-14000.0	14000.0	0.000	0.000	0.00002
36:50.8	-0.5	6.2	-14000.0	14000.0	14000.0	-14000.0	14100.0	13900.0	-14000.0	14000.0	0.000	0.000	0.00003
37:04.0	0.2	5.4	-14000.0	14000.0	14000.0	-14000.0	14100.0	13900.0	-14000.0	14000.0	0.000	0.000	0.00003
37:17.2	1.3	7.0	-14000.0	14000.0	14000.0	-14000.0	14100.0	13900.0	-14000.0	14000.0	0.000	0.000	0.00003
37:30.3	-0.2	6.0	-14000.0	13900.0	14000.0	-14000.0	14100.0	13900.0	-14000.0	14000.0	0.000	0.000	0.00003
37:43.5	0.6	7.4	-14000.0	13900.0	14000.0	-14000.0	14100.0	13900.0	-14000.0	14000.0	0.000	0.000	0.00003
37:56.6	-1.1	6.4	-14000.0	14000.0	14000.0	-14000.0	14100.0	13900.0	-14000.0	14000.0	0.000	0.000	0.00003
38:09.8	203.0	4.1	-14100.0	14000.0	14000.0	-14000.0	14000.0	13900.0	-13900.0	14000.0	-0.033	0.035	0.00004
38:23.0	204.0	4.6	-14100.0	14000.0	14000.0	-14000.0	14000.0	13900.0	-13900.0	14000.0	-0.034	0.036	0.00004
38:36.2	223.0	4.8	-14100.0	14000.0	14000.0	-14000.0	14000.0	13900.0	-13900.0	14000.0	-0.069	0.071	0.00004
38:49.3	383.0	4.0	-14100.0	14000.0	14000.0	-14000.0	14000.0	13900.0	-13900.0	13900.0	-0.185	0.188	0.00005
39:02.5	369.0	4.2	-14100.0	14000.0	14000.0	-14000.0	14000.0	13900.0	-13900.0	14000.0	-0.185	0.188	0.00005
39:15.7	381.0	2.5	-14100.0	14000.0	14000.0	-14000.0	14000.0	13900.0	-13900.0	13900.0	-0.188	0.191	0.00005
39:28.9	438.0	2.6	-14100.0	14000.0	14000.0	-14000.0	14000.0	13800.0	-13900.0	13900.0	-0.202	0.204	0.00005
39:42.0	489.0	3.4	-14100.0	14000.0	14000.0	-14100.0	14000.0	13800.0	-13900.0	13900.0	-0.223	0.225	0.00005
39:55.2	517.0	3.3	-14100.0	14000.0	14000.0	-14100.0	14000.0	13800.0	-13900.0	13900.0	-0.237	0.239	0.00006
40:08.4	583.0	2.9	-14100.0	14100.0	14000.0	-14100.0	14000.0	13800.0	-13900.0	13900.0	-0.252	0.254	0.00006

40:21.5	651.0	2.8	-14100.0	14100.0	14000.0	-14100.0	14000.0	13800.0	-13900.0	13900.0	-0.270	0.270	0.00006
40:34.7	722.0	3.2	-14200.0	14100.0	14100.0	-14100.0	14000.0	13800.0	-13900.0	13900.0	-0.288	0.288	0.00007
40:47.8	736.0	1.2	-14200.0	14100.0	14100.0	-14100.0	14000.0	13800.0	-13800.0	13900.0	-0.295	0.295	0.00007
41:01.0	728.0	2.4	-14200.0	14100.0	14100.0	-14100.0	14000.0	13800.0	-13800.0	13900.0	-0.295	0.295	0.00007
41:14.2	725.0	2.2	-14200.0	14100.0	14100.0	-14100.0	14000.0	13800.0	-13800.0	13900.0	-0.295	0.295	0.00007
41:27.3	761.0	1.1	-14200.0	14100.0	14100.0	-14100.0	14000.0	13800.0	-13800.0	13900.0	-0.303	0.302	0.00007
41:40.5	776.0	0.0	-14200.0	14100.0	14100.0	-14100.0	14000.0	13800.0	-13800.0	13900.0	-0.306	0.305	0.00007
41:53.7	772.0	1.3	-14200.0	14100.0	14100.0	-14100.0	14000.0	13800.0	-13800.0	13900.0	-0.306	0.305	0.00007
42:06.8	767.0	0.3	-14200.0	14100.0	14100.0	-14100.0	14000.0	13800.0	-13800.0	13900.0	-0.306	0.305	0.00007
42:20.0	764.0	1.9	-14200.0	14100.0	14100.0	-14100.0	14000.0	13800.0	-13800.0	13900.0	-0.306	0.305	0.00007
42:33.1	762.0	0.8	-14200.0	14100.0	14100.0	-14100.0	14000.0	13800.0	-13800.0	13900.0	-0.306	0.305	0.00008
42:46.3	762.0	0.7	-14200.0	14100.0	14100.0	-14100.0	14000.0	13800.0	-13800.0	13900.0	-0.306	0.305	0.00007
42:59.5	759.0	0.4	-14200.0	14100.0	14100.0	-14100.0	14000.0	13800.0	-13800.0	13900.0	-0.306	0.305	0.00007
43:12.6	757.0	0.6	-14200.0	14100.0	14100.0	-14100.0	14000.0	13800.0	-13800.0	13900.0	-0.306	0.305	0.00007
43:25.8	757.0	1.8	-14200.0	14100.0	14100.0	-14100.0	14000.0	13800.0	-13800.0	13900.0	-0.306	0.305	0.00008
43:39.0	491.0	0.7	-14100.0	14100.0	14000.0	-14100.0	14000.0	13800.0	-13900.0	13900.0	-0.256	0.273	0.00004
43:52.1	40.6	1.8	-14100.0	14000.0	14000.0	-14000.0	14100.0	13900.0	-13900.0	14000.0	-0.250	0.246	0.00004
44:05.3	37.7	0.6	-14100.0	14000.0	14000.0	-14000.0	14100.0	13900.0	-13900.0	14000.0	-0.250	0.246	0.00004
44:18.5	39.3	0.2	-14100.0	14000.0	14000.0	-14000.0	14100.0	13900.0	-13900.0	14000.0	-0.250	0.246	0.00005
44:31.6	37.7	1.0	-14100.0	14000.0	14000.0	-14000.0	14100.0	13900.0	-13900.0	14000.0	-0.250	0.246	0.00005
44:44.8	38.8	0.7	-14100.0	14000.0	14000.0	-14000.0	14100.0	13900.0	-13900.0	14000.0	-0.250	0.246	0.00005
44:57.9	39.6	1.9	-14100.0	14000.0	14000.0	-14000.0	14100.0	13900.0	-13900.0	14000.0	-0.250	0.246	0.00004
45:11.1	39.3	0.3	-14100.0	14000.0	14000.0	-14000.0	14100.0	13900.0	-13900.0	14000.0	-0.250	0.246	0.00005
45:24.3	38.5	1.4	-14100.0	14000.0	14000.0	-14000.0	14100.0	13900.0	-13900.0	14000.0	-0.250	0.246	0.00005
45:37.4	38.5	-0.2	-14100.0	14000.0	14000.0	-14000.0	14100.0	13900.0	-13900.0	14000.0	-0.249	0.246	0.00004

45:50.6	38.7	0.8	-14100.0	14000.0	14000.0	-14000.0	14100.0	13900.0	-13900.0	14000.0	-0.249	0.246	0.00004
46:03.8	35.2	-0.6	-14100.0	14000.0	14000.0	-14000.0	14100.0	13900.0	-13900.0	14000.0	-0.249	0.246	0.00004
46:16.9	37.4	1.1	-14100.0	14000.0	14000.0	-14000.0	14100.0	13900.0	-13900.0	14000.0	-0.250	0.246	0.00005
46:30.1	36.9	0.8	-14100.0	14000.0	14000.0	-14000.0	14100.0	13900.0	-13900.0	14000.0	-0.249	0.246	0.00004
46:43.2	37.8	-0.3	-14100.0	14000.0	14000.0	-14000.0	14100.0	13900.0	-13900.0	14000.0	-0.250	0.246	0.00004
46:56.4	38.7	-0.8	-14100.0	14000.0	14000.0	-14000.0	14100.0	13900.0	-13900.0	14000.0	-0.249	0.245	0.00003
47:09.6	39.3	128.0	-14000.0	14000.0	13900.0	-14000.0	14100.0	13900.0	-14000.0	14000.0	-0.168	0.169	0.00003
47:22.7	38.7	163.0	-14000.0	13900.0	13900.0	-14000.0	14100.0	14000.0	-14000.0	14000.0	-0.126	0.128	0.00003
47:35.9	38.3	187.0	-14000.0	13900.0	13900.0	-14000.0	14100.0	14000.0	-14000.0	14000.0	-0.071	0.073	0.00003
47:49.1	37.6	232.0	-14000.0	13900.0	13900.0	-14000.0	14100.0	14000.0	-14000.0	14000.0	-0.015	0.017	0.00003
48:02.3	39.1	310.0	-14000.0	13900.0	13900.0	-14000.0	14100.0	14000.0	-14000.0	14000.0	0.041	-0.039	0.00003
48:15.5	38.5	215.0	-14000.0	13900.0	13900.0	-14000.0	14100.0	14000.0	-14000.0	14000.0	0.106	-0.112	0.00003
48:28.6	37.8	343.0	-14000.0	13900.0	13900.0	-14000.0	14100.0	14000.0	-14000.0	14000.0	0.162	-0.171	0.00002
48:41.9	38.1	491.0	-14000.0	13900.0	13900.0	-13900.0	14200.0	14000.0	-14100.0	14100.0	0.217	-0.226	0.00001
48:55.0	39.2	594.0	-13900.0	13800.0	13800.0	-13900.0	14200.0	14100.0	-14100.0	14100.0	0.274	-0.286	0.00000
49:08.2	37.4	704.0	-13900.0	13800.0	13800.0	-13900.0	14200.0	14100.0	-14100.0	14100.0	0.303	-0.317	0.00000
49:21.4	38.6	690.0	-13900.0	13800.0	13800.0	-13900.0	14200.0	14100.0	-14100.0	14100.0	0.303	-0.317	0.00000
49:34.5	37.8	681.0	-13900.0	13800.0	13800.0	-13900.0	14200.0	14100.0	-14100.0	14100.0	0.303	-0.317	0.00000
49:47.7	37.7	678.0	-13900.0	13800.0	13800.0	-13900.0	14200.0	14100.0	-14100.0	14100.0	0.303	-0.317	0.00000
50:00.9	37.5	675.0	-13900.0	13800.0	13800.0	-13900.0	14200.0	14100.0	-14100.0	14100.0	0.260	-0.293	0.00004
50:14.0	38.0	-7.5	-14000.0	14000.0	13900.0	-14000.0	14100.0	13900.0	-14000.0	14000.0	0.227	-0.231	0.00004
50:27.2	37.9	-5.4	-14000.0	14000.0	13900.0	-14000.0	14100.0	13900.0	-13900.0	14000.0	0.093	-0.093	0.00006
50:40.4	310.0	-5.4	-14100.0	14000.0	14000.0	-14000.0	14000.0	13900.0	-13900.0	14000.0	0.020	-0.017	0.00006
50:53.6	376.0	-4.1	-14100.0	14000.0	14000.0	-14000.0	14000.0	13900.0	-13900.0	13900.0	-0.052	0.057	0.00007
51:06.8	486.0	-4.7	-14100.0	14100.0	14000.0	-14100.0	14000.0	13800.0	-13900.0	13900.0	-0.123	0.128	0.00007

51:20.0	367.0	-4.4	-14100.0	14000.0	14000.0	-14100.0	14000.0	13900.0	-13900.0	13900.0	-0.205	0.205	0.00007
51:33.2	596.0	-4.3	-14100.0	14100.0	14000.0	-14100.0	14000.0	13800.0	-13900.0	13900.0	-0.271	0.271	0.00009
51:46.3	707.0	-4.2	-14100.0	14100.0	14100.0	-14100.0	14000.0	13800.0	-13900.0	13900.0	-0.296	0.295	0.00009
51:59.5	778.0	-5.7	-14200.0	14100.0	14100.0	-14100.0	14000.0	13800.0	-13800.0	13900.0	-0.313	0.311	0.00009
52:12.7	769.0	-3.0	-14200.0	14100.0	14100.0	-14100.0	14000.0	13800.0	-13800.0	13900.0	-0.313	0.311	0.00008
52:25.8	763.0	-4.1	-14200.0	14100.0	14100.0	-14100.0	14000.0	13800.0	-13800.0	13900.0	-0.313	0.311	0.00009
52:39.0	760.0	-5.1	-14200.0	14100.0	14100.0	-14100.0	14000.0	13800.0	-13800.0	13900.0	-0.313	0.311	0.00008
52:52.1	38.1	-5.8	-14100.0	14000.0	14000.0	-14000.0	14100.0	13900.0	-13900.0	14000.0	-0.253	0.250	0.00006
53:05.3	38.7	-5.6	-14100.0	14000.0	14000.0	-14000.0	14100.0	13900.0	-14000.0	14000.0	-0.175	0.177	0.00004
53:18.5	40.3	170.0	-14000.0	13900.0	13900.0	-14000.0	14100.0	14000.0	-14000.0	14000.0	-0.103	0.105	0.00004
53:31.6	38.7	218.0	-14000.0	13900.0	13900.0	-14000.0	14100.0	14000.0	-14000.0	14000.0	-0.032	0.032	0.00004
53:44.8	38.3	205.0	-14000.0	13900.0	13900.0	-14000.0	14100.0	14000.0	-14000.0	14000.0	0.041	-0.045	0.00003
53:58.0	39.5	286.0	-14000.0	13900.0	13900.0	-14000.0	14100.0	14000.0	-14000.0	14000.0	0.112	-0.119	0.00003
54:11.2	38.8	371.0	-14000.0	13900.0	13900.0	-13900.0	14100.0	14000.0	-14000.0	14000.0	0.181	-0.191	0.00002
54:24.5	39.1	398.0	-14000.0	13900.0	13900.0	-13900.0	14100.0	14000.0	-14000.0	14000.0	0.194	-0.205	0.00002
54:37.6	39.0	540.0	-13900.0	13800.0	13800.0	-13900.0	14200.0	14100.0	-14100.0	14100.0	0.262	-0.274	0.00000
54:50.8	38.3	729.0	-13900.0	13800.0	13800.0	-13800.0	14200.0	14100.0	-14100.0	14100.0	0.315	-0.330	0.00000
55:04.0	39.0	721.0	-13900.0	13800.0	13800.0	-13900.0	14200.0	14100.0	-14100.0	14100.0	0.316	-0.330	0.00000
55:17.1	38.0	713.0	-13900.0	13800.0	13800.0	-13900.0	14200.0	14100.0	-14100.0	14100.0	0.316	-0.330	0.00000
55:30.3	37.9	709.0	-13900.0	13800.0	13800.0	-13900.0	14200.0	14100.0	-14100.0	14100.0	0.316	-0.330	0.00000
55:43.5	40.0	706.0	-13900.0	13800.0	13800.0	-13900.0	14200.0	14100.0	-14100.0	14100.0	0.316	-0.330	0.00000
55:56.6	38.7	702.0	-13900.0	13800.0	13800.0	-13900.0	14200.0	14100.0	-14100.0	14100.0	0.316	-0.330	0.00000
56:09.8	39.3	700.0	-13900.0	13800.0	13800.0	-13900.0	14200.0	14100.0	-14100.0	14100.0	0.316	-0.330	0.00000
56:23.0	39.1	697.0	-13900.0	13800.0	13800.0	-13900.0	14200.0	14100.0	-14100.0	14100.0	0.316	-0.330	0.00000
56:36.1	37.7	695.0	-13900.0	13800.0	13800.0	-13900.0	14200.0	14100.0	-14100.0	14100.0	0.316	-0.330	0.00000

56:49.3	39.6	689.0	-13900.0	13800.0	13800.0	-13900.0	14200.0	14100.0	-14100.0	14100.0	0.316	-0.330	0.00000
57:02.5	38.7	686.0	-13900.0	13800.0	13800.0	-13900.0	14200.0	14100.0	-14100.0	14100.0	0.316	-0.330	0.00000
57:15.6	37.1	681.0	-13900.0	13800.0	13800.0	-13900.0	14200.0	14100.0	-14100.0	14100.0	0.316	-0.330	0.00000
57:28.8	37.7	679.0	-13900.0	13800.0	13800.0	-13900.0	14200.0	14100.0	-14100.0	14100.0	0.316	-0.330	0.00000
57:41.9	38.3	675.0	-13900.0	13800.0	13800.0	-13900.0	14200.0	14100.0	-14100.0	14100.0	0.316	-0.330	0.00000
57:55.1	39.0	670.0	-13900.0	13800.0	13800.0	-13900.0	14200.0	14100.0	-14100.0	14100.0	0.316	-0.330	0.00000
58:08.3	38.5	658.0	-13900.0	13800.0	13800.0	-13900.0	14200.0	14100.0	-14100.0	14100.0	0.316	-0.330	0.00000
58:21.4	38.1	654.0	-13900.0	13800.0	13800.0	-13900.0	14200.0	14100.0	-14100.0	14100.0	0.316	-0.330	0.00000
58:34.6	38.5	648.0	-13900.0	13800.0	13800.0	-13900.0	14200.0	14100.0	-14100.0	14100.0	0.316	-0.330	0.00000
58:47.8	38.1	645.0	-13900.0	13800.0	13800.0	-13900.0	14200.0	14100.0	-14100.0	14100.0	0.316	-0.330	0.00000
59:00.9	37.6	640.0	-13900.0	13800.0	13800.0	-13900.0	14200.0	14100.0	-14100.0	14100.0	0.316	-0.330	-0.00001
59:14.1	38.5	637.0	-13900.0	13800.0	13800.0	-13900.0	14200.0	14100.0	-14100.0	14100.0	0.316	-0.330	0.00000
59:27.2	37.6	633.0	-13900.0	13800.0	13800.0	-13900.0	14200.0	14100.0	-14100.0	14100.0	0.316	-0.329	0.00002
59:40.4	37.7	-10.6	-14000.0	14000.0	13900.0	-14000.0	14100.0	13900.0	-14000.0	14000.0	0.234	-0.237	0.00004
59:53.6	402.0	-6.5	-14100.0	14000.0	14000.0	-14000.0	14000.0	13900.0	-13900.0	13900.0	-0.053	0.059	0.00006
00:06.9	461.0	-6.9	-14100.0	14000.0	14000.0	-14100.0	14000.0	13800.0	-13900.0	13900.0	-0.129	0.134	0.00007
00:20.1	401.0	-8.9	-14100.0	14000.0	14000.0	-14100.0	14000.0	13900.0	-13900.0	13900.0	-0.212	0.214	0.00007
00:33.3	549.0	-5.2	-14100.0	14100.0	14000.0	-14100.0	14000.0	13800.0	-13900.0	13900.0	-0.269	0.269	0.00006
00:46.4	39.5	-7.7	-14000.0	14000.0	14000.0	-14000.0	14100.0	13900.0	-13900.0	14000.0	-0.235	0.232	0.00006
00:59.6	353.0	-6.4	-14100.0	14000.0	14000.0	-14100.0	14000.0	13900.0	-13900.0	13900.0	-0.272	0.270	0.00007
01:12.8	581.0	-6.9	-14100.0	14100.0	14000.0	-14100.0	14000.0	13800.0	-13900.0	13900.0	-0.287	0.286	0.00008
01:25.9	687.0	-6.2	-14100.0	14100.0	14100.0	-14100.0	14000.0	13800.0	-13900.0	13900.0	-0.308	0.307	0.00007
01:39.1	679.0	-7.5	-14100.0	14100.0	14100.0	-14100.0	14000.0	13800.0	-13900.0	13900.0	-0.308	0.307	0.00008
01:52.2	676.0	-6.8	-14100.0	14100.0	14100.0	-14100.0	14000.0	13800.0	-13900.0	13900.0	-0.308	0.307	0.00007
02:05.4	675.0	-6.4	-14100.0	14100.0	14100.0	-14100.0	14000.0	13800.0	-13900.0	13900.0	-0.308	0.307	0.00008

02:18.6	328.0	-7.3	-14100.0	14000.0	14000.0	-14000.0	14100.0	13900.0	-13900.0	14000.0	-0.259	0.255	0.00005
02:31.7	38.5	-6.7	-14000.0	14000.0	14000.0	-14000.0	14100.0	13900.0	-13900.0	14000.0	-0.258	0.253	0.00005
02:44.9	39.7	194.0	-14000.0	13900.0	13900.0	-14000.0	14100.0	14000.0	-14000.0	14000.0	-0.019	0.016	0.00004
02:58.1	40.5	222.0	-14000.0	13900.0	13900.0	-14000.0	14100.0	14000.0	-14000.0	14000.0	0.061	-0.067	0.00003
03:11.3	38.9	316.0	-14000.0	13900.0	13900.0	-14000.0	14100.0	14000.0	-14000.0	14000.0	0.139	-0.148	0.00002
03:24.5	39.4	412.0	-14000.0	13900.0	13900.0	-13900.0	14100.0	14000.0	-14000.0	14100.0	0.210	-0.222	0.00001
03:37.7	38.5	590.0	-13900.0	13800.0	13800.0	-13900.0	14200.0	14100.0	-14100.0	14100.0	0.283	-0.297	0.00000
03:50.9	39.7	699.0	-13900.0	13800.0	13800.0	-13900.0	14200.0	14100.0	-14100.0	14100.0	0.304	-0.320	0.00000
04:04.1	38.6	690.0	-13900.0	13800.0	13800.0	-13900.0	14200.0	14100.0	-14100.0	14100.0	0.304	-0.320	0.00000
04:17.2	38.7	684.0	-13900.0	13800.0	13800.0	-13900.0	14200.0	14100.0	-14100.0	14100.0	0.304	-0.320	0.00000
04:30.4	37.2	680.0	-13900.0	13800.0	13800.0	-13900.0	14200.0	14100.0	-14100.0	14100.0	0.304	-0.320	0.00000
04:43.5	38.4	675.0	-13900.0	13800.0	13800.0	-13900.0	14200.0	14100.0	-14100.0	14100.0	0.304	-0.320	0.00004
04:56.7	39.8	-7.6	-14000.0	14000.0	13900.0	-14000.0	14100.0	13900.0	-14000.0	14000.0	0.227	-0.231	0.00004
05:09.9	37.0	-7.6	-14000.0	14000.0	13900.0	-14000.0	14100.0	13900.0	-14000.0	14000.0	0.226	-0.230	0.00004
05:23.0	344.0	-5.9	-14100.0	14000.0	14000.0	-14000.0	14000.0	13900.0	-13900.0	14000.0	-0.054	0.059	0.00006
05:36.3	478.0	-6.7	-14100.0	14100.0	14000.0	-14100.0	14000.0	13800.0	-13900.0	13900.0	-0.152	0.156	0.00006
05:49.5	448.0	-7.0	-14100.0	14100.0	14000.0	-14100.0	14000.0	13800.0	-13900.0	13900.0	-0.259	0.257	0.00008
06:02.7	836.0	-7.2	-14200.0	14100.0	14100.0	-14100.0	13900.0	13800.0	-13800.0	13900.0	-0.327	0.325	0.00009
06:15.9	811.0	-6.4	-14200.0	14100.0	14100.0	-14100.0	13900.0	13800.0	-13800.0	13900.0	-0.327	0.325	0.00009
06:29.0	803.0	-5.6	-14200.0	14100.0	14100.0	-14100.0	14000.0	13800.0	-13800.0	13900.0	-0.327	0.325	0.00009
06:42.2	797.0	-6.4	-14200.0	14100.0	14100.0	-14100.0	14000.0	13800.0	-13800.0	13900.0	-0.327	0.325	0.00009
06:55.3	792.0	-3.8	-14200.0	14100.0	14100.0	-14100.0	14000.0	13800.0	-13800.0	13900.0	-0.327	0.325	0.00005
07:08.5	38.7	-7.1	-14000.0	14000.0	14000.0	-14000.0	14100.0	13900.0	-13900.0	14000.0	-0.266	0.261	0.00005
07:21.7	38.7	-6.6	-14000.0	14000.0	14000.0	-14000.0	14100.0	13900.0	-13900.0	14000.0	-0.266	0.260	0.00005
07:34.8	39.1	6.8	-14000.0	14000.0	14000.0	-14000.0	14100.0	13900.0	-14000.0	14000.0	-0.244	0.241	0.00004

07:48.0	39.2	151.0	-14000.0	13900.0	13900.0	-14000.0	14100.0	14000.0	-14000.0	14000.0	-0.147	0.148	0.00003
08:01.2	38.6	190.0	-14000.0	13900.0	13900.0	-14000.0	14100.0	14000.0	-14000.0	14000.0	-0.048	0.046	0.00003
08:14.3	38.4	240.0	-14000.0	13900.0	13900.0	-14000.0	14100.0	14000.0	-14000.0	14000.0	0.050	-0.057	0.00003
08:27.5	38.6	340.0	-14000.0	13900.0	13900.0	-13900.0	14100.0	14000.0	-14000.0	14000.0	0.146	-0.156	0.00002
08:41.1	40.1	477.0	-14000.0	13900.0	13900.0	-13900.0	14200.0	14000.0	-14100.0	14100.0	0.243	-0.256	0.00000
08:54.3	38.7	737.0	-13900.0	13800.0	13800.0	-13800.0	14200.0	14100.0	-14100.0	14100.0	0.312	-0.329	-0.00001
09:07.5	37.5	714.0	-13900.0	13800.0	13800.0	-13800.0	14200.0	14100.0	-14100.0	14100.0	0.312	-0.329	-0.00001
09:20.7	37.9	708.0	-13900.0	13800.0	13800.0	-13800.0	14200.0	14100.0	-14100.0	14100.0	0.312	-0.329	0.00000
09:33.8	37.7	705.0	-13900.0	13800.0	13800.0	-13800.0	14200.0	14100.0	-14100.0	14100.0	0.312	-0.329	0.00000
09:47.0	39.4	698.0	-13900.0	13800.0	13800.0	-13900.0	14200.0	14100.0	-14100.0	14100.0	0.312	-0.329	0.00000
10:00.1	38.5	694.0	-13900.0	13800.0	13800.0	-13900.0	14200.0	14100.0	-14100.0	14100.0	0.312	-0.329	0.00004
10:13.3	38.2	-7.5	-14000.0	14000.0	13900.0	-14000.0	14100.0	13900.0	-14000.0	14000.0	0.229	-0.234	0.00004
10:26.5	38.8	-7.3	-14000.0	14000.0	13900.0	-14000.0	14100.0	13900.0	-14000.0	14000.0	0.229	-0.234	0.00004
10:39.7	38.9	-5.8	-14000.0	14000.0	13900.0	-14000.0	14100.0	13900.0	-14000.0	14000.0	0.218	-0.224	0.00004
10:52.8	236.0	-4.9	-14100.0	14000.0	14000.0	-14000.0	14000.0	13900.0	-13900.0	14000.0	0.121	-0.123	0.00005
11:06.0	298.0	-4.8	-14100.0	14000.0	14000.0	-14000.0	14000.0	13900.0	-13900.0	14000.0	0.014	-0.013	0.00005
11:19.3	391.0	-4.9	-14100.0	14000.0	14000.0	-14000.0	14000.0	13900.0	-13900.0	13900.0	-0.091	0.095	0.00006
11:32.5	438.0	-6.9	-14100.0	14000.0	14000.0	-14100.0	14000.0	13900.0	-13900.0	14000.0	-0.201	0.201	0.00006
11:45.7	596.0	-6.1	-14100.0	14100.0	14000.0	-14100.0	14000.0	13800.0	-13900.0	13900.0	-0.287	0.285	0.00008
11:58.8	698.0	-6.1	-14100.0	14100.0	14100.0	-14100.0	14000.0	13800.0	-13900.0	13900.0	-0.304	0.302	0.00007
12:12.0	688.0	-7.2	-14100.0	14100.0	14100.0	-14100.0	14000.0	13800.0	-13900.0	13900.0	-0.304	0.302	0.00007
12:25.2	685.0	-6.4	-14100.0	14100.0	14100.0	-14100.0	14000.0	13800.0	-13900.0	13900.0	-0.304	0.302	0.00007
12:38.3	681.0	-5.3	-14100.0	14100.0	14100.0	-14100.0	14000.0	13800.0	-13900.0	13900.0	-0.304	0.302	0.00007
12:51.5	679.0	-7.5	-14100.0	14100.0	14100.0	-14100.0	14000.0	13800.0	-13900.0	13900.0	-0.304	0.302	0.00007
13:04.6	675.0	-5.2	-14100.0	14100.0	14100.0	-14100.0	14000.0	13800.0	-13900.0	13900.0	-0.304	0.302	0.00004

13:17.8	39.1	-6.4	-14000.0	14000.0	14000.0	-14000.0	14100.0	13900.0	-13900.0	14000.0	-0.254	0.249	0.00004
13:31.0	38.9	-7.0	-14000.0	14000.0	14000.0	-14000.0	14100.0	13900.0	-13900.0	14000.0	-0.254	0.248	0.00004
13:44.1	39.6	-6.6	-14000.0	14000.0	14000.0	-14000.0	14100.0	13900.0	-13900.0	14000.0	-0.254	0.248	0.00004
13:57.3	38.8	168.0	-14000.0	13900.0	13900.0	-14000.0	14100.0	14000.0	-14000.0	14000.0	-0.065	0.064	0.00003
14:10.5	38.6	214.0	-14000.0	13900.0	13900.0	-14000.0	14100.0	14000.0	-14000.0	14000.0	0.037	-0.043	0.00003
14:23.7	38.6	310.0	-14000.0	13900.0	13900.0	-14000.0	14100.0	14000.0	-14000.0	14000.0	0.137	-0.147	0.00002
14:37.0	37.9	449.0	-14000.0	13900.0	13900.0	-13900.0	14200.0	14000.0	-14100.0	14100.0	0.235	-0.248	0.00001
14:50.2	40.9	644.0	-13900.0	13800.0	13800.0	-13900.0	14200.0	14100.0	-14100.0	14100.0	0.288	-0.305	-0.00001
15:03.4	39.4	710.0	-13900.0	13800.0	13800.0	-13900.0	14200.0	14100.0	-14100.0	14100.0	0.309	-0.327	0.00000
15:16.6	40.2	702.0	-13900.0	13800.0	13800.0	-13900.0	14200.0	14100.0	-14100.0	14100.0	0.309	-0.327	0.00000
15:29.7	38.4	695.0	-13900.0	13800.0	13800.0	-13900.0	14200.0	14100.0	-14100.0	14100.0	0.309	-0.327	0.00000
15:42.9	39.1	688.0	-13900.0	13800.0	13800.0	-13900.0	14200.0	14100.0	-14100.0	14100.0	0.309	-0.327	0.00004
15:56.0	39.3	-9.5	-14000.0	14000.0	13900.0	-14000.0	14100.0	13900.0	-14000.0	14000.0	0.228	-0.233	0.00004
16:09.3	39.0	-8.0	-14000.0	14000.0	14000.0	-14000.0	14000.0	13900.0	-13900.0	14000.0	-0.004	0.010	0.00005
16:22.5	393.0	-7.0	-14100.0	14000.0	14000.0	-14100.0	14000.0	13900.0	-13900.0	13900.0	-0.108	0.112	0.00006
16:35.7	425.0	-8.2	-14100.0	14000.0	14000.0	-14100.0	14000.0	13800.0	-13900.0	13900.0	-0.219	0.218	0.00007
16:48.9	611.0	-8.1	-14100.0	14100.0	14000.0	-14100.0	14000.0	13800.0	-13900.0	13900.0	-0.286	0.284	0.00008
17:02.1	744.0	-7.8	-14200.0	14100.0	14100.0	-14100.0	14000.0	13800.0	-13800.0	13900.0	-0.310	0.308	0.00008
17:15.2	721.0	-6.2	-14100.0	14100.0	14100.0	-14100.0	14000.0	13800.0	-13800.0	13900.0	-0.310	0.308	0.00008
17:28.4	715.0	-7.2	-14100.0	14100.0	14100.0	-14100.0	14000.0	13800.0	-13800.0	13900.0	-0.310	0.308	0.00008
17:41.6	710.0	-7.6	-14100.0	14100.0	14100.0	-14100.0	14000.0	13800.0	-13900.0	13900.0	-0.310	0.308	0.00008
17:54.7	706.0	-9.1	-14100.0	14100.0	14100.0	-14100.0	14000.0	13800.0	-13900.0	13900.0	-0.310	0.308	0.00008
18:07.9	704.0	-7.5	-14100.0	14100.0	14000.0	-14000.0	14100.0	13900.0	-13900.0	14000.0	-0.258	0.254	0.00004
18:21.1	40.4	-8.1	-14100.0	14000.0	14000.0	-14000.0	14100.0	13900.0	-13900.0	14000.0	-0.257	0.252	0.00004
18:34.2	39.1	182.0	-14000.0	13900.0	13900.0	-14000.0	14100.0	14000.0	-14000.0	14000.0	-0.082	0.082	0.00003

18:47.4	39.7	207.0	-14000.0	13900.0	13900.0	-14000.0	14100.0	14000.0	-14000.0	14000.0	0.022	-0.027	0.00003
19:00.6	39.8	291.0	-14000.0	13900.0	13900.0	-14000.0	14100.0	14000.0	-14000.0	14000.0	0.123	-0.132	0.00002
19:13.7	39.3	423.0	-14000.0	13900.0	13900.0	-13900.0	14100.0	14000.0	-14000.0	14100.0	0.223	-0.236	0.00001
19:27.0	39.4	642.0	-13900.0	13800.0	13800.0	-13900.0	14200.0	14100.0	-14100.0	14100.0	0.296	-0.312	-0.00001
19:40.2	38.4	688.0	-13900.0	13800.0	13800.0	-13900.0	14200.0	14100.0	-14100.0	14100.0	0.305	-0.322	0.00000
19:53.4	39.4	680.0	-13900.0	13800.0	13800.0	-13900.0	14200.0	14100.0	-14100.0	14100.0	0.305	-0.322	0.00000
20:06.5	39.1	673.0	-13900.0	13800.0	13800.0	-13900.0	14200.0	14100.0	-14100.0	14100.0	0.305	-0.322	0.00000
20:19.7	39.9	666.0	-13900.0	13800.0	13800.0	-13900.0	14200.0	14100.0	-14100.0	14100.0	0.305	-0.322	-0.00001
20:32.9	38.6	658.0	-13900.0	13800.0	13800.0	-13900.0	14200.0	14100.0	-14100.0	14100.0	0.305	-0.322	-0.00001
20:46.0	38.7	655.0	-13900.0	13800.0	13800.0	-13900.0	14200.0	14000.0	-14000.0	14000.0	0.232	-0.239	0.00003
20:59.2	39.0	-8.5	-14000.0	14000.0	13900.0	-14000.0	14100.0	13900.0	-14000.0	14000.0	0.227	-0.232	0.00004
21:12.3	37.1	-6.7	-14000.0	14000.0	13900.0	-14000.0	14100.0	13900.0	-14000.0	14000.0	0.227	-0.231	0.00003
21:25.5	201.0	-6.1	-14100.0	14000.0	14000.0	-14000.0	14000.0	13900.0	-13900.0	14000.0	0.151	-0.154	0.00005
21:38.7	264.0	-6.1	-14100.0	14000.0	14000.0	-14000.0	14000.0	13900.0	-13900.0	14000.0	0.044	-0.044	0.00005
21:51.9	319.0	-6.7	-14100.0	14000.0	14000.0	-14000.0	14000.0	13900.0	-13900.0	14000.0	-0.064	0.068	0.00006
22:05.1	503.0	-7.8	-14100.0	14100.0	14000.0	-14100.0	14000.0	13800.0	-13900.0	13900.0	-0.168	0.170	0.00006
22:18.3	451.0	-7.5	-14100.0	14100.0	14000.0	-14100.0	14000.0	13800.0	-13900.0	13900.0	-0.280	0.277	0.00008
22:31.5	952.0	-8.0	-14200.0	14200.0	14100.0	-14200.0	13900.0	13700.0	-13800.0	13800.0	-0.376	0.370	0.00010
22:44.6	1160.0	-6.4	-14200.0	14200.0	14100.0	-14200.0	13900.0	13700.0	-13800.0	13800.0	-0.397	0.395	0.00010
22:57.8	1160.0	-7.2	-14200.0	14200.0	14100.0	-14200.0	13900.0	13700.0	-13800.0	13800.0	-0.397	0.395	0.00010
23:11.0	1140.0	-7.8	-14200.0	14200.0	14100.0	-14200.0	13900.0	13700.0	-13800.0	13800.0	-0.397	0.395	0.00010
23:24.1	1130.0	-6.0	-14200.0	14200.0	14100.0	-14200.0	13900.0	13700.0	-13800.0	13800.0	-0.397	0.395	0.00010
23:37.3	774.0	-6.2	-14100.0	14000.0	14000.0	-14000.0	14000.0	13900.0	-13900.0	14000.0	-0.300	0.293	0.00004
23:50.5	37.0	-6.7	-14100.0	14000.0	14000.0	-14000.0	14000.0	13900.0	-13900.0	14000.0	-0.297	0.291	0.00004
24:03.6	37.5	-6.5	-14000.0	14000.0	13900.0	-14000.0	14100.0	14000.0	-14000.0	14000.0	-0.145	0.145	0.00003

24:16.8	36.9	207.0	-14000.0	13900.0	13900.0	-14000.0	14100.0	14000.0	-14000.0	14000.0	-0.039	0.036	0.00002
24:30.0	37.1	263.0	-14000.0	13900.0	13900.0	-14000.0	14100.0	14000.0	-14000.0	14000.0	0.065	-0.071	0.00002
24:43.2	38.3	373.0	-14000.0	13900.0	13900.0	-13900.0	14100.0	14000.0	-14000.0	14000.0	0.166	-0.176	0.00001
24:56.4	36.2	527.0	-13900.0	13900.0	13900.0	-13900.0	14200.0	14100.0	-14100.0	14100.0	0.265	-0.279	-0.00001
25:09.6	37.1	829.0	-13900.0	13800.0	13800.0	-13800.0	14200.0	14100.0	-14100.0	14100.0	0.335	-0.353	-0.00002
25:22.9	37.0	903.0	-13900.0	13800.0	13800.0	-13800.0	14200.0	14200.0	-14200.0	14100.0	0.367	-0.384	-0.00003
25:36.0	36.9	1010.0	-13800.0	13700.0	13700.0	-13800.0	14300.0	14200.0	-14200.0	14200.0	0.386	-0.403	-0.00003
25:49.2	37.1	1080.0	-13800.0	13700.0	13700.0	-13800.0	14300.0	14200.0	-14200.0	14200.0	0.400	-0.418	-0.00003
26:02.4	36.5	1060.0	-13800.0	13700.0	13700.0	-13800.0	14300.0	14200.0	-14200.0	14200.0	0.400	-0.418	-0.00003
26:15.6	37.5	1050.0	-13800.0	13700.0	13700.0	-13800.0	14300.0	14200.0	-14200.0	14200.0	0.400	-0.418	-0.00003
26:28.7	36.5	1040.0	-13800.0	13700.0	13700.0	-13800.0	14300.0	14200.0	-14200.0	14200.0	0.400	-0.418	-0.00003
26:41.9	38.1	1020.0	-13800.0	13700.0	13700.0	-13800.0	14300.0	14200.0	-14200.0	14200.0	0.400	-0.418	-0.00003
26:55.0	36.1	1010.0	-13800.0	13700.0	13700.0	-13800.0	14300.0	14200.0	-14200.0	14200.0	0.400	-0.418	-0.00003
27:08.2	37.0	1000.0	-13800.0	13700.0	13700.0	-13800.0	14300.0	14200.0	-14200.0	14200.0	0.400	-0.418	-0.00004
27:21.4	37.2	989.0	-13800.0	13700.0	13700.0	-13800.0	14200.0	14000.0	-14000.0	14000.0	0.268	-0.278	0.00003
27:34.7	36.8	-4.8	-14000.0	14000.0	13900.0	-14000.0	14100.0	13900.0	-14000.0	14000.0	0.263	-0.269	0.00003
27:47.8	227.0	-5.9	-14100.0	14000.0	14000.0	-14000.0	14000.0	13900.0	-13900.0	14000.0	0.148	-0.150	0.00004
28:01.0	274.0	-6.6	-14100.0	14000.0	14000.0	-14000.0	14000.0	13900.0	-13900.0	14000.0	0.039	-0.037	0.00005
28:14.2	378.0	-7.0	-14100.0	14000.0	14000.0	-14000.0	14000.0	13900.0	-13900.0	13900.0	-0.069	0.073	0.00006
28:27.4	572.0	-6.3	-14100.0	14100.0	14000.0	-14100.0	14000.0	13800.0	-13900.0	13900.0	-0.171	0.174	0.00005
28:40.6	418.0	-7.3	-14100.0	14100.0	14000.0	-14100.0	14000.0	13800.0	-13900.0	13900.0	-0.291	0.288	0.00007
28:53.8	967.0	-5.3	-14200.0	14200.0	14100.0	-14200.0	13900.0	13700.0	-13800.0	13800.0	-0.385	0.381	0.00009
29:07.0	1160.0	-6.8	-14200.0	14200.0	14100.0	-14200.0	13900.0	13700.0	-13800.0	13800.0	-0.401	0.399	0.00009
29:20.1	1130.0	-6.4	-14200.0	14200.0	14100.0	-14200.0	13900.0	13700.0	-13800.0	13800.0	-0.401	0.399	0.00010
29:33.3	1120.0	-7.3	-14200.0	14200.0	14100.0	-14200.0	13900.0	13700.0	-13800.0	13800.0	-0.401	0.399	0.00010

29:46.5	1100.0	-6.5	-14200.0	14200.0	14100.0	-14200.0	13900.0	13700.0	-13800.0	13800.0	-0.401	0.398	0.00009
29:59.6	1090.0	-6.0	-14200.0	14200.0	14100.0	-14200.0	13900.0	13700.0	-13800.0	13800.0	-0.401	0.398	0.00004
30:12.8	39.0	-6.7	-14100.0	14000.0	14000.0	-14000.0	14000.0	13900.0	-13900.0	14000.0	-0.303	0.297	0.00004
30:25.9	38.0	-6.8	-14100.0	14000.0	13900.0	-14000.0	14100.0	14000.0	-14000.0	14000.0	-0.116	0.116	0.00002
30:39.1	38.3	236.0	-14000.0	13900.0	13900.0	-14000.0	14100.0	14000.0	-14000.0	14000.0	-0.007	0.003	0.00002
30:52.3	37.1	298.0	-14000.0	13900.0	13900.0	-14000.0	14100.0	14000.0	-14000.0	14000.0	0.099	-0.106	0.00001
31:05.5	36.9	418.0	-14000.0	13900.0	13900.0	-13900.0	14100.0	14000.0	-14000.0	14000.0	0.201	-0.213	0.00000
31:18.8	38.6	625.0	-13900.0	13800.0	13800.0	-13900.0	14200.0	14100.0	-14100.0	14100.0	0.300	-0.315	-0.00002
31:32.0	37.2	936.0	-13800.0	13700.0	13800.0	-13800.0	14300.0	14200.0	-14200.0	14100.0	0.375	-0.393	-0.00004
31:45.2	36.7	1010.0	-13800.0	13700.0	13700.0	-13800.0	14300.0	14200.0	-14200.0	14200.0	0.396	-0.413	-0.00004
31:58.7	38.0	1020.0	-13800.0	13700.0	13700.0	-13800.0	14300.0	14200.0	-14200.0	14200.0	0.396	-0.414	-0.00004
32:11.9	37.9	1010.0	-13800.0	13700.0	13700.0	-13800.0	14300.0	14200.0	-14200.0	14200.0	0.396	-0.414	-0.00004
32:25.0	36.3	997.0	-13800.0	13700.0	13700.0	-13800.0	14300.0	14200.0	-14200.0	14200.0	0.396	-0.413	-0.00003
32:38.2	38.0	982.0	-13800.0	13700.0	13700.0	-13800.0	14300.0	14200.0	-14200.0	14200.0	0.383	-0.408	0.00003
32:51.4	37.8	-7.9	-14000.0	14000.0	13900.0	-14000.0	14100.0	13900.0	-14000.0	14000.0	0.260	-0.265	0.00003
33:04.6	38.2	-7.4	-14000.0	14000.0	13900.0	-14000.0	14100.0	13900.0	-14000.0	14000.0	0.260	-0.265	0.00004
33:17.8	236.0	-7.1	-14100.0	14000.0	14000.0	-14000.0	14000.0	13900.0	-13900.0	14000.0	0.082	-0.082	0.00004
33:31.0	322.0	-6.5	-14100.0	14000.0	14000.0	-14000.0	14000.0	13900.0	-13900.0	14000.0	-0.027	0.031	0.00005
33:44.2	468.0	-7.3	-14100.0	14100.0	14000.0	-14100.0	14000.0	13800.0	-13900.0	13900.0	-0.133	0.136	0.00006
33:57.4	522.0	-6.5	-14100.0	14100.0	14000.0	-14100.0	14000.0	13800.0	-13900.0	13900.0	-0.249	0.247	0.00005
34:10.6	732.0	-6.5	-14100.0	14100.0	14100.0	-14100.0	13900.0	13800.0	-13800.0	13900.0	-0.357	0.351	0.00009
34:23.8	1140.0	-7.3	-14200.0	14200.0	14100.0	-14200.0	13900.0	13700.0	-13800.0	13800.0	-0.408	0.405	0.00009
34:36.9	1130.0	-5.1	-14200.0	14200.0	14100.0	-14200.0	13900.0	13700.0	-13800.0	13800.0	-0.407	0.405	0.00009
34:50.1	1110.0	-6.1	-14200.0	14200.0	14100.0	-14200.0	13900.0	13700.0	-13800.0	13800.0	-0.407	0.405	0.00009
35:03.3	1100.0	-6.5	-14200.0	14200.0	14100.0	-14200.0	13900.0	13700.0	-13800.0	13800.0	-0.408	0.405	0.00009

35:16.4	1080.0	-7.3	-14200.0	14200.0	14100.0	-14200.0	13900.0	13700.0	-13800.0	13800.0	-0.407	0.404	0.00009
35:29.6	1060.0	-6.9	-14200.0	14200.0	14100.0	-14200.0	13900.0	13700.0	-13800.0	13800.0	-0.407	0.403	0.00009
35:42.8	1050.0	-6.2	-14200.0	14200.0	14100.0	-14200.0	13900.0	13700.0	-13800.0	13800.0	-0.407	0.402	0.00009
35:55.9	1040.0	-6.5	-14200.0	14200.0	14100.0	-14200.0	13900.0	13700.0	-13800.0	13800.0	-0.407	0.402	0.00009
36:09.1	54.1	-6.2	-14100.0	14000.0	14000.0	-14000.0	14000.0	13900.0	-13900.0	14000.0	-0.309	0.304	0.00004
36:22.2	37.8	-8.3	-14100.0	14000.0	14000.0	-14000.0	14000.0	13900.0	-13900.0	14000.0	-0.308	0.302	0.00004
36:35.4	37.0	-5.0	-14100.0	14000.0	14000.0	-14000.0	14100.0	13900.0	-14000.0	14000.0	-0.149	0.165	0.00002
36:48.6	37.3	209.0	-14000.0	13900.0	13900.0	-14000.0	14100.0	14000.0	-14000.0	14000.0	-0.063	0.061	0.00002
37:01.7	38.3	258.0	-14000.0	13900.0	13900.0	-14000.0	14100.0	14000.0	-14000.0	14000.0	0.043	-0.048	0.00002
37:14.9	37.0	358.0	-14000.0	13900.0	13900.0	-13900.0	14100.0	14000.0	-14000.0	14000.0	0.147	-0.156	0.00001
37:28.9	35.9	517.0	-13900.0	13900.0	13900.0	-13900.0	14200.0	14000.0	-14100.0	14100.0	0.253	-0.267	-0.00001
37:42.0	37.8	772.0	-13900.0	13800.0	13800.0	-13800.0	14200.0	14100.0	-14100.0	14100.0	0.349	-0.365	-0.00003
37:55.3	37.3	1020.0	-13800.0	13700.0	13700.0	-13800.0	14300.0	14200.0	-14200.0	14200.0	0.393	-0.410	-0.00004
38:08.8	37.0	1070.0	-13800.0	13700.0	13700.0	-13800.0	14300.0	14200.0	-14200.0	14200.0	0.404	-0.421	-0.00004
38:22.0	37.1	1050.0	-13800.0	13700.0	13700.0	-13800.0	14300.0	14200.0	-14200.0	14200.0	0.404	-0.421	-0.00004
38:35.1	37.9	1040.0	-13800.0	13700.0	13700.0	-13800.0	14300.0	14200.0	-14200.0	14200.0	0.404	-0.421	-0.00004
38:48.3	37.5	1020.0	-13800.0	13700.0	13700.0	-13800.0	14300.0	14200.0	-14200.0	14200.0	0.404	-0.421	-0.00004
39:01.5	37.1	1010.0	-13800.0	13700.0	13700.0	-13800.0	14300.0	14200.0	-14200.0	14200.0	0.404	-0.421	-0.00003
39:14.6	37.6	998.0	-13800.0	13700.0	13700.0	-13800.0	14300.0	14200.0	-14200.0	14200.0	0.404	-0.421	0.00001
39:27.8	36.7	-5.8	-14000.0	14000.0	13900.0	-14000.0	14100.0	13900.0	-14000.0	14000.0	0.258	-0.263	0.00003
39:41.1	38.0	-5.9	-14000.0	14000.0	13900.0	-14000.0	14100.0	13900.0	-14000.0	14000.0	0.258	-0.262	0.00005
39:54.3	362.0	-3.6	-14100.0	14000.0	14000.0	-14000.0	14000.0	13900.0	-13900.0	13900.0	-0.056	0.060	0.00005
40:07.5	530.0	-6.7	-14100.0	14100.0	14000.0	-14100.0	14000.0	13800.0	-13900.0	13900.0	-0.167	0.170	0.00006
40:20.7	567.0	-6.5	-14100.0	14100.0	14000.0	-14100.0	14000.0	13800.0	-13900.0	13900.0	-0.288	0.285	0.00007
40:33.9	854.0	-5.5	-14200.0	14200.0	14100.0	-14200.0	13900.0	13700.0	-13800.0	13800.0	-0.386	0.381	0.00009

40:47.1	1080.0	-4.8	-14200.0	14200.0	14100.0	-14200.0	13900.0	13700.0	-13800.0	13800.0	-0.399	0.397	0.00009
41:00.2	1060.0	-4.7	-14200.0	14200.0	14100.0	-14200.0	13900.0	13700.0	-13800.0	13800.0	-0.399	0.397	0.00009
41:13.4	1040.0	-4.8	-14200.0	14200.0	14100.0	-14200.0	13900.0	13700.0	-13800.0	13800.0	-0.399	0.397	0.00009
41:26.5	1030.0	-4.5	-14200.0	14200.0	14100.0	-14200.0	13900.0	13700.0	-13800.0	13800.0	-0.399	0.397	0.00004
41:39.7	38.7	-5.2	-14000.0	14000.0	14000.0	-14000.0	14000.0	13900.0	-13900.0	14000.0	-0.307	0.302	0.00004
41:52.9	37.4	169.0	-14000.0	14000.0	13900.0	-14000.0	14100.0	14000.0	-14000.0	14000.0	-0.080	0.081	0.00002
42:06.0	38.5	247.0	-14000.0	13900.0	13900.0	-14000.0	14100.0	14000.0	-14000.0	14000.0	0.032	-0.035	0.00002
42:19.2	36.5	347.0	-14000.0	13900.0	13900.0	-14000.0	14100.0	14000.0	-14000.0	14000.0	0.141	-0.149	0.00001
42:32.4	38.0	494.0	-13900.0	13900.0	13900.0	-13900.0	14100.0	14000.0	-14100.0	14100.0	0.247	-0.259	-0.00001
42:45.7	36.5	747.0	-13900.0	13800.0	13800.0	-13800.0	14200.0	14100.0	-14100.0	14100.0	0.350	-0.365	-0.00003
42:58.9	36.5	1020.0	-13800.0	13700.0	13700.0	-13800.0	14300.0	14200.0	-14200.0	14200.0	0.402	-0.419	-0.00003
43:12.1	37.5	1000.0	-13800.0	13700.0	13700.0	-13800.0	14300.0	14200.0	-14200.0	14200.0	0.402	-0.419	-0.00003
43:25.3	38.3	990.0	-13800.0	13700.0	13700.0	-13800.0	14300.0	14200.0	-14200.0	14200.0	0.402	-0.419	-0.00003
43:38.5	38.2	974.0	-13800.0	13700.0	13700.0	-13800.0	14300.0	14200.0	-14200.0	14100.0	0.402	-0.419	-0.00003
43:51.6	37.2	959.0	-13800.0	13700.0	13700.0	-13800.0	14300.0	14200.0	-14200.0	14100.0	0.402	-0.419	-0.00003
44:04.8	37.1	527.0	-13900.0	13900.0	13800.0	-13900.0	14100.0	14000.0	-14000.0	14000.0	0.259	-0.265	0.00003
44:18.1	36.9	-6.4	-14000.0	14000.0	13900.0	-14000.0	14100.0	13900.0	-14000.0	14000.0	0.256	-0.260	0.00003
44:31.2	37.8	-7.1	-14000.0	14000.0	13900.0	-14000.0	14100.0	13900.0	-14000.0	14000.0	0.256	-0.260	0.00004
44:44.4	394.0	-6.6	-14100.0	14000.0	14000.0	-14100.0	14000.0	13900.0	-13900.0	13900.0	-0.090	0.095	0.00005
44:57.7	595.0	-6.8	-14100.0	14100.0	14000.0	-14100.0	14000.0	13800.0	-13900.0	13900.0	-0.202	0.204	0.00006
45:10.9	486.0	-5.7	-14100.0	14100.0	14000.0	-14100.0	14000.0	13800.0	-13900.0	13900.0	-0.326	0.322	0.00008
45:24.1	1140.0	-4.0	-14200.0	14200.0	14100.0	-14200.0	13900.0	13700.0	-13800.0	13800.0	-0.410	0.407	0.00009
45:37.2	1120.0	-5.2	-14200.0	14200.0	14100.0	-14200.0	13900.0	13700.0	-13800.0	13800.0	-0.410	0.407	0.00009
45:50.4	1110.0	-3.5	-14200.0	14200.0	14100.0	-14200.0	13900.0	13700.0	-13800.0	13800.0	-0.410	0.407	0.00009
46:03.6	1090.0	-4.5	-14200.0	14200.0	14100.0	-14200.0	13900.0	13700.0	-13800.0	13800.0	-0.410	0.407	0.00009

46:16.7	1080.0	-4.5	-14200.0	14200.0	14100.0	-14200.0	13900.0	13900.0	-13900.0	14000.0	-0.310	0.307	0.00004
46:29.9	37.9	-3.6	-14000.0	14000.0	14000.0	-14000.0	14000.0	13900.0	-13900.0	14000.0	-0.307	0.303	0.00004
46:43.0	36.8	188.0	-14000.0	14000.0	13900.0	-14000.0	14100.0	14000.0	-14000.0	14000.0	-0.121	0.123	0.00003
46:56.2	35.9	269.0	-14000.0	13900.0	13900.0	-14000.0	14100.0	14000.0	-14000.0	14000.0	-0.008	0.007	0.00002
47:09.4	36.9	314.0	-14000.0	13900.0	13900.0	-14000.0	14100.0	14000.0	-14000.0	14000.0	0.103	-0.108	0.00001
47:22.6	36.9	441.0	-14000.0	13900.0	13900.0	-13900.0	14100.0	14000.0	-14000.0	14000.0	0.211	-0.221	0.00000
47:35.9	36.4	654.0	-13900.0	13800.0	13800.0	-13900.0	14200.0	14100.0	-14100.0	14100.0	0.317	-0.331	-0.00002
47:49.3	36.9	989.0	-13800.0	13700.0	13700.0	-13800.0	14300.0	14200.0	-14200.0	14100.0	0.399	-0.415	-0.00003
48:02.5	36.8	962.0	-13800.0	13700.0	13700.0	-13800.0	14200.0	14200.0	-14200.0	14100.0	0.399	-0.415	-0.00003
48:15.6	35.9	949.0	-13800.0	13700.0	13800.0	-13800.0	14200.0	14200.0	-14200.0	14100.0	0.399	-0.415	-0.00003
48:28.8	37.5	936.0	-13800.0	13700.0	13800.0	-13800.0	14200.0	14100.0	-14200.0	14100.0	0.399	-0.415	-0.00003
48:42.0	36.0	-5.2	-14000.0	14000.0	13900.0	-14000.0	14100.0	13900.0	-14000.0	14000.0	0.253	-0.257	0.00003
48:55.3	36.9	-5.2	-14000.0	14000.0	13900.0	-14000.0	14100.0	13900.0	-14000.0	14000.0	0.253	-0.257	0.00003
49:08.4	35.4	-4.7	-14000.0	14000.0	13900.0	-14000.0	14100.0	13900.0	-14000.0	14000.0	0.080	-0.165	0.00004
49:21.6	336.0	-5.7	-14100.0	14000.0	14000.0	-14000.0	14000.0	13900.0	-13900.0	14000.0	-0.045	0.050	0.00005
49:34.8	501.0	-4.9	-14100.0	14100.0	14000.0	-14100.0	14000.0	13800.0	-13900.0	13900.0	-0.158	0.162	0.00006
49:48.0	563.0	-5.3	-14100.0	14100.0	14000.0	-14100.0	14000.0	13800.0	-13900.0	13900.0	-0.280	0.279	0.00006
50:01.2	880.0	-6.8	-14200.0	14200.0	14100.0	-14200.0	13900.0	13700.0	-13800.0	13800.0	-0.393	0.389	0.00009
50:14.4	1080.0	-6.3	-14200.0	14200.0	14100.0	-14200.0	13900.0	13700.0	-13800.0	13800.0	-0.404	0.402	0.00009
50:27.6	1060.0	-7.0	-14200.0	14200.0	14100.0	-14200.0	13900.0	13700.0	-13800.0	13800.0	-0.404	0.402	0.00009
50:40.7	1050.0	0.8	-14200.0	14200.0	14100.0	-14200.0	13900.0	13700.0	-13800.0	13800.0	-0.404	0.402	0.00009
50:53.9	1030.0	-6.1	-14100.0	14000.0	14000.0	-14000.0	14000.0	13900.0	-13900.0	14000.0	-0.307	0.304	0.00004
51:07.1	38.1	-7.2	-14100.0	14000.0	14000.0	-14000.0	14000.0	13900.0	-13900.0	14000.0	-0.305	0.302	0.00003
51:20.2	36.3	176.0	-14000.0	13900.0	13900.0	-14000.0	14100.0	14000.0	-14000.0	14000.0	-0.139	0.140	0.00003
51:33.4	37.1	215.0	-14000.0	13900.0	13900.0	-14000.0	14100.0	14000.0	-14000.0	14000.0	-0.036	0.037	0.00002

51:46.5	37.4	286.0	-14000.0	13900.0	13900.0	-14000.0	14100.0	14000.0	-14000.0	14000.0	0.076	-0.079	0.00002
51:59.7	37.9	387.0	-14000.0	13900.0	13900.0	-13900.0	14100.0	14000.0	-14000.0	14000.0	0.178	-0.186	0.00001
52:13.0	36.6	550.0	-13900.0	13800.0	13800.0	-13900.0	14200.0	14100.0	-14100.0	14100.0	0.278	-0.289	-0.00001
52:26.2	36.9	801.0	-13900.0	13800.0	13800.0	-13800.0	14200.0	14100.0	-14100.0	14100.0	0.374	-0.388	-0.00003
52:39.4	37.4	961.0	-13800.0	13700.0	13800.0	-13800.0	14200.0	14200.0	-14200.0	14100.0	0.400	-0.417	-0.00003
52:52.7	37.1	951.0	-13800.0	13700.0	13800.0	-13800.0	14200.0	14200.0	-14200.0	14100.0	0.400	-0.417	-0.00003
53:05.8	38.6	940.0	-13800.0	13700.0	13800.0	-13800.0	14200.0	14200.0	-14200.0	14100.0	0.400	-0.417	-0.00003
53:19.0	38.2	925.0	-13800.0	13700.0	13800.0	-13800.0	14200.0	14100.0	-14200.0	14100.0	0.400	-0.417	0.00003
53:32.1	36.9	-5.1	-14000.0	14000.0	13900.0	-14000.0	14100.0	13900.0	-14000.0	14000.0	0.252	-0.256	0.00003
53:45.4	36.5	-3.6	-14000.0	14000.0	13900.0	-14000.0	14100.0	13900.0	-14000.0	14000.0	0.252	-0.256	0.00003
53:58.6	35.8	-4.7	-14000.0	14000.0	13900.0	-14000.0	14100.0	13900.0	-14000.0	14000.0	0.252	-0.256	0.00003
54:11.8	37.2	-3.6	-14000.0	14000.0	13900.0	-14000.0	14100.0	13900.0	-14000.0	14000.0	0.252	-0.256	0.00003
54:24.9	37.1	-2.7	-14000.0	14000.0	13900.0	-14000.0	14100.0	13900.0	-14000.0	14000.0	0.252	-0.256	0.00003
12:09.7	51.5	-8.5	-14000.0	14000.0	13900.0	-14000.0	14000.0	13900.0	-14000.0	14000.0	0.247	-0.254	0.00003
12:22.8	51.8	-8.9	-14000.0	14000.0	13900.0	-14000.0	14000.0	13900.0	-14000.0	14000.0	0.247	-0.254	0.00003
12:36.0	51.7	-8.7	-14000.0	14000.0	13900.0	-14000.0	14000.0	13900.0	-14000.0	14000.0	0.247	-0.254	0.00003
12:49.2	49.9	-9.0	-14000.0	14000.0	13900.0	-14000.0	14000.0	13900.0	-14000.0	14000.0	0.247	-0.254	0.00003
13:02.3	50.6	-7.9	-14000.0	14000.0	13900.0	-14000.0	14000.0	13900.0	-14000.0	14000.0	0.247	-0.254	0.00003
13:15.5	51.9	-7.9	-14000.0	14000.0	13900.0	-14000.0	14000.0	13900.0	-14000.0	14000.0	0.247	-0.254	0.00003
13:28.6	51.1	-7.3	-14000.0	14000.0	13900.0	-14000.0	14000.0	13900.0	-14000.0	14000.0	0.247	-0.254	0.00003
13:41.8	51.9	-6.3	-14000.0	14000.0	13900.0	-14000.0	14000.0	13900.0	-14000.0	14000.0	0.247	-0.254	0.00003
13:55.0	51.0	-7.3	-14000.0	14000.0	13900.0	-14000.0	14000.0	13900.0	-14000.0	14000.0	0.247	-0.254	0.00003
14:08.1	51.7	-8.3	-14000.0	14000.0	13900.0	-14000.0	14000.0	13900.0	-14000.0	14000.0	0.218	-0.242	0.00004
14:21.3	299.0	-7.7	-14100.0	14000.0	14000.0	-14000.0	14000.0	13900.0	-13900.0	14000.0	0.015	-0.010	0.00005
14:34.5	385.0	-7.8	-14100.0	14000.0	14000.0	-14000.0	14000.0	13800.0	-13900.0	14000.0	-0.051	0.057	0.00005

14:47.7	466.0	-7.6	-14100.0	14000.0	14000.0	-14000.0	14000.0	13800.0	-13900.0	13900.0	-0.116	0.122	0.00006
15:00.9	597.0	-7.8	-14100.0	14100.0	14000.0	-14100.0	14000.0	13800.0	-13900.0	13900.0	-0.182	0.186	0.00007
15:14.1	602.0	-8.7	-14100.0	14100.0	14000.0	-14100.0	14000.0	13800.0	-13900.0	13900.0	-0.255	0.255	0.00007
15:27.3	583.0	-7.4	-14100.0	14100.0	14000.0	-14100.0	14000.0	13800.0	-13800.0	13900.0	-0.326	0.324	0.00008
15:40.4	954.0	-7.1	-14200.0	14200.0	14100.0	-14200.0	13900.0	13700.0	-13800.0	13900.0	-0.388	0.384	0.00010
15:53.6	1320.0	-6.2	-14200.0	14200.0	14200.0	-14200.0	13800.0	13600.0	-13700.0	13800.0	-0.449	0.445	0.00012
16:06.8	1620.0	-6.7	-14300.0	14300.0	14200.0	-14300.0	13800.0	13600.0	-13600.0	13700.0	-0.509	0.505	0.00014
16:20.0	1970.0	-7.0	-14400.0	14400.0	14300.0	-14400.0	13700.0	13500.0	-13500.0	13700.0	-0.566	0.563	0.00016
16:33.1	2170.0	-5.7	-14400.0	14400.0	14300.0	-14400.0	13600.0	13400.0	-13500.0	13600.0	-0.583	0.581	0.00016
16:46.3	2220.0	-7.0	-14400.0	14500.0	14400.0	-14400.0	13600.0	13400.0	-13500.0	13600.0	-0.591	0.589	0.00017
16:59.5	2260.0	-7.2	-14400.0	14500.0	14400.0	-14500.0	13600.0	13400.0	-13500.0	13600.0	-0.597	0.595	0.00017
17:12.6	2250.0	-6.5	-14400.0	14500.0	14400.0	-14500.0	13600.0	13400.0	-13500.0	13600.0	-0.597	0.595	0.00017
17:25.8	2240.0	-7.0	-14400.0	14500.0	14400.0	-14500.0	13600.0	13400.0	-13500.0	13600.0	-0.597	0.595	0.00017
17:38.9	2240.0	-9.0	-14400.0	14500.0	14400.0	-14500.0	13600.0	13400.0	-13500.0	13600.0	-0.597	0.595	0.00017
17:52.1	2230.0	-7.2	-14400.0	14500.0	14400.0	-14500.0	13600.0	13400.0	-13500.0	13600.0	-0.597	0.595	0.00017
18:05.3	2230.0	-9.3	-14400.0	14500.0	14400.0	-14500.0	13600.0	13400.0	-13500.0	13600.0	-0.597	0.595	0.00017
18:18.4	2230.0	-7.7	-14400.0	14500.0	14400.0	-14500.0	13600.0	13400.0	-13500.0	13600.0	-0.597	0.595	0.00017
18:31.6	2230.0	-8.1	-14400.0	14500.0	14400.0	-14500.0	13600.0	13400.0	-13500.0	13600.0	-0.597	0.595	0.00016
18:44.8	1390.0	-9.2	-14100.0	14000.0	14000.0	-14000.0	13900.0	13800.0	-13900.0	13900.0	-0.350	0.348	0.00005
18:58.0	54.5	-9.6	-14100.0	14000.0	14000.0	-14000.0	13900.0	13800.0	-13900.0	13900.0	-0.342	0.340	0.00005
19:11.1	52.4	-8.6	-14100.0	14000.0	14000.0	-14000.0	13900.0	13800.0	-13900.0	13900.0	-0.323	0.339	0.00004
19:24.3	50.7	207.0	-14000.0	14000.0	13900.0	-14000.0	14000.0	13900.0	-13900.0	14000.0	-0.140	0.144	0.00003
19:37.5	53.8	240.0	-14000.0	13900.0	13900.0	-14000.0	14000.0	13900.0	-13900.0	14000.0	-0.066	0.069	0.00004
19:50.6	52.4	234.0	-14000.0	13900.0	13900.0	-14000.0	14000.0	13900.0	-13900.0	14000.0	0.009	-0.007	0.00003
20:03.8	51.5	280.0	-14000.0	13900.0	13900.0	-13900.0	14000.0	13900.0	-13900.0	14000.0	0.082	-0.083	0.00003

20:17.0	51.2	372.0	-14000.0	13900.0	13900.0	-13900.0	14000.0	13900.0	-14000.0	14000.0	0.153	-0.157	0.00002
20:30.2	51.2	462.0	-14000.0	13900.0	13900.0	-13900.0	14000.0	14000.0	-14000.0	14000.0	0.224	-0.231	0.00002
20:43.4	51.0	579.0	-13900.0	13800.0	13800.0	-13900.0	14100.0	14000.0	-14000.0	14000.0	0.293	-0.303	0.00001
20:56.6	51.9	760.0	-13900.0	13800.0	13800.0	-13800.0	14100.0	14000.0	-14100.0	14100.0	0.360	-0.371	-0.00001
21:09.8	52.2	974.0	-13800.0	13700.0	13700.0	-13800.0	14200.0	14100.0	-14100.0	14100.0	0.427	-0.439	-0.00003
21:23.0	52.1	1300.0	-13800.0	13600.0	13700.0	-13700.0	14200.0	14200.0	-14200.0	14200.0	0.490	-0.503	-0.00004
21:36.2	51.8	1530.0	-13700.0	13600.0	13600.0	-13600.0	14300.0	14200.0	-14200.0	14200.0	0.520	-0.535	-0.00005
21:49.4	52.4	1620.0	-13700.0	13600.0	13600.0	-13600.0	14300.0	14200.0	-14300.0	14300.0	0.548	-0.561	-0.00006
22:02.6	52.0	1770.0	-13700.0	13500.0	13600.0	-13600.0	14300.0	14300.0	-14300.0	14300.0	0.559	-0.574	-0.00007
22:15.7	51.1	1870.0	-13600.0	13500.0	13500.0	-13600.0	14300.0	14300.0	-14300.0	14300.0	0.578	-0.593	-0.00007
22:28.9	50.3	1950.0	-13600.0	13500.0	13500.0	-13500.0	14400.0	14300.0	-14300.0	14300.0	0.591	-0.606	-0.00007
22:42.1	50.1	1970.0	-13600.0	13500.0	13500.0	-13500.0	14400.0	14300.0	-14400.0	14300.0	0.596	-0.610	-0.00007
22:55.2	52.6	1950.0	-13600.0	13500.0	13500.0	-13500.0	14400.0	14300.0	-14400.0	14300.0	0.595	-0.610	-0.00007
23:08.4	51.3	1940.0	-13600.0	13500.0	13500.0	-13500.0	14400.0	14300.0	-14400.0	14300.0	0.595	-0.610	-0.00007
23:21.6	51.8	1930.0	-13600.0	13500.0	13500.0	-13500.0	14400.0	14300.0	-14400.0	14300.0	0.595	-0.610	-0.00008
23:34.7	51.8	1930.0	-13600.0	13500.0	13500.0	-13500.0	14300.0	14300.0	-14300.0	14300.0	0.595	-0.610	-0.00007
23:47.9	50.3	1920.0	-13600.0	13500.0	13500.0	-13500.0	14300.0	14300.0	-14300.0	14300.0	0.595	-0.610	-0.00007
24:01.0	51.5	1920.0	-13600.0	13500.0	13500.0	-13500.0	14300.0	14300.0	-14300.0	14300.0	0.595	-0.610	-0.00007
24:14.2	51.2	-13.9	-14000.0	13900.0	13900.0	-14000.0	14000.0	13900.0	-14000.0	14000.0	0.294	-0.298	0.00005
24:27.4	51.0	-14.2	-14000.0	13900.0	13900.0	-14000.0	14000.0	13900.0	-14000.0	14000.0	0.293	-0.297	0.00005
24:40.6	51.0	-13.2	-14000.0	13900.0	13900.0	-14000.0	14000.0	13900.0	-13900.0	14000.0	0.139	-0.142	0.00006
24:53.9	268.0	-13.4	-14000.0	14000.0	13900.0	-14000.0	14000.0	13800.0	-13900.0	14000.0	0.104	-0.098	0.00006
25:07.0	265.0	-11.1	-14000.0	14000.0	13900.0	-14000.0	14000.0	13800.0	-13900.0	14000.0	0.104	-0.098	0.00006
25:20.2	261.0	-12.5	-14000.0	14000.0	13900.0	-14000.0	14000.0	13800.0	-13900.0	14000.0	0.104	-0.098	0.00006
25:33.3	259.0	-11.2	-14000.0	14000.0	13900.0	-14000.0	14000.0	13800.0	-13900.0	14000.0	0.104	-0.098	0.00006

25:46.5	259.0	-12.3	-14000.0	14000.0	13900.0	-14000.0	14000.0	13800.0	-13900.0	14000.0	0.102	-0.096	0.00006
25:59.7	257.0	-13.8	-14000.0	14000.0	13900.0	-14000.0	14000.0	13800.0	-13900.0	14000.0	0.102	-0.096	0.00006
26:12.8	258.0	-11.8	-14000.0	14000.0	13900.0	-14000.0	14000.0	13800.0	-13900.0	14000.0	0.102	-0.096	0.00007
26:26.0	257.0	-13.4	-14000.0	14000.0	13900.0	-14000.0	14000.0	13800.0	-13900.0	14000.0	0.102	-0.096	0.00007
26:39.2	256.0	-12.6	-14000.0	14000.0	13900.0	-14000.0	14000.0	13800.0	-13900.0	14000.0	0.101	-0.096	0.00006
26:52.3	256.0	-12.3	-14000.0	14000.0	13900.0	-14000.0	13900.0	13800.0	-13900.0	14000.0	0.101	-0.096	0.00006
27:05.5	256.0	-15.7	-14000.0	14000.0	13900.0	-14000.0	13900.0	13800.0	-13900.0	14000.0	0.084	-0.080	0.00007
27:18.7	357.0	-15.6	-14100.0	14000.0	14000.0	-14000.0	13900.0	13800.0	-13900.0	13900.0	0.006	0.000	0.00008
27:31.9	462.0	-14.6	-14100.0	14000.0	14000.0	-14100.0	13900.0	13800.0	-13900.0	13900.0	-0.069	0.076	0.00008
27:45.1	576.0	-14.3	-14100.0	14100.0	14000.0	-14100.0	13900.0	13800.0	-13800.0	13900.0	-0.146	0.152	0.00009
27:58.3	726.0	-15.6	-14100.0	14100.0	14000.0	-14100.0	13900.0	13800.0	-13900.0	13900.0	-0.238	0.239	0.00007
28:11.5	467.0	-14.9	-14100.0	14100.0	14000.0	-14100.0	13900.0	13800.0	-13800.0	13900.0	-0.320	0.318	0.00010
28:24.6	905.0	-14.0	-14200.0	14200.0	14100.0	-14200.0	13800.0	13700.0	-13700.0	13800.0	-0.394	0.390	0.00012
28:37.8	1340.0	-14.0	-14300.0	14200.0	14200.0	-14300.0	13700.0	13600.0	-13700.0	13700.0	-0.467	0.463	0.00014
28:51.0	1710.0	-15.3	-14300.0	14300.0	14200.0	-14300.0	13700.0	13500.0	-13600.0	13700.0	-0.540	0.536	0.00017
29:04.2	1940.0	-14.5	-14400.0	14400.0	14300.0	-14400.0	13600.0	13500.0	-13500.0	13600.0	-0.561	0.559	0.00017
29:17.3	2110.0	-14.8	-14400.0	14400.0	14300.0	-14400.0	13600.0	13400.0	-13500.0	13600.0	-0.581	0.579	0.00018
29:30.5	2090.0	-14.2	-14400.0	14400.0	14300.0	-14400.0	13600.0	13400.0	-13500.0	13600.0	-0.588	0.587	0.00018
29:43.7	2230.0	-16.6	-14400.0	14500.0	14400.0	-14500.0	13600.0	13400.0	-13500.0	13600.0	-0.602	0.601	0.00019
29:56.8	2260.0	-15.0	-14400.0	14500.0	14400.0	-14500.0	13600.0	13400.0	-13500.0	13600.0	-0.602	0.601	0.00019
30:10.0	2260.0	-14.9	-14400.0	14500.0	14400.0	-14500.0	13600.0	13400.0	-13500.0	13600.0	-0.602	0.601	0.00018
30:23.1	2250.0	-14.1	-14400.0	14500.0	14400.0	-14500.0	13600.0	13400.0	-13500.0	13600.0	-0.602	0.601	0.00018
30:36.3	2250.0	-14.3	-14400.0	14500.0	14400.0	-14500.0	13600.0	13400.0	-13500.0	13600.0	-0.602	0.601	0.00018
30:49.5	2240.0	-13.0	-14400.0	14500.0	14400.0	-14400.0	13600.0	13400.0	-13500.0	13600.0	-0.602	0.601	0.00018
31:02.6	2240.0	-14.7	-14400.0	14500.0	14400.0	-14500.0	13600.0	13400.0	-13500.0	13600.0	-0.602	0.601	0.00018

31:15.8	2230.0	-12.8	-14400.0	14400.0	14100.0	-14100.0	13900.0	13800.0	-13900.0	13900.0	-0.348	0.347	0.00006
31:29.0	56.0	-13.7	-14100.0	14000.0	14000.0	-14000.0	13900.0	13800.0	-13900.0	13900.0	-0.341	0.341	0.00006
31:42.2	53.7	-13.9	-14100.0	14000.0	14000.0	-14000.0	13900.0	13800.0	-13900.0	13900.0	-0.341	0.340	0.00005
31:55.3	53.1	199.0	-14000.0	13900.0	13900.0	-14000.0	14000.0	13900.0	-13900.0	14000.0	-0.120	0.126	0.00005
32:08.5	51.2	199.0	-14000.0	13900.0	13900.0	-14000.0	14000.0	13900.0	-13900.0	14000.0	-0.039	0.046	0.00005
32:21.7	54.5	229.0	-14000.0	13900.0	13900.0	-14000.0	14000.0	13900.0	-13900.0	14000.0	0.041	-0.037	0.00004
32:34.9	53.3	283.0	-14000.0	13900.0	13900.0	-13900.0	14000.0	13900.0	-13900.0	14000.0	0.118	-0.118	0.00004
32:48.1	52.8	395.0	-14000.0	13900.0	13900.0	-13900.0	14000.0	13900.0	-14000.0	14000.0	0.194	-0.198	0.00003
33:01.3	52.1	512.0	-13900.0	13900.0	13900.0	-13900.0	14000.0	14000.0	-14000.0	14000.0	0.270	-0.277	0.00002
33:14.5	52.5	653.0	-13900.0	13800.0	13800.0	-13800.0	14100.0	14000.0	-14000.0	14100.0	0.343	-0.353	0.00001
33:27.7	52.7	869.0	-13900.0	13800.0	13800.0	-13800.0	14100.0	14100.0	-14100.0	14100.0	0.416	-0.426	-0.00001
33:40.9	53.1	1180.0	-13800.0	13700.0	13700.0	-13700.0	14200.0	14200.0	-14200.0	14200.0	0.487	-0.498	-0.00003
33:54.1	53.3	1570.0	-13700.0	13600.0	13600.0	-13600.0	14300.0	14200.0	-14300.0	14300.0	0.556	-0.568	-0.00006
34:07.3	52.1	1950.0	-13600.0	13500.0	13500.0	-13500.0	14400.0	14300.0	-14300.0	14300.0	0.594	-0.608	-0.00007
34:20.5	51.6	1920.0	-13600.0	13500.0	13500.0	-13500.0	14400.0	14300.0	-14300.0	14300.0	0.594	-0.608	-0.00007
34:33.6	52.0	1910.0	-13600.0	13500.0	13500.0	-13500.0	14300.0	14300.0	-14300.0	14300.0	0.594	-0.608	-0.00007
34:46.8	51.5	1900.0	-13600.0	13500.0	13500.0	-13500.0	14300.0	14300.0	-14300.0	14300.0	0.594	-0.608	-0.00006
34:59.9	51.6	1900.0	-13600.0	13500.0	13500.0	-13500.0	14300.0	14300.0	-14300.0	14300.0	0.594	-0.608	-0.00006
35:13.1	52.4	1900.0	-13600.0	13500.0	13500.0	-13500.0	14300.0	14300.0	-14300.0	14300.0	0.594	-0.608	-0.00006
35:26.3	52.8	1890.0	-13600.0	13500.0	13500.0	-13500.0	14300.0	14300.0	-14300.0	14300.0	0.594	-0.608	-0.00006
35:39.4	51.1	73.6	-14000.0	13900.0	13900.0	-14000.0	14000.0	13900.0	-13900.0	14000.0	0.295	-0.298	0.00005
35:52.6	51.7	-16.6	-14000.0	13900.0	13900.0	-14000.0	14000.0	13900.0	-13900.0	14000.0	0.294	-0.297	0.00005
36:05.8	51.2	-15.3	-14000.0	13900.0	13900.0	-14000.0	14000.0	13900.0	-13900.0	14000.0	0.209	-0.297	0.00007
36:19.1	367.0	-14.0	-14100.0	14000.0	14000.0	-14000.0	13900.0	13800.0	-13900.0	13900.0	-0.001	0.007	0.00008
36:32.3	476.0	-14.4	-14100.0	14000.0	14000.0	-14100.0	13900.0	13800.0	-13900.0	13900.0	-0.083	0.090	0.00008

36:45.5	611.0	-14.6	-14100.0	14100.0	14000.0	-14100.0	13900.0	13800.0	-13800.0	13900.0	-0.166	0.172	0.00008
36:58.7	307.0	-13.9	-14100.0	14000.0	14000.0	-14000.0	13900.0	13800.0	-13900.0	13900.0	-0.267	0.267	0.00009
37:11.9	660.0	-15.2	-14100.0	14100.0	14000.0	-14100.0	13900.0	13700.0	-13800.0	13900.0	-0.349	0.347	0.00011
37:25.1	1090.0	-14.5	-14200.0	14200.0	14100.0	-14200.0	13800.0	13600.0	-13700.0	13800.0	-0.429	0.425	0.00013
37:38.2	1530.0	-13.0	-14300.0	14300.0	14200.0	-14300.0	13700.0	13500.0	-13600.0	13700.0	-0.507	0.503	0.00016
37:51.4	1990.0	-14.3	-14400.0	14400.0	14300.0	-14400.0	13600.0	13400.0	-13500.0	13600.0	-0.578	0.577	0.00018
38:04.6	2090.0	-14.6	-14400.0	14400.0	14300.0	-14400.0	13600.0	13400.0	-13500.0	13600.0	-0.588	0.584	0.00019
38:17.7	2270.0	-14.8	-14400.0	14500.0	14400.0	-14500.0	13500.0	13400.0	-13500.0	13600.0	-0.600	0.599	0.00019
38:30.9	2250.0	-16.2	-14400.0	14500.0	14400.0	-14400.0	13600.0	13400.0	-13500.0	13600.0	-0.600	0.599	0.00019
38:44.1	2240.0	-15.2	-14400.0	14500.0	14400.0	-14400.0	13600.0	13400.0	-13500.0	13600.0	-0.600	0.599	0.00019
38:57.2	2240.0	-15.1	-14400.0	14500.0	14400.0	-14400.0	13600.0	13400.0	-13500.0	13600.0	-0.600	0.599	0.00019
39:10.4	2230.0	-13.3	-14400.0	14500.0	14400.0	-14400.0	13600.0	13400.0	-13500.0	13600.0	-0.600	0.599	0.00019
39:23.6	2230.0	-14.9	-14400.0	14500.0	14400.0	-14400.0	13600.0	13400.0	-13500.0	13600.0	-0.600	0.599	0.00019
39:36.7	2220.0	-14.9	-14400.0	14500.0	14400.0	-14400.0	13600.0	13400.0	-13500.0	13600.0	-0.600	0.599	0.00019
39:49.9	2220.0	-15.9	-14400.0	14500.0	14400.0	-14400.0	13600.0	13400.0	-13500.0	13600.0	-0.600	0.599	0.00019
40:03.0	2220.0	-16.0	-14400.0	14500.0	14400.0	-14400.0	13600.0	13400.0	-13500.0	13600.0	-0.600	0.599	0.00019
40:16.2	2210.0	-15.6	-14400.0	14500.0	14400.0	-14400.0	13600.0	13400.0	-13500.0	13600.0	-0.600	0.599	0.00018
40:29.4	2210.0	-16.5	-14400.0	14400.0	14400.0	-14400.0	13600.0	13400.0	-13500.0	13600.0	-0.600	0.599	0.00019
40:42.5	2210.0	-16.6	-14400.0	14500.0	14400.0	-14400.0	13600.0	13400.0	-13500.0	13600.0	-0.600	0.599	0.00019
40:55.7	2200.0	-15.9	-14400.0	14400.0	14300.0	-14400.0	13600.0	13400.0	-13500.0	13600.0	-0.600	0.599	0.00019
41:08.9	2200.0	-16.1	-14400.0	14400.0	14300.0	-14400.0	13600.0	13400.0	-13500.0	13600.0	-0.600	0.599	0.00019
41:22.0	2200.0	-14.5	-14400.0	14400.0	14300.0	-14400.0	13600.0	13400.0	-13500.0	13600.0	-0.600	0.599	0.00019
41:35.2	2190.0	-18.1	-14400.0	14400.0	14300.0	-14400.0	13600.0	13400.0	-13500.0	13600.0	-0.600	0.599	0.00019
41:48.3	2190.0	-16.6	-14400.0	14400.0	14300.0	-14400.0	13600.0	13400.0	-13500.0	13600.0	-0.600	0.599	0.00019
42:01.5	2190.0	-17.4	-14400.0	14400.0	14300.0	-14400.0	13600.0	13400.0	-13500.0	13600.0	-0.600	0.599	0.00019

42:14.7	2190.0	-18.6	-14400.0	14400.0	14300.0	-14400.0	13600.0	13400.0	-13500.0	13600.0	-0.600	0.599	0.00019
42:27.8	2180.0	-18.8	-14400.0	14400.0	14300.0	-14400.0	13600.0	13400.0	-13500.0	13600.0	-0.600	0.599	0.00019
42:41.0	2180.0	-19.9	-14400.0	14400.0	14300.0	-14400.0	13600.0	13400.0	-13500.0	13600.0	-0.600	0.599	0.00019
42:54.2	2180.0	-19.2	-14400.0	14400.0	14300.0	-14400.0	13600.0	13400.0	-13500.0	13600.0	-0.600	0.599	0.00019
43:07.3	2180.0	-20.8	-14400.0	14400.0	14300.0	-14400.0	13600.0	13400.0	-13500.0	13600.0	-0.600	0.599	0.00019
43:20.5	2170.0	-18.7	-14400.0	14400.0	14300.0	-14400.0	13600.0	13400.0	-13500.0	13600.0	-0.600	0.599	0.00019
43:33.6	2170.0	-20.0	-14400.0	14400.0	14300.0	-14400.0	13600.0	13400.0	-13500.0	13600.0	-0.600	0.599	0.00019
43:46.8	2170.0	-19.5	-14400.0	14400.0	14300.0	-14400.0	13600.0	13400.0	-13500.0	13600.0	-0.600	0.599	0.00019
44:00.0	2170.0	-19.7	-14400.0	14400.0	14300.0	-14400.0	13600.0	13400.0	-13500.0	13600.0	-0.600	0.599	0.00019
44:13.1	2160.0	-20.6	-14400.0	14400.0	14300.0	-14400.0	13600.0	13400.0	-13500.0	13600.0	-0.600	0.598	0.00019
44:26.3	2160.0	-19.7	-14400.0	14400.0	14300.0	-14400.0	13600.0	13400.0	-13500.0	13600.0	-0.600	0.598	0.00019
44:39.5	2160.0	-18.5	-14400.0	14400.0	14300.0	-14400.0	13600.0	13400.0	-13500.0	13600.0	-0.600	0.598	0.00019
44:52.6	2160.0	-20.6	-14400.0	14400.0	14300.0	-14400.0	13600.0	13400.0	-13500.0	13600.0	-0.600	0.598	0.00019
45:05.8	2150.0	-19.9	-14400.0	14400.0	14300.0	-14400.0	13600.0	13400.0	-13500.0	13600.0	-0.600	0.598	0.00019
45:18.9	2150.0	-21.7	-14400.0	14400.0	14300.0	-14400.0	13600.0	13400.0	-13500.0	13600.0	-0.600	0.598	0.00019
45:32.1	2150.0	-20.2	-14400.0	14400.0	14300.0	-14400.0	13600.0	13400.0	-13500.0	13600.0	-0.600	0.598	0.00019
45:45.3	2150.0	-21.0	-14400.0	14400.0	14300.0	-14400.0	13600.0	13400.0	-13500.0	13600.0	-0.600	0.598	0.00019
45:58.4	2140.0	-19.7	-14400.0	14400.0	14300.0	-14400.0	13600.0	13400.0	-13500.0	13600.0	-0.600	0.598	0.00019
46:11.6	2130.0	-20.7	-14400.0	14300.0	14100.0	-14000.0	13900.0	13800.0	-13900.0	13900.0	-0.349	0.349	0.00007
46:24.8	56.5	-19.3	-14100.0	14000.0	14000.0	-14000.0	13900.0	13800.0	-13900.0	13900.0	-0.345	0.344	0.00007
46:38.0	55.5	-21.7	-14100.0	14000.0	14000.0	-14000.0	13900.0	13900.0	-13900.0	13900.0	-0.139	0.163	0.00006
46:51.2	56.1	190.0	-14000.0	13900.0	13900.0	-14000.0	14000.0	13900.0	-13900.0	14000.0	-0.037	0.045	0.00005
47:04.3	56.1	227.0	-14000.0	13900.0	13900.0	-14000.0	14000.0	13900.0	-13900.0	14000.0	0.053	-0.049	0.00005
47:17.5	54.3	287.0	-14000.0	13900.0	13900.0	-13900.0	14000.0	13900.0	-13900.0	14000.0	0.141	-0.141	0.00004
47:30.7	53.7	416.0	-14000.0	13900.0	13900.0	-13900.0	14000.0	13900.0	-14000.0	14000.0	0.227	-0.232	0.00003

47:44.0	53.8	539.0	-13900.0	13800.0	13800.0	-13900.0	14000.0	14000.0	-14000.0	14000.0	0.312	-0.321	0.00003
47:57.1	52.8	749.0	-13900.0	13800.0	13800.0	-13800.0	14100.0	14000.0	-14100.0	14100.0	0.394	-0.404	0.00000
48:10.4	54.0	1080.0	-13800.0	13700.0	13700.0	-13700.0	14200.0	14100.0	-14200.0	14200.0	0.474	-0.486	-0.00002
48:23.6	53.1	1500.0	-13700.0	13600.0	13600.0	-13600.0	14300.0	14200.0	-14300.0	14200.0	0.553	-0.566	-0.00004
48:36.8	53.9	1810.0	-13600.0	13500.0	13500.0	-13600.0	14300.0	14300.0	-14300.0	14300.0	0.579	-0.594	-0.00006
48:49.9	54.2	1990.0	-13600.0	13500.0	13500.0	-13500.0	14400.0	14300.0	-14300.0	14300.0	0.606	-0.621	-0.00006
49:03.1	53.4	1970.0	-13600.0	13500.0	13500.0	-13500.0	14400.0	14300.0	-14300.0	14300.0	0.606	-0.621	-0.00006
49:16.3	53.5	1950.0	-13600.0	13500.0	13500.0	-13500.0	14400.0	14300.0	-14300.0	14300.0	0.606	-0.621	-0.00006
49:29.4	53.6	1930.0	-13600.0	13500.0	13500.0	-13500.0	14400.0	14300.0	-14300.0	14300.0	0.606	-0.621	-0.00006
49:42.6	53.3	1920.0	-13600.0	13500.0	13500.0	-13500.0	14400.0	14300.0	-14300.0	14300.0	0.606	-0.621	-0.00006
49:55.8	53.8	1900.0	-13600.0	13500.0	13500.0	-13500.0	14300.0	14300.0	-14300.0	14300.0	0.606	-0.620	0.00004
50:08.9	52.9	-21.9	-14000.0	13900.0	13900.0	-14000.0	14000.0	13900.0	-13900.0	14000.0	0.297	-0.300	0.00006
50:22.1	54.8	-20.6	-14000.0	13900.0	13900.0	-14000.0	14000.0	13900.0	-13900.0	14000.0	0.297	-0.300	0.00006
50:35.3	242.0	-21.3	-14000.0	14000.0	13900.0	-14000.0	13900.0	13800.0	-13900.0	13900.0	0.159	-0.158	0.00007
50:48.6	293.0	-22.2	-14100.0	14000.0	13900.0	-14000.0	13900.0	13800.0	-13900.0	13900.0	0.066	-0.061	0.00007
51:01.8	400.0	-20.3	-14100.0	14000.0	14000.0	-14000.0	13900.0	13800.0	-13900.0	13900.0	-0.024	0.030	0.00008
51:15.0	529.0	-22.2	-14100.0	14000.0	14000.0	-14100.0	13900.0	13800.0	-13800.0	13900.0	-0.112	0.119	0.00009
51:28.2	302.0	-19.4	-14100.0	14000.0	14000.0	-14000.0	13900.0	13800.0	-13900.0	13900.0	-0.218	0.219	0.00008
51:41.4	526.0	-19.2	-14100.0	14100.0	14000.0	-14100.0	13900.0	13800.0	-13800.0	13900.0	-0.310	0.309	0.00010
51:54.6	937.0	-19.7	-14200.0	14200.0	14100.0	-14200.0	13800.0	13700.0	-13700.0	13800.0	-0.397	0.394	0.00012
52:07.7	1400.0	-19.6	-14300.0	14300.0	14200.0	-14300.0	13700.0	13600.0	-13600.0	13700.0	-0.481	0.478	0.00015
52:20.9	1890.0	-17.5	-14400.0	14400.0	14300.0	-14400.0	13600.0	13500.0	-13500.0	13600.0	-0.564	0.560	0.00018
52:34.2	2110.0	-17.0	-14400.0	14400.0	14300.0	-14400.0	13600.0	13400.0	-13500.0	13600.0	-0.582	0.581	0.00018
52:47.4	2170.0	-18.5	-14400.0	14400.0	14300.0	-14400.0	13600.0	13400.0	-13500.0	13600.0	-0.590	0.589	0.00018
53:00.5	2150.0	-22.1	-14400.0	14400.0	14300.0	-14400.0	13600.0	13400.0	-13500.0	13600.0	-0.590	0.589	0.00018

53:13.7	2130.0	-18.8	-14400.0	14400.0	14300.0	-14400.0	13600.0	13400.0	-13500.0	13600.0	-0.590	0.589	0.00018
53:26.8	2110.0	-22.1	-14400.0	14400.0	14300.0	-14400.0	13600.0	13400.0	-13500.0	13600.0	-0.590	0.589	0.00018
53:40.0	2090.0	-22.0	-14400.0	14400.0	14300.0	-14400.0	13600.0	13400.0	-13500.0	13600.0	-0.590	0.588	0.00018
53:53.2	2070.0	-21.0	-14400.0	14400.0	14300.0	-14400.0	13600.0	13400.0	-13500.0	13600.0	-0.590	0.587	0.00018
54:06.3	2050.0	-19.8	-14400.0	14400.0	14300.0	-14400.0	13600.0	13400.0	-13500.0	13600.0	-0.590	0.586	0.00017
54:19.5	2020.0	-17.5	-14400.0	14400.0	14300.0	-14400.0	13600.0	13400.0	-13500.0	13600.0	-0.589	0.585	0.00018
54:32.7	2010.0	-18.8	-14400.0	14400.0	14300.0	-14400.0	13600.0	13400.0	-13500.0	13600.0	-0.588	0.585	0.00018
54:45.8	1990.0	-18.6	-14400.0	14400.0	14300.0	-14400.0	13600.0	13400.0	-13500.0	13600.0	-0.588	0.584	0.00018
54:59.0	1970.0	-16.8	-14400.0	14400.0	14300.0	-14400.0	13600.0	13400.0	-13500.0	13600.0	-0.587	0.583	0.00017
55:12.1	1960.0	-17.5	-14400.0	14400.0	14300.0	-14400.0	13600.0	13400.0	-13500.0	13600.0	-0.586	0.582	0.00017
55:25.3	62.8	-18.4	-14100.0	14000.0	14000.0	-14000.0	13900.0	13800.0	-13900.0	13900.0	-0.349	0.347	0.00006
55:38.5	54.7	-19.4	-14100.0	14000.0	14000.0	-14000.0	13900.0	13800.0	-13900.0	13900.0	-0.346	0.345	0.00006
55:51.7	53.4	172.0	-14000.0	13900.0	13900.0	-14000.0	13900.0	13900.0	-13900.0	13900.0	-0.130	0.138	0.00005
56:04.9	52.8	172.0	-14000.0	13900.0	13900.0	-14000.0	13900.0	13900.0	-13900.0	13900.0	-0.038	0.046	0.00005
56:18.0	53.4	215.0	-14000.0	13900.0	13900.0	-14000.0	14000.0	13900.0	-13900.0	14000.0	0.053	-0.049	0.00005
56:31.2	55.4	289.0	-14000.0	13900.0	13900.0	-13900.0	14000.0	13900.0	-13900.0	14000.0	0.142	-0.142	0.00004
56:44.4	53.2	417.0	-14000.0	13900.0	13900.0	-13900.0	14000.0	13900.0	-14000.0	14000.0	0.229	-0.234	0.00003
56:57.7	54.3	547.0	-13900.0	13800.0	13800.0	-13900.0	14000.0	14000.0	-14000.0	14000.0	0.315	-0.324	0.00002
57:10.8	52.7	704.0	-13900.0	13800.0	13800.0	-13800.0	14100.0	14000.0	-14000.0	14100.0	0.362	-0.375	0.00002
57:24.1	51.8	729.0	-13900.0	13800.0	13800.0	-13800.0	14100.0	14000.0	-14100.0	14100.0	0.389	-0.400	0.00001
57:37.2	54.3	1070.0	-13800.0	13700.0	13700.0	-13700.0	14200.0	14100.0	-14100.0	14200.0	0.470	-0.482	-0.00002
57:50.4	52.4	1380.0	-13700.0	13600.0	13600.0	-13700.0	14200.0	14200.0	-14200.0	14200.0	0.514	-0.529	-0.00003
58:03.6	52.8	1350.0	-13700.0	13600.0	13600.0	-13700.0	14200.0	14200.0	-14200.0	14200.0	0.514	-0.529	-0.00002
58:16.8	53.0	1340.0	-13700.0	13600.0	13600.0	-13700.0	14200.0	14200.0	-14200.0	14200.0	0.514	-0.529	-0.00002
58:30.0	53.1	1340.0	-13700.0	13600.0	13600.0	-13700.0	14200.0	14200.0	-14200.0	14200.0	0.520	-0.533	-0.00004

58:43.1	53.3	1720.0	-13700.0	13500.0	13600.0	-13600.0	14300.0	14300.0	-14300.0	14300.0	0.579	-0.592	-0.00005
58:56.3	52.2	1910.0	-13600.0	13500.0	13500.0	-13500.0	14300.0	14300.0	-14300.0	14300.0	0.601	-0.616	-0.00006
59:09.5	51.2	1970.0	-13600.0	13500.0	13500.0	-13500.0	14400.0	14300.0	-14300.0	14300.0	0.604	-0.619	-0.00006
59:22.6	53.1	1950.0	-13600.0	13500.0	13500.0	-13500.0	14400.0	14300.0	-14300.0	14300.0	0.604	-0.619	-0.00006
59:35.8	52.8	1940.0	-13600.0	13500.0	13500.0	-13500.0	14300.0	14300.0	-14300.0	14300.0	0.604	-0.619	-0.00006
59:48.9	52.7	1930.0	-13600.0	13500.0	13500.0	-13500.0	14300.0	14300.0	-14300.0	14300.0	0.604	-0.619	-0.00006
00:02.1	51.2	1920.0	-13600.0	13500.0	13500.0	-13500.0	14300.0	14300.0	-14300.0	14300.0	0.604	-0.619	-0.00006
00:15.3	51.6	1900.0	-13600.0	13500.0	13500.0	-13500.0	14300.0	14300.0	-14300.0	14300.0	0.604	-0.619	-0.00006
00:28.4	52.3	1890.0	-13600.0	13500.0	13500.0	-13500.0	14300.0	14300.0	-14300.0	14300.0	0.604	-0.618	-0.00006
00:41.6	52.4	1870.0	-13600.0	13500.0	13500.0	-13500.0	14300.0	14300.0	-14300.0	14300.0	0.604	-0.618	-0.00006
00:54.8	50.4	1860.0	-13600.0	13500.0	13500.0	-13500.0	14300.0	14300.0	-14300.0	14300.0	0.604	-0.617	-0.00006
01:07.9	50.0	1840.0	-13600.0	13500.0	13500.0	-13500.0	14300.0	14300.0	-14300.0	14300.0	0.604	-0.616	-0.00006
01:21.1	51.2	1830.0	-13600.0	13500.0	13500.0	-13500.0	14300.0	14300.0	-14300.0	14300.0	0.604	-0.616	-0.00006
01:34.2	50.0	1080.0	-13800.0	13800.0	13800.0	-13900.0	14000.0	13900.0	-13900.0	14000.0	0.297	-0.301	0.00006
01:47.5	50.2	-19.9	-14000.0	13900.0	13900.0	-14000.0	14000.0	13900.0	-13900.0	14000.0	0.296	-0.299	0.00006
02:00.6	50.2	-19.0	-14000.0	13900.0	13900.0	-14000.0	14000.0	13900.0	-13900.0	14000.0	0.296	-0.299	0.00007
02:13.8	272.0	-18.9	-14000.0	14000.0	13900.0	-14000.0	13900.0	13800.0	-13900.0	13900.0	0.080	-0.076	0.00008
02:27.0	377.0	-18.6	-14100.0	14000.0	14000.0	-14000.0	13900.0	13800.0	-13900.0	13900.0	-0.014	0.020	0.00009
02:40.2	510.0	-17.8	-14100.0	14000.0	14000.0	-14100.0	13900.0	13800.0	-13800.0	13900.0	-0.106	0.112	0.00009
02:53.4	289.0	-19.0	-14100.0	14000.0	14000.0	-14000.0	13900.0	13800.0	-13900.0	13900.0	-0.213	0.214	0.00008
03:06.6	510.0	-18.6	-14100.0	14100.0	14000.0	-14100.0	13900.0	13800.0	-13800.0	13900.0	-0.308	0.307	0.00011
03:19.8	942.0	-17.6	-14200.0	14200.0	14100.0	-14200.0	13800.0	13700.0	-13700.0	13800.0	-0.399	0.395	0.00013
03:33.0	1410.0	-16.7	-14300.0	14300.0	14200.0	-14300.0	13700.0	13600.0	-13600.0	13700.0	-0.486	0.482	0.00016
03:46.2	1910.0	-17.8	-14400.0	14400.0	14300.0	-14400.0	13600.0	13500.0	-13500.0	13600.0	-0.571	0.567	0.00018
03:59.3	2060.0	-16.4	-14400.0	14400.0	14300.0	-14400.0	13600.0	13400.0	-13500.0	13600.0	-0.585	0.582	0.00020

04:12.5	2360.0	-16.8	-14500.0	14500.0	14400.0	-14500.0	13500.0	13400.0	-13400.0	13500.0	-0.613	0.612	0.00020
04:25.7	2330.0	-16.6	-14500.0	14500.0	14400.0	-14500.0	13500.0	13400.0	-13400.0	13500.0	-0.613	0.612	0.00020
04:38.8	2310.0	-15.8	-14500.0	14500.0	14400.0	-14500.0	13500.0	13400.0	-13400.0	13500.0	-0.612	0.612	0.00020
04:52.0	2280.0	-17.1	-14500.0	14500.0	14400.0	-14500.0	13600.0	13700.0	-13800.0	13900.0	-0.350	0.349	0.00007
05:05.2	52.5	-16.6	-14100.0	14000.0	14000.0	-14000.0	13900.0	13800.0	-13800.0	13900.0	-0.348	0.347	0.00007
05:18.3	51.6	-16.6	-14100.0	14000.0	14000.0	-14000.0	13900.0	13800.0	-13800.0	13900.0	-0.348	0.347	0.00006
05:31.5	52.6	135.0	-14000.0	14000.0	13900.0	-14000.0	13900.0	13900.0	-13900.0	13900.0	-0.127	0.136	0.00006
05:44.7	50.5	182.0	-14000.0	13900.0	13900.0	-14000.0	13900.0	13900.0	-13900.0	13900.0	-0.032	0.041	0.00005
05:57.9	50.0	223.0	-14000.0	13900.0	13900.0	-14000.0	14000.0	13900.0	-13900.0	14000.0	0.063	-0.058	0.00005
06:11.1	51.5	298.0	-14000.0	13900.0	13900.0	-13900.0	14000.0	13900.0	-13900.0	14000.0	0.154	-0.155	0.00004
06:24.2	51.5	423.0	-14000.0	13900.0	13900.0	-13900.0	14000.0	13900.0	-14000.0	14000.0	0.244	-0.250	0.00003
06:37.5	50.0	555.0	-13900.0	13800.0	13800.0	-13900.0	14000.0	14000.0	-14000.0	14000.0	0.333	-0.342	0.00002
06:50.7	50.8	814.0	-13900.0	13800.0	13800.0	-13800.0	14100.0	14000.0	-14100.0	14100.0	0.419	-0.429	0.00000
07:04.0	51.5	1170.0	-13800.0	13700.0	13700.0	-13700.0	14200.0	14100.0	-14200.0	14200.0	0.496	-0.507	-0.00002
07:17.1	51.5	1600.0	-13700.0	13600.0	13600.0	-13600.0	14300.0	14200.0	-14300.0	14300.0	0.575	-0.588	-0.00005
07:30.3	49.9	1870.0	-13600.0	13500.0	13500.0	-13500.0	14300.0	14300.0	-14300.0	14300.0	0.600	-0.613	-0.00006
07:43.5	51.1	1910.0	-13600.0	13500.0	13500.0	-13500.0	14300.0	14300.0	-14300.0	14300.0	0.600	-0.615	-0.00006
07:56.6	51.5	1900.0	-13600.0	13500.0	13500.0	-13500.0	14300.0	14300.0	-14300.0	14300.0	0.600	-0.615	-0.00006
08:09.8	51.2	1880.0	-13600.0	13500.0	13500.0	-13500.0	14300.0	14300.0	-14300.0	14300.0	0.600	-0.615	-0.00006
08:23.0	50.6	-22.2	-14000.0	13900.0	13900.0	-14000.0	14000.0	13900.0	-13900.0	14000.0	0.296	-0.298	0.00006
08:36.2	49.6	-19.7	-14000.0	13900.0	13900.0	-14000.0	14000.0	13900.0	-13900.0	14000.0	0.295	-0.298	0.00006
08:49.3	50.7	-20.9	-14000.0	13900.0	13900.0	-14000.0	14000.0	13900.0	-13900.0	14000.0	0.295	-0.298	0.00006
09:02.5	205.0	-20.6	-14000.0	14000.0	13900.0	-14000.0	13900.0	13800.0	-13900.0	13900.0	0.197	-0.198	0.00007
09:15.8	249.0	-19.3	-14000.0	14000.0	13900.0	-14000.0	13900.0	13800.0	-13900.0	13900.0	0.097	-0.094	0.00007
09:29.0	346.0	-18.9	-14100.0	14000.0	14000.0	-14000.0	13900.0	13800.0	-13900.0	13900.0	0.001	0.005	0.00008

09:42.2	477.0	-20.5	-14100.0	14000.0	14000.0	-14100.0	13900.0	13800.0	-13800.0	13900.0	-0.093	0.100	0.00009
09:55.4	287.0	-19.1	-14100.0	14000.0	14000.0	-14000.0	13900.0	13800.0	-13900.0	13900.0	-0.202	0.204	0.00008
10:08.6	468.0	-21.5	-14100.0	14100.0	14000.0	-14100.0	13900.0	13800.0	-13800.0	13900.0	-0.301	0.300	0.00010
10:21.8	883.0	-19.0	-14200.0	14100.0	14100.0	-14200.0	13800.0	13700.0	-13700.0	13800.0	-0.395	0.392	0.00012
10:34.9	1370.0	-18.9	-14300.0	14300.0	14200.0	-14300.0	13700.0	13600.0	-13600.0	13700.0	-0.484	0.480	0.00016
10:48.1	1890.0	-19.5	-14400.0	14400.0	14300.0	-14400.0	13600.0	13500.0	-13500.0	13600.0	-0.571	0.568	0.00018
11:01.3	2170.0	-18.8	-14400.0	14400.0	14300.0	-14400.0	13500.0	13400.0	-13500.0	13600.0	-0.605	0.605	0.00019
11:14.5	2250.0	-19.4	-14400.0	14400.0	14400.0	-14400.0	13500.0	13400.0	-13500.0	13600.0	-0.605	0.605	0.00019
11:27.6	2220.0	-19.4	-14400.0	14400.0	14300.0	-14400.0	13500.0	13400.0	-13500.0	13600.0	-0.605	0.605	0.00019
11:40.8	1350.0	-21.7	-14100.0	14000.0	14000.0	-14000.0	13900.0	13800.0	-13800.0	13900.0	-0.350	0.349	0.00007
11:54.0	53.9	-19.6	-14100.0	14000.0	14000.0	-14000.0	13900.0	13800.0	-13800.0	13900.0	-0.349	0.348	0.00007
12:07.2	51.8	-17.7	-14100.0	14000.0	14000.0	-14000.0	13900.0	13800.0	-13800.0	13900.0	-0.348	0.348	0.00006
12:20.3	52.1	135.0	-14000.0	14000.0	13900.0	-14000.0	13900.0	13900.0	-13900.0	13900.0	-0.098	0.107	0.00005
12:33.5	50.9	192.0	-14000.0	13900.0	13900.0	-14000.0	13900.0	13900.0	-13900.0	13900.0	0.001	0.007	0.00005
12:46.7	51.5	226.0	-14000.0	13900.0	13900.0	-13900.0	14000.0	13900.0	-13900.0	14000.0	0.099	-0.095	0.00005
12:59.9	51.7	339.0	-14000.0	13900.0	13900.0	-13900.0	14000.0	13900.0	-13900.0	14000.0	0.193	-0.195	0.00004
13:13.2	51.2	474.0	-13900.0	13900.0	13900.0	-13900.0	14000.0	14000.0	-14000.0	14000.0	0.287	-0.293	0.00003
13:26.3	50.1	666.0	-13900.0	13800.0	13800.0	-13800.0	14100.0	14000.0	-14000.0	14100.0	0.377	-0.386	0.00001
13:39.6	51.3	998.0	-13800.0	13700.0	13700.0	-13700.0	14100.0	14100.0	-14100.0	14100.0	0.466	-0.477	-0.00001
13:52.8	49.4	1390.0	-13700.0	13600.0	13600.0	-13700.0	14200.0	14200.0	-14200.0	14200.0	0.540	-0.552	-0.00003
14:06.0	49.3	1630.0	-13700.0	13600.0	13600.0	-13600.0	14300.0	14200.0	-14300.0	14200.0	0.561	-0.575	-0.00004
14:19.1	49.7	1680.0	-13700.0	13500.0	13600.0	-13600.0	14300.0	14200.0	-14300.0	14300.0	0.569	-0.584	-0.00004
14:32.3	50.1	1770.0	-13700.0	13500.0	13500.0	-13600.0	14300.0	14300.0	-14300.0	14300.0	0.599	-0.611	-0.00006
14:45.5	48.0	1960.0	-13600.0	13500.0	13500.0	-13500.0	14300.0	14300.0	-14300.0	14300.0	0.605	-0.620	-0.00006
14:58.6	47.3	1940.0	-13600.0	13500.0	13500.0	-13500.0	14300.0	14300.0	-14300.0	14300.0	0.606	-0.620	-0.00006

15:11.8	48.6	1920.0	-13600.0	13500.0	13500.0	-13500.0	14300.0	14300.0	-14300.0	14300.0	0.606	-0.620	-0.00006
15:24.9	49.0	1890.0	-13600.0	13500.0	13500.0	-13500.0	14300.0	14300.0	-14300.0	14300.0	0.605	-0.619	0.00000
15:38.1	48.3	-14.1	-14000.0	13900.0	13900.0	-14000.0	14000.0	13900.0	-13900.0	14000.0	0.298	-0.300	0.00006
15:51.3	48.2	-13.4	-14000.0	13900.0	13900.0	-14000.0	14000.0	13900.0	-13900.0	14000.0	0.297	-0.300	0.00006
18:21.3	48.4	-12.7	-14000.0	13900.0	13900.0	-14000.0	14000.0	13900.0	-13900.0	14000.0	0.296	-0.299	0.00005
18:34.5	48.4	-11.8	-14000.0	13900.0	13900.0	-14000.0	14000.0	13900.0	-13900.0	14000.0	0.296	-0.299	0.00005
18:47.6	47.2	-13.0	-14000.0	13900.0	13900.0	-14000.0	14000.0	13900.0	-13900.0	14000.0	0.296	-0.293	0.00005
19:00.8	46.6	-10.8	-14000.0	13900.0	13900.0	-14000.0	14000.0	13900.0	-13900.0	14000.0	0.296	-0.293	0.00005
19:13.9	46.2	-10.2	-14000.0	13900.0	13900.0	-14000.0	14000.0	13900.0	-13900.0	14000.0	0.296	-0.293	0.00005
19:27.1	46.7	-9.9	-14000.0	13900.0	13900.0	-14000.0	14000.0	13900.0	-13900.0	14000.0	0.295	-0.293	0.00005
19:40.3	47.1	-11.6	-14000.0	13900.0	13900.0	-14000.0	14000.0	13900.0	-13900.0	14000.0	0.294	-0.293	0.00006
19:53.4	46.3	-12.1	-14000.0	13900.0	13900.0	-14000.0	14000.0	13900.0	-13900.0	14000.0	0.294	-0.293	0.00005
20:06.6	47.1	-11.1	-14000.0	13900.0	13900.0	-14000.0	14000.0	13900.0	-13900.0	14000.0	0.294	-0.293	0.00005
20:19.8	47.4	-11.6	-14000.0	13900.0	13900.0	-14000.0	14000.0	13900.0	-13900.0	14000.0	0.294	-0.293	0.00005
20:32.9	46.8	-12.5	-14000.0	13900.0	13900.0	-14000.0	14000.0	13900.0	-13900.0	14000.0	0.294	-0.293	0.00006
20:46.1	234.0	-11.0	-14000.0	14000.0	13900.0	-14000.0	13900.0	13800.0	-13900.0	13900.0	0.140	-0.132	0.00007
20:59.4	295.0	-11.9	-14000.0	14000.0	13900.0	-14000.0	13900.0	13800.0	-13900.0	13900.0	0.045	-0.033	0.00007
21:12.6	419.0	-12.4	-14100.0	14000.0	14000.0	-14000.0	13900.0	13800.0	-13800.0	13900.0	-0.048	0.060	0.00008
21:25.8	543.0	-12.2	-14100.0	14100.0	14000.0	-14100.0	13900.0	13800.0	-13800.0	13900.0	-0.144	0.153	0.00007
21:39.0	343.0	-12.8	-14100.0	14000.0	14000.0	-14000.0	13900.0	13800.0	-13900.0	13900.0	-0.249	0.256	0.00008
21:52.2	636.0	-13.1	-14100.0	14100.0	14000.0	-14100.0	13800.0	13700.0	-13800.0	13900.0	-0.339	0.342	0.00011
22:05.4	1050.0	-14.1	-14200.0	14200.0	14100.0	-14200.0	13800.0	13600.0	-13700.0	13800.0	-0.436	0.437	0.00014
22:18.5	1640.0	-12.7	-14300.0	14300.0	14200.0	-14300.0	13700.0	13500.0	-13600.0	13700.0	-0.506	0.510	0.00016
22:31.7	1930.0	-14.3	-14400.0	14400.0	14300.0	-14400.0	13600.0	13400.0	-13500.0	13600.0	-0.580	0.582	0.00019
22:44.9	2520.0	-14.9	-14500.0	14500.0	14400.0	-14500.0	13500.0	13300.0	-13400.0	13500.0	-0.659	0.662	0.00022

22:58.1	2860.0	-15.2	-14600.0	14600.0	14500.0	-14600.0	13400.0	13200.0	-13300.0	13400.0	-0.700	0.705	0.00022
23:11.3	2830.0	-14.7	-14600.0	14600.0	14500.0	-14600.0	13400.0	13200.0	-13300.0	13400.0	-0.706	0.709	0.00024
23:24.4	3090.0	-14.8	-14600.0	14700.0	14500.0	-14600.0	13300.0	13200.0	-13200.0	13400.0	-0.731	0.736	0.00025
23:37.6	3300.0	-14.3	-14700.0	14700.0	14600.0	-14700.0	13300.0	13100.0	-13200.0	13300.0	-0.758	0.763	0.00026
23:50.7	3420.0	-16.0	-14700.0	14700.0	14600.0	-14700.0	13300.0	13100.0	-13100.0	13300.0	-0.775	0.779	0.00026
24:03.9	3530.0	-14.5	-14700.0	14800.0	14600.0	-14700.0	13200.0	13000.0	-13100.0	13200.0	-0.799	0.802	0.00027
24:17.1	3610.0	-13.0	-14700.0	14800.0	14600.0	-14700.0	13200.0	13000.0	-13100.0	13200.0	-0.801	0.805	0.00027
24:30.3	3570.0	-14.2	-14700.0	14800.0	14600.0	-14700.0	13200.0	13000.0	-13100.0	13200.0	-0.801	0.805	0.00027
24:43.4	3530.0	-14.4	-14700.0	14800.0	14600.0	-14700.0	13200.0	13000.0	-13100.0	13200.0	-0.801	0.805	0.00026
24:56.6	3380.0	-16.0	-14300.0	14100.0	14000.0	-14000.0	13800.0	13700.0	-13800.0	13800.0	-0.349	0.355	0.00007
25:09.9	47.9	-15.2	-14100.0	14000.0	14000.0	-14000.0	13800.0	13700.0	-13800.0	13800.0	-0.349	0.354	0.00007
25:23.1	46.7	-15.2	-14100.0	14000.0	14000.0	-14000.0	13800.0	13700.0	-13800.0	13800.0	-0.348	0.353	0.00007
25:36.2	48.0	140.0	-14100.0	14000.0	13900.0	-14000.0	13800.0	13800.0	-13800.0	13800.0	-0.124	0.137	0.00006
25:49.4	44.9	163.0	-14000.0	14000.0	13900.0	-13900.0	13800.0	13800.0	-13800.0	13800.0	-0.043	0.056	0.00005
26:02.6	46.2	209.0	-14000.0	13900.0	13900.0	-13900.0	13900.0	13800.0	-13800.0	13800.0	0.045	-0.034	0.00005
26:15.8	45.8	262.0	-14000.0	13900.0	13900.0	-13900.0	13900.0	13800.0	-13900.0	13800.0	0.131	-0.124	0.00004
26:29.0	46.6	370.0	-14000.0	13900.0	13900.0	-13900.0	13900.0	13900.0	-13900.0	13900.0	0.214	-0.213	0.00004
26:42.2	46.1	496.0	-14000.0	13900.0	13900.0	-13900.0	13900.0	13900.0	-13900.0	13900.0	0.301	-0.304	0.00003
26:55.4	45.3	713.0	-13900.0	13800.0	13800.0	-13800.0	14000.0	13900.0	-14000.0	13900.0	0.388	-0.392	0.00001
27:08.6	45.6	1020.0	-13800.0	13700.0	13700.0	-13700.0	14000.0	14000.0	-14100.0	14000.0	0.473	-0.478	-0.00001
27:21.8	45.3	1400.0	-13700.0	13600.0	13600.0	-13700.0	14100.0	14100.0	-14100.0	14100.0	0.557	-0.563	-0.00004
27:35.0	45.4	1950.0	-13600.0	13500.0	13500.0	-13500.0	14300.0	14300.0	-14300.0	14200.0	0.638	-0.644	-0.00008
27:48.2	45.8	2480.0	-13500.0	13400.0	13400.0	-13400.0	14400.0	14400.0	-14400.0	14300.0	0.706	-0.713	-0.00011
28:01.3	45.3	2970.0	-13400.0	13200.0	13300.0	-13300.0	14500.0	14500.0	-14500.0	14400.0	0.769	-0.778	-0.00013
28:14.5	45.3	3290.0	-13300.0	13100.0	13200.0	-13200.0	14500.0	14600.0	-14600.0	14500.0	0.803	-0.810	-0.00014

28:27.7	42.9	3250.0	-13300.0	13100.0	13200.0	-13200.0	14500.0	14500.0	-14600.0	14500.0	0.803	-0.810	-0.00014
28:40.8	44.6	3210.0	-13300.0	13200.0	13200.0	-13200.0	14500.0	14500.0	-14600.0	14500.0	0.803	-0.810	-0.00014
28:54.0	42.8	3160.0	-13300.0	13200.0	13200.0	-13200.0	14500.0	14500.0	-14600.0	14500.0	0.803	-0.808	-0.00013
29:07.2	42.9	3130.0	-13300.0	13200.0	13200.0	-13200.0	14500.0	14500.0	-14600.0	14500.0	0.803	-0.806	-0.00014
29:20.3	44.5	3090.0	-13300.0	13200.0	13200.0	-13200.0	14500.0	14500.0	-14600.0	14500.0	0.803	-0.805	0.00004
29:33.5	44.4	-17.0	-14000.0	13900.0	13900.0	-14000.0	13900.0	13800.0	-13900.0	13900.0	0.319	-0.317	0.00006
29:46.7	45.6	-16.5	-14000.0	13900.0	13900.0	-14000.0	13900.0	13800.0	-13900.0	13900.0	0.319	-0.316	0.00006
29:59.9	46.2	-17.1	-14000.0	13900.0	13900.0	-14000.0	13900.0	13800.0	-13800.0	13900.0	0.125	-0.116	0.00007
30:13.1	348.0	-15.4	-14000.0	14000.0	13900.0	-14000.0	13800.0	13700.0	-13800.0	13800.0	0.028	-0.016	0.00008
30:26.4	413.0	-17.4	-14100.0	14000.0	13900.0	-14000.0	13800.0	13800.0	-13800.0	13900.0	-0.080	0.089	0.00007
30:39.6	321.0	-17.0	-14000.0	14000.0	13900.0	-14000.0	13800.0	13700.0	-13800.0	13800.0	-0.185	0.192	0.00008
30:52.8	477.0	-16.1	-14100.0	14000.0	14000.0	-14100.0	13800.0	13700.0	-13800.0	13800.0	-0.287	0.290	0.00010
31:06.0	813.0	-18.4	-14100.0	14100.0	14000.0	-14100.0	13700.0	13600.0	-13700.0	13700.0	-0.380	0.383	0.00011
31:19.1	987.0	-18.6	-14200.0	14100.0	14100.0	-14200.0	13700.0	13600.0	-13600.0	13700.0	-0.426	0.427	0.00014
31:32.3	1460.0	-18.3	-14300.0	14300.0	14200.0	-14300.0	13600.0	13500.0	-13500.0	13600.0	-0.516	0.516	0.00016
31:45.5	1970.0	-18.3	-14400.0	14400.0	14300.0	-14400.0	13500.0	13400.0	-13400.0	13500.0	-0.605	0.606	0.00020
31:58.7	2590.0	-17.0	-14500.0	14500.0	14400.0	-14500.0	13400.0	13200.0	-13300.0	13400.0	-0.694	0.695	0.00023
32:11.9	3250.0	-18.5	-14600.0	14700.0	14600.0	-14600.0	13300.0	13100.0	-13200.0	13300.0	-0.757	0.761	0.00026
32:25.1	3440.0	-18.5	-14700.0	14700.0	14600.0	-14700.0	13200.0	13100.0	-13100.0	13200.0	-0.782	0.786	0.00027
32:38.2	3500.0	-20.0	-14700.0	14700.0	14600.0	-14700.0	13200.0	13000.0	-13100.0	13200.0	-0.790	0.794	0.00027
32:51.4	3540.0	-20.6	-14700.0	14700.0	14600.0	-14700.0	13200.0	13000.0	-13100.0	13200.0	-0.794	0.798	0.00027
33:04.6	3510.0	-20.4	-14700.0	14700.0	14600.0	-14700.0	13200.0	13000.0	-13100.0	13200.0	-0.794	0.798	0.00027
33:17.7	3480.0	-21.8	-14700.0	14700.0	14600.0	-14700.0	13200.0	13000.0	-13100.0	13200.0	-0.794	0.798	0.00027
33:30.9	57.9	-21.5	-14100.0	14000.0	14000.0	-14000.0	13800.0	13700.0	-13800.0	13800.0	-0.348	0.354	0.00007
33:44.2	51.3	-20.0	-14100.0	14000.0	14000.0	-14000.0	13800.0	13700.0	-13800.0	13800.0	-0.348	0.353	0.00008

33:57.3	50.8	70.7	-14000.0	14000.0	13900.0	-13900.0	13800.0	13800.0	-13800.0	13800.0	-0.148	0.162	0.00005
34:10.5	49.0	173.0	-14000.0	13900.0	13900.0	-13900.0	13800.0	13800.0	-13800.0	13800.0	-0.049	0.063	0.00006
34:23.7	48.7	216.0	-14000.0	13900.0	13900.0	-13900.0	13800.0	13800.0	-13800.0	13800.0	0.049	-0.038	0.00005
34:36.9	49.3	294.0	-14000.0	13900.0	13900.0	-13900.0	13900.0	13800.0	-13900.0	13800.0	0.145	-0.139	0.00005
34:50.1	48.0	414.0	-14000.0	13900.0	13900.0	-13900.0	13900.0	13900.0	-13900.0	13900.0	0.238	-0.238	0.00003
35:03.3	48.5	550.0	-13900.0	13800.0	13800.0	-13800.0	13900.0	13900.0	-13900.0	13900.0	0.331	-0.334	0.00002
35:16.5	46.8	796.0	-13900.0	13800.0	13800.0	-13800.0	14000.0	14000.0	-14000.0	14000.0	0.420	-0.424	0.00000
35:29.8	47.3	1160.0	-13800.0	13700.0	13700.0	-13700.0	14100.0	14100.0	-14100.0	14000.0	0.509	-0.514	-0.00002
35:43.0	46.8	1580.0	-13700.0	13600.0	13600.0	-13600.0	14200.0	14200.0	-14200.0	14100.0	0.596	-0.601	-0.00005
35:56.2	46.4	2160.0	-13600.0	13400.0	13400.0	-13400.0	14300.0	14300.0	-14300.0	14300.0	0.681	-0.687	-0.00009
36:09.3	45.7	2820.0	-13400.0	13200.0	13300.0	-13300.0	14400.0	14500.0	-14500.0	14400.0	0.767	-0.772	-0.00013
36:22.5	46.0	3070.0	-13400.0	13200.0	13200.0	-13300.0	14500.0	14500.0	-14500.0	14400.0	0.779	-0.787	-0.00013
36:35.6	48.2	3210.0	-13300.0	13200.0	13200.0	-13200.0	14500.0	14500.0	-14600.0	14500.0	0.797	-0.805	-0.00014
36:48.8	48.2	3200.0	-13300.0	13200.0	13200.0	-13200.0	14500.0	14500.0	-14500.0	14500.0	0.797	-0.805	-0.00013
37:02.0	47.5	3170.0	-13300.0	13200.0	13200.0	-13200.0	14500.0	14500.0	-14500.0	14500.0	0.798	-0.805	-0.00014
37:15.1	46.6	2110.0	-13600.0	13600.0	13600.0	-13700.0	14100.0	14000.0	-14000.0	14000.0	0.370	-0.407	0.00006
37:28.3	48.6	-22.6	-14000.0	13900.0	13900.0	-14000.0	13900.0	13800.0	-13900.0	13900.0	0.318	-0.315	0.00006
37:41.5	48.2	-23.8	-14000.0	14000.0	13900.0	-14000.0	13800.0	13800.0	-13800.0	13900.0	0.213	-0.209	0.00007
37:54.8	259.0	-23.0	-14000.0	14000.0	13900.0	-14000.0	13800.0	13800.0	-13800.0	13800.0	0.115	-0.105	0.00008
38:08.0	360.0	-21.9	-14000.0	14000.0	13900.0	-14000.0	13800.0	13700.0	-13800.0	13800.0	0.019	-0.006	0.00009
38:21.2	502.0	-20.4	-14100.0	14000.0	14000.0	-14000.0	13800.0	13700.0	-13800.0	13800.0	-0.082	0.092	0.00008
38:34.4	306.0	-20.3	-14000.0	14000.0	13900.0	-14000.0	13800.0	13700.0	-13800.0	13800.0	-0.189	0.197	0.00008
38:47.6	461.0	-19.0	-14100.0	14000.0	14000.0	-14100.0	13800.0	13700.0	-13800.0	13800.0	-0.288	0.293	0.00010
39:00.8	769.0	-19.5	-14100.0	14100.0	14000.0	-14100.0	13700.0	13600.0	-13700.0	13700.0	-0.384	0.386	0.00012
39:13.9	1190.0	-21.0	-14200.0	14200.0	14100.0	-14200.0	13600.0	13500.0	-13600.0	13600.0	-0.474	0.475	0.00015

39:27.1	1690.0	-21.5	-14300.0	14300.0	14200.0	-14300.0	13500.0	13400.0	-13500.0	13500.0	-0.561	0.563	0.00018
39:40.3	2200.0	-21.6	-14400.0	14400.0	14300.0	-14400.0	13400.0	13300.0	-13400.0	13400.0	-0.643	0.646	0.00021
39:53.5	2850.0	-22.8	-14600.0	14600.0	14500.0	-14600.0	13300.0	13200.0	-13200.0	13300.0	-0.707	0.711	0.00023
40:06.7	2820.0	-22.4	-14600.0	14600.0	14500.0	-14600.0	13300.0	13200.0	-13200.0	13300.0	-0.724	0.727	0.00025
40:19.8	3150.0	-22.7	-14600.0	14600.0	14500.0	-14600.0	13300.0	13100.0	-13200.0	13300.0	-0.750	0.754	0.00025
40:33.0	3390.0	-22.2	-14700.0	14700.0	14600.0	-14700.0	13200.0	13100.0	-13100.0	13200.0	-0.776	0.781	0.00027
40:46.2	3530.0	-21.6	-14700.0	14700.0	14600.0	-14700.0	13200.0	13000.0	-13100.0	13200.0	-0.797	0.801	0.00027
40:59.4	3530.0	-20.6	-14700.0	14700.0	14600.0	-14700.0	13200.0	13000.0	-13100.0	13200.0	-0.797	0.801	0.00027
41:12.5	3500.0	-21.3	-14700.0	14700.0	14600.0	-14700.0	13200.0	13000.0	-13100.0	13200.0	-0.797	0.801	0.00027
41:25.7	3460.0	-21.9	-14700.0	14700.0	14600.0	-14700.0	13200.0	13000.0	-13100.0	13200.0	-0.796	0.800	0.00026
41:38.9	3410.0	-21.7	-14700.0	14700.0	14600.0	-14700.0	13200.0	13100.0	-13100.0	13200.0	-0.796	0.798	0.00026
41:52.0	3370.0	-20.9	-14700.0	14700.0	14600.0	-14700.0	13200.0	13100.0	-13100.0	13200.0	-0.791	0.794	0.00026
42:05.2	3280.0	-20.7	-14700.0	14700.0	14600.0	-14700.0	13200.0	13100.0	-13100.0	13200.0	-0.789	0.792	0.00026
42:18.3	3250.0	-21.0	-14700.0	14700.0	14600.0	-14700.0	13200.0	13100.0	-13100.0	13200.0	-0.593	0.705	0.00007
42:31.6	52.9	-20.3	-14100.0	14000.0	14000.0	-14000.0	13800.0	13700.0	-13800.0	13800.0	-0.350	0.356	0.00007
42:44.8	51.1	-21.5	-14100.0	14000.0	14000.0	-14000.0	13800.0	13700.0	-13800.0	13800.0	-0.350	0.355	0.00007
42:58.0	50.1	-22.2	-14100.0	14000.0	14000.0	-14000.0	13800.0	13700.0	-13800.0	13800.0	-0.349	0.355	0.00007
43:11.1	49.2	-23.3	-14100.0	14000.0	14000.0	-14000.0	13800.0	13700.0	-13800.0	13800.0	-0.318	0.355	0.00006
43:24.3	48.7	156.0	-14000.0	13900.0	13900.0	-13900.0	13800.0	13800.0	-13800.0	13800.0	-0.066	0.081	0.00006
43:37.5	49.1	200.0	-14000.0	13900.0	13900.0	-13900.0	13800.0	13800.0	-13800.0	13800.0	0.033	-0.021	0.00005
43:50.7	50.5	259.0	-14000.0	13900.0	13900.0	-13900.0	13900.0	13800.0	-13800.0	13800.0	0.130	-0.123	0.00004
44:03.9	49.9	378.0	-14000.0	13900.0	13900.0	-13900.0	13900.0	13900.0	-13900.0	13900.0	0.224	-0.223	0.00004
44:17.1	49.1	518.0	-13900.0	13800.0	13800.0	-13800.0	13900.0	13900.0	-13900.0	13900.0	0.317	-0.321	0.00003
44:30.3	49.0	746.0	-13900.0	13800.0	13800.0	-13800.0	14000.0	14000.0	-14000.0	13900.0	0.407	-0.412	0.00000
44:43.6	49.0	1100.0	-13800.0	13700.0	13700.0	-13700.0	14000.0	14000.0	-14100.0	14000.0	0.497	-0.503	-0.00002

44:56.7	47.9	1510.0	-13700.0	13600.0	13600.0	-13600.0	14100.0	14100.0	-14200.0	14100.0	0.587	-0.591	-0.00005
45:09.9	49.9	2070.0	-13600.0	13400.0	13500.0	-13500.0	14300.0	14300.0	-14300.0	14200.0	0.673	-0.678	-0.00008
45:23.1	48.9	2590.0	-13500.0	13300.0	13300.0	-13300.0	14400.0	14400.0	-14400.0	14400.0	0.742	-0.746	-0.00012
45:36.3	48.8	3080.0	-13400.0	13200.0	13200.0	-13200.0	14500.0	14500.0	-14500.0	14400.0	0.782	-0.789	-0.00012
45:49.4	48.0	3180.0	-13300.0	13200.0	13200.0	-13200.0	14500.0	14500.0	-14500.0	14500.0	0.797	-0.804	-0.00013
46:02.6	49.7	3180.0	-13300.0	13200.0	13200.0	-13200.0	14500.0	14500.0	-14500.0	14500.0	0.797	-0.804	-0.00013
46:15.7	48.0	3150.0	-13300.0	13200.0	13200.0	-13200.0	14500.0	14500.0	-14500.0	14500.0	0.797	-0.804	-0.00013
46:28.9	48.9	3110.0	-13300.0	13200.0	13200.0	-13200.0	14500.0	14500.0	-14500.0	14500.0	0.797	-0.803	-0.00013
46:42.1	50.1	2440.0	-13500.0	13500.0	13600.0	-13700.0	14100.0	14000.0	-14000.0	14000.0	0.396	-0.432	0.00006
46:55.3	49.6	-24.7	-14000.0	13900.0	13900.0	-14000.0	13900.0	13800.0	-13900.0	13900.0	0.318	-0.315	0.00006
47:08.4	50.2	-24.6	-14000.0	13900.0	13900.0	-14000.0	13900.0	13800.0	-13900.0	13900.0	0.318	-0.315	0.00006
47:21.6	48.2	-23.8	-14000.0	13900.0	13900.0	-14000.0	13900.0	13800.0	-13900.0	13900.0	0.317	-0.315	0.00006
47:34.8	49.1	-25.1	-14000.0	13900.0	13900.0	-14000.0	13900.0	13800.0	-13900.0	13900.0	0.317	-0.314	0.00007
47:48.0	253.0	-23.8	-14000.0	14000.0	13900.0	-14000.0	13800.0	13800.0	-13800.0	13800.0	0.128	-0.120	0.00008
48:01.2	329.0	-25.8	-14000.0	14000.0	13900.0	-14000.0	13800.0	13700.0	-13800.0	13800.0	0.032	-0.019	0.00008
48:14.5	457.0	-25.0	-14100.0	14000.0	14000.0	-14000.0	13800.0	13700.0	-13800.0	13800.0	-0.068	0.079	0.00008
48:27.7	316.0	-24.6	-14000.0	14000.0	13900.0	-14000.0	13800.0	13700.0	-13800.0	13800.0	-0.179	0.187	0.00008
48:40.9	458.0	-25.4	-14100.0	14000.0	14000.0	-14100.0	13800.0	13700.0	-13800.0	13800.0	-0.279	0.284	0.00010
48:54.0	772.0	-24.2	-14100.0	14100.0	14000.0	-14100.0	13700.0	13600.0	-13700.0	13700.0	-0.374	0.377	0.00012
49:07.2	1170.0	-24.5	-14200.0	14200.0	14100.0	-14200.0	13600.0	13500.0	-13600.0	13600.0	-0.465	0.467	0.00015
49:20.4	1660.0	-25.1	-14300.0	14300.0	14200.0	-14300.0	13500.0	13400.0	-13500.0	13500.0	-0.554	0.556	0.00017
49:33.6	2190.0	-24.1	-14400.0	14400.0	14300.0	-14400.0	13400.0	13300.0	-13400.0	13400.0	-0.643	0.646	0.00021
49:46.8	2860.0	-22.9	-14600.0	14600.0	14500.0	-14600.0	13300.0	13200.0	-13200.0	13300.0	-0.734	0.737	0.00025
49:59.9	3260.0	-24.3	-14600.0	14700.0	14600.0	-14600.0	13200.0	13100.0	-13100.0	13300.0	-0.765	0.770	0.00025
50:13.1	3240.0	-23.7	-14600.0	14700.0	14600.0	-14700.0	13200.0	13100.0	-13100.0	13200.0	-0.781	0.786	0.00026

50:26.3	3410.0	-24.1	-14700.0	-14700.0	-14600.0	-14700.0	-13200.0	-13100.0	-13100.0	-13200.0	-0.784	0.789	0.00026
50:39.5	3580.0	-23.5	-14700.0	-14700.0	-14600.0	-14700.0	-13200.0	-13000.0	-13100.0	-13200.0	-0.802	0.807	0.00027
50:52.6	3550.0	-26.5	-14700.0	-14700.0	-14600.0	-14700.0	-13200.0	-13000.0	-13100.0	-13200.0	-0.802	0.807	0.00027
51:05.8	3520.0	-23.7	-14700.0	-14700.0	-14600.0	-14700.0	-13200.0	-13000.0	-13100.0	-13200.0	-0.802	0.807	0.00027
51:19.0	3480.0	-24.6	-14700.0	-14700.0	-14600.0	-14700.0	-13200.0	-13000.0	-13100.0	-13200.0	-0.802	0.806	0.00027
51:32.1	3430.0	-23.3	-14700.0	-14700.0	-14600.0	-14700.0	-13200.0	-13400.0	-13600.0	-13700.0	-0.355	0.391	0.00007
51:45.4	53.9	-23.4	-14100.0	-14000.0	-14000.0	-14000.0	-13800.0	-13700.0	-13800.0	-13800.0	-0.350	0.356	0.00007
51:58.6	54.3	-22.7	-14100.0	-14000.0	-14000.0	-14000.0	-13800.0	-13700.0	-13800.0	-13800.0	-0.350	0.355	0.00007
52:11.7	50.8	-23.7	-14100.0	-14000.0	-14000.0	-14000.0	-13800.0	-13700.0	-13800.0	-13800.0	-0.350	0.355	0.00007
52:24.9	52.1	141.0	-14000.0	-13900.0	-13900.0	-13900.0	-13800.0	-13800.0	-13800.0	-13800.0	-0.112	0.126	0.00006
52:38.1	51.3	183.0	-14000.0	-13900.0	-13900.0	-13900.0	-13800.0	-13800.0	-13800.0	-13800.0	-0.015	0.029	0.00006
52:51.3	51.2	229.0	-14000.0	-13900.0	-13900.0	-13900.0	-13800.0	-13800.0	-13800.0	-13800.0	0.080	-0.071	0.00005
53:04.5	51.3	324.0	-14000.0	-13900.0	-13900.0	-13900.0	-13900.0	-13800.0	-13900.0	-13800.0	0.172	-0.168	0.00004
53:17.6	50.1	442.0	-13900.0	-13800.0	-13800.0	-13800.0	-13900.0	-13900.0	-13900.0	-13900.0	0.262	-0.264	0.00003
53:30.9	51.6	618.0	-13900.0	-13800.0	-13800.0	-13800.0	-13900.0	-13900.0	-13900.0	-13900.0	0.351	-0.356	0.00002
53:44.1	50.1	877.0	-13800.0	-13700.0	-13700.0	-13700.0	-14000.0	-14000.0	-14000.0	-14000.0	0.438	-0.444	0.00000
53:57.3	51.8	1240.0	-13800.0	-13600.0	-13700.0	-13600.0	-14100.0	-14100.0	-14100.0	-14000.0	0.526	-0.531	-0.00003
54:10.5	51.3	1680.0	-13700.0	-13500.0	-13600.0	-13500.0	-14200.0	-14200.0	-14200.0	-14200.0	0.611	-0.616	-0.00006
54:23.7	51.0	2240.0	-13500.0	-13400.0	-13400.0	-13400.0	-14300.0	-14300.0	-14300.0	-14300.0	0.693	-0.700	-0.00008
54:36.9	50.2	2470.0	-13500.0	-13300.0	-13400.0	-13400.0	-14300.0	-14400.0	-14400.0	-14300.0	0.726	-0.730	-0.00010
54:50.0	50.8	2930.0	-13400.0	-13200.0	-13300.0	-13300.0	-14400.0	-14500.0	-14500.0	-14400.0	0.762	-0.769	-0.00012
55:03.2	51.2	3190.0	-13300.0	-13200.0	-13200.0	-13200.0	-14500.0	-14500.0	-14500.0	-14400.0	0.794	-0.801	-0.00013
55:16.3	51.0	3170.0	-13300.0	-13200.0	-13200.0	-13200.0	-14500.0	-14500.0	-14500.0	-14400.0	0.794	-0.801	-0.00013
55:29.5	50.7	3150.0	-13300.0	-13200.0	-13200.0	-13200.0	-14500.0	-14500.0	-14500.0	-14400.0	0.794	-0.801	-0.00013
55:42.7	51.3	3140.0	-13300.0	-13200.0	-13200.0	-13200.0	-14500.0	-14500.0	-14500.0	-14400.0	0.794	-0.801	-0.00013

55:55.8	50.1	3100.0	-13400.0	13300.0	13400.0	-13600.0	14200.0	14000.0	-14100.0	14000.0	0.465	-0.501	0.00006
56:09.0	52.3	-26.5	-14000.0	13900.0	13900.0	-14000.0	13900.0	13800.0	-13900.0	13900.0	0.320	-0.317	0.00006
05:35.4	47.4	-35.5	-14000.0	13900.0	13900.0	-14000.0	13900.0	13800.0	-13900.0	13900.0	0.308	-0.308	0.00005
05:49.6	46.3	-36.5	-14000.0	13900.0	13900.0	-14000.0	13900.0	13800.0	-13900.0	13900.0	0.308	-0.308	0.00005
06:02.8	44.8	-36.8	-14000.0	13900.0	13900.0	-14000.0	13900.0	13800.0	-13900.0	13900.0	0.308	-0.308	0.00006
06:15.9	246.0	-35.1	-14000.0	14000.0	13900.0	-14000.0	13800.0	13800.0	-13800.0	13900.0	0.150	-0.140	0.00006
06:29.2	241.0	-36.7	-14000.0	14000.0	13900.0	-14000.0	13800.0	13800.0	-13800.0	13900.0	0.150	-0.140	0.00006
06:42.3	240.0	-37.5	-14000.0	14000.0	13900.0	-14000.0	13800.0	13800.0	-13800.0	13900.0	0.150	-0.140	0.00006
06:55.5	239.0	-35.9	-14000.0	14000.0	13900.0	-14000.0	13800.0	13800.0	-13800.0	13900.0	0.150	-0.140	0.00006
07:08.7	238.0	-37.0	-14000.0	14000.0	13900.0	-14000.0	13800.0	13800.0	-13800.0	13900.0	0.139	-0.128	0.00007
07:21.8	304.0	-36.9	-14000.0	14000.0	13900.0	-14000.0	13800.0	13700.0	-13800.0	13800.0	0.051	-0.037	0.00008
07:35.0	464.0	-36.3	-14100.0	14000.0	14000.0	-14100.0	13800.0	13700.0	-13800.0	13800.0	-0.034	0.049	0.00008
07:48.3	267.0	-36.2	-14000.0	14000.0	13900.0	-14000.0	13800.0	13800.0	-13800.0	13800.0	-0.136	0.145	0.00007
08:01.5	304.0	-36.7	-14000.0	14000.0	13900.0	-14000.0	13800.0	13700.0	-13800.0	13800.0	-0.166	0.176	0.00007
08:14.7	303.0	-35.0	-14000.0	14000.0	13900.0	-14000.0	13800.0	13700.0	-13800.0	13800.0	-0.166	0.176	0.00007
08:27.8	301.0	-36.9	-14000.0	14000.0	13900.0	-14000.0	13800.0	13700.0	-13800.0	13800.0	-0.166	0.176	0.00007
08:41.0	303.0	-37.2	-14000.0	14000.0	13900.0	-14000.0	13800.0	13700.0	-13800.0	13800.0	-0.168	0.176	0.00007
08:54.1	356.0	-35.2	-14100.0	14000.0	13900.0	-14000.0	13800.0	13700.0	-13800.0	13800.0	-0.168	0.226	0.00008
09:07.3	500.0	-37.2	-14100.0	14000.0	14000.0	-14100.0	13800.0	13700.0	-13700.0	13800.0	-0.168	0.311	0.00010
09:20.5	809.0	-36.6	-14100.0	14100.0	14000.0	-14100.0	13700.0	13600.0	-13700.0	13700.0	-0.168	0.370	0.00011
09:33.6	971.0	-36.3	-14200.0	14100.0	14100.0	-14200.0	13700.0	13600.0	-13600.0	13700.0	-0.168	0.425	0.00013
09:46.8	1420.0	-36.4	-14300.0	14300.0	14200.0	-14300.0	13600.0	13500.0	-13500.0	13600.0	-0.168	0.510	0.00016
10:00.0	1910.0	-37.3	-14400.0	14400.0	14300.0	-14400.0	13500.0	13400.0	-13400.0	13500.0	-0.168	0.599	0.00019
10:13.2	2530.0	-36.3	-14500.0	14500.0	14400.0	-14500.0	13400.0	13200.0	-13300.0	13400.0	-0.168	0.688	0.00023
10:26.4	3190.0	-35.9	-14600.0	14700.0	14500.0	-14700.0	13200.0	13100.0	-13100.0	13200.0	-0.168	0.777	0.00027

10:39.6	3920.0	-35.4	-14800.0	14800.0	14700.0	-14800.0	13100.0	12900.0	-13000.0	13100.0	-0.168	0.866	0.00031
10:52.7	4610.0	-35.5	-14900.0	15000.0	14900.0	-15000.0	12900.0	12700.0	-12800.0	12900.0	-0.168	0.953	0.00036
11:05.9	5280.0	-34.9	-15100.0	15200.0	15000.0	-15100.0	12700.0	12600.0	-12600.0	12700.0	-0.168	1.030	0.00038
11:19.1	5690.0	-35.1	-15200.0	15300.0	15100.0	-15200.0	12600.0	12500.0	-12500.0	12600.0	-0.168	1.070	0.00041
11:32.2	6020.0	-32.9	-15300.0	15300.0	15200.0	-15300.0	12500.0	12400.0	-12400.0	12500.0	-0.168	1.120	0.00043
11:45.4	6370.0	-36.4	-15300.0	15400.0	15200.0	-15300.0	12400.0	12300.0	-12300.0	12400.0	-0.168	1.170	0.00044
11:58.6	6660.0	-34.2	-15400.0	15500.0	15300.0	-15400.0	12300.0	12200.0	-12200.0	12300.0	-0.168	1.210	0.00045
12:11.7	6600.0	-36.7	-15400.0	15500.0	15300.0	-15400.0	12300.0	12200.0	-12200.0	12300.0	-0.168	1.210	0.00046
12:24.9	6580.0	-37.0	-15400.0	15500.0	15300.0	-15400.0	12300.0	12200.0	-12200.0	12300.0	-0.168	1.210	0.00045
12:38.0	6570.0	-37.3	-15400.0	15500.0	15300.0	-15400.0	12300.0	12200.0	-12200.0	12300.0	-0.168	1.210	0.00045
12:51.2	6560.0	-36.0	-15400.0	15500.0	15300.0	-15400.0	12300.0	12200.0	-12200.0	12300.0	-0.168	1.210	0.00045
13:04.4	6550.0	-37.5	-15400.0	15500.0	15300.0	-15400.0	12300.0	12200.0	-12200.0	12300.0	-0.168	1.210	0.00045
13:17.5	6540.0	-37.0	-15400.0	15500.0	15300.0	-15400.0	12300.0	12200.0	-12200.0	12300.0	-0.168	1.210	0.00045
13:30.7	6540.0	-37.8	-15400.0	15500.0	15300.0	-15400.0	12300.0	12200.0	-12200.0	12300.0	-0.168	1.210	0.00045
13:43.8	6530.0	-37.6	-15400.0	15500.0	15300.0	-15400.0	12300.0	12200.0	-12200.0	12300.0	-0.168	1.210	0.00045
13:57.0	6530.0	-37.1	-15400.0	15500.0	15300.0	-15400.0	12300.0	12200.0	-12200.0	12300.0	-0.168	1.210	0.00045
14:10.2	6520.0	-37.2	-15400.0	15500.0	15300.0	-15400.0	12300.0	12200.0	-12200.0	12300.0	-0.168	1.210	0.00045
14:23.3	6510.0	-39.0	-15400.0	15500.0	15300.0	-15400.0	12300.0	12200.0	-12200.0	12300.0	-0.168	1.210	0.00045
14:36.5	6470.0	-36.7	-15400.0	15500.0	15300.0	-15400.0	12300.0	12200.0	-12200.0	12300.0	-0.168	1.210	0.00045
14:49.7	6420.0	-36.8	-15400.0	15500.0	15300.0	-15400.0	12300.0	12200.0	-12200.0	12300.0	-0.168	1.200	0.00008
15:02.8	46.6	-35.3	-14100.0	14000.0	14000.0	-14000.0	13500.0	13600.0	-13600.0	13500.0	-0.168	0.382	0.00008
15:16.1	44.5	-35.1	-14100.0	14000.0	14000.0	-14000.0	13500.0	13600.0	-13600.0	13500.0	-0.168	0.382	0.00008
15:29.2	44.2	-37.3	-14100.0	14000.0	14000.0	-14000.0	13500.0	13600.0	-13600.0	13500.0	-0.168	0.381	0.00008
15:42.4	41.6	106.0	-14000.0	14000.0	13900.0	-13900.0	13600.0	13600.0	-13600.0	13500.0	-0.168	0.201	0.00006
15:55.6	41.6	125.0	-14000.0	13900.0	13900.0	-13900.0	13600.0	13600.0	-13600.0	13500.0	-0.168	0.178	0.00007

16:08.8	41.5	163.0	-14000.0	13900.0	13900.0	-13900.0	13600.0	13600.0	-13600.0	13500.0	-0.119	0.125	0.00006
16:22.0	41.6	171.0	-14000.0	13900.0	13900.0	-13900.0	13600.0	13600.0	-13600.0	13500.0	-0.069	0.074	0.00006
16:35.1	42.1	180.0	-14000.0	13900.0	13900.0	-13900.0	13600.0	13600.0	-13600.0	13600.0	-0.040	0.044	0.00006
16:48.3	40.3	181.0	-14000.0	13900.0	13900.0	-13900.0	13600.0	13600.0	-13600.0	13600.0	-0.040	0.043	0.00006
17:01.5	39.6	180.0	-14000.0	13900.0	13900.0	-13900.0	13600.0	13600.0	-13600.0	13600.0	-0.040	0.043	0.00006
17:14.6	40.8	200.0	-14000.0	13900.0	13900.0	-13900.0	13600.0	13600.0	-13700.0	13600.0	0.008	0.043	0.00006
17:27.8	39.3	267.0	-14000.0	13900.0	13900.0	-13900.0	13600.0	13700.0	-13700.0	13600.0	0.106	0.043	0.00005
17:41.0	38.8	395.0	-14000.0	13900.0	13900.0	-13900.0	13600.0	13700.0	-13700.0	13600.0	0.202	0.043	0.00005
17:54.2	39.5	552.0	-13900.0	13800.0	13800.0	-13800.0	13700.0	13700.0	-13800.0	13600.0	0.295	0.043	0.00003
18:07.4	39.0	799.0	-13900.0	13700.0	13800.0	-13800.0	13700.0	13800.0	-13800.0	13700.0	0.383	0.043	0.00001
18:20.6	38.3	1160.0	-13800.0	13700.0	13700.0	-13700.0	13800.0	13900.0	-13900.0	13800.0	0.475	0.043	-0.00001
18:33.8	39.9	1550.0	-13700.0	13600.0	13600.0	-13600.0	13900.0	14000.0	-14000.0	13900.0	0.564	0.043	-0.00004
18:47.0	39.3	2130.0	-13600.0	13400.0	13400.0	-13400.0	14000.0	14100.0	-14100.0	14000.0	0.652	0.043	-0.00008
19:00.2	39.9	2810.0	-13400.0	13300.0	13300.0	-13300.0	14200.0	14300.0	-14300.0	14100.0	0.739	0.043	-0.00012
19:13.4	38.9	3530.0	-13300.0	13100.0	13100.0	-13100.0	14300.0	14500.0	-14500.0	14300.0	0.827	0.043	-0.00017
19:26.5	38.8	4230.0	-13100.0	12900.0	13000.0	-13000.0	14500.0	14600.0	-14600.0	14500.0	0.913	0.043	-0.00021
19:39.7	38.8	4930.0	-12900.0	12700.0	12800.0	-12800.0	14600.0	14800.0	-14800.0	14600.0	1.000	0.043	-0.00025
19:52.9	40.7	5630.0	-12800.0	12500.0	12600.0	-12600.0	14800.0	14900.0	-14900.0	14700.0	1.090	0.043	-0.00029
20:06.1	40.1	6010.0	-12700.0	12400.0	12600.0	-12500.0	14800.0	15000.0	-15000.0	14800.0	1.120	0.043	-0.00029
20:19.3	39.4	5970.0	-12700.0	12400.0	12600.0	-12500.0	14800.0	15000.0	-15000.0	14800.0	1.120	0.043	-0.00029
20:32.4	38.5	5950.0	-12700.0	12400.0	12600.0	-12500.0	14800.0	15000.0	-15000.0	14800.0	1.130	0.043	-0.00031
20:45.6	40.7	6450.0	-12600.0	12300.0	12500.0	-12400.0	14900.0	15100.0	-15100.0	14900.0	1.170	0.043	-0.00032
20:58.8	37.7	6610.0	-12500.0	12300.0	12400.0	-12400.0	14900.0	15100.0	-15100.0	14900.0	1.200	0.043	-0.00032
21:12.0	38.9	6570.0	-12500.0	12300.0	12400.0	-12400.0	14900.0	15100.0	-15100.0	14900.0	1.200	0.043	-0.00032
21:25.1	38.5	6550.0	-12500.0	12300.0	12400.0	-12400.0	14900.0	15100.0	-15100.0	14900.0	1.200	0.043	-0.00032

21:38.3	39.8	6530.0	-12500.0	12300.0	12400.0	-12400.0	14900.0	15100.0	-15100.0	14900.0	1.200	0.043	-0.00032
21:51.5	38.3	6520.0	-12500.0	12300.0	12400.0	-12400.0	14900.0	15100.0	-15100.0	14900.0	1.200	0.043	-0.00032
22:04.6	39.4	6510.0	-12500.0	12300.0	12400.0	-12400.0	14900.0	15100.0	-15100.0	14900.0	1.200	0.043	-0.00032
22:17.8	38.4	6450.0	-12500.0	12300.0	12400.0	-12400.0	14900.0	15100.0	-15100.0	14900.0	1.200	0.043	-0.00032
22:30.9	37.7	6390.0	-12500.0	12300.0	12400.0	-12400.0	14900.0	15100.0	-15100.0	14900.0	1.200	0.043	-0.00032
22:44.1	38.9	4500.0	-12900.0	12700.0	12800.0	-12800.0	14600.0	14700.0	-14800.0	14600.0	1.040	0.043	0.00002
22:57.4	39.2	-37.3	-13800.0	13800.0	13800.0	-13800.0	13600.0	13700.0	-13700.0	13700.0	0.329	0.043	0.00006
23:10.6	37.0	-34.3	-13800.0	13800.0	13800.0	-13800.0	13600.0	13700.0	-13700.0	13700.0	0.329	0.043	0.00006
23:23.7	274.0	-32.8	-13900.0	13900.0	13800.0	-13900.0	13600.0	13600.0	-13600.0	13600.0	0.134	0.043	0.00008
23:37.1	367.0	-33.1	-13900.0	13900.0	13800.0	-13900.0	13600.0	13600.0	-13600.0	13600.0	0.068	0.043	0.00008
23:50.3	420.0	-34.6	-13900.0	13900.0	13800.0	-13900.0	13600.0	13600.0	-13600.0	13600.0	0.046	0.043	0.00009
24:03.4	448.0	-34.0	-13900.0	13900.0	13800.0	-13900.0	13600.0	13600.0	-13600.0	13600.0	0.034	0.043	0.00009
24:16.6	441.0	-34.1	-13900.0	13900.0	13800.0	-13900.0	13600.0	13600.0	-13600.0	13600.0	0.033	0.043	0.00009
24:29.8	438.0	-34.5	-13900.0	13900.0	13800.0	-13900.0	13600.0	13600.0	-13600.0	13600.0	0.029	-0.025	0.00009
24:43.0	480.0	-33.3	-13900.0	13900.0	13800.0	-13900.0	13500.0	13600.0	-13600.0	13600.0	0.030	0.004	0.00008
24:56.1	316.0	-31.8	-13900.0	13900.0	13800.0	-13900.0	13600.0	13600.0	-13600.0	13600.0	0.030	0.111	0.00009
25:09.4	397.0	-32.1	-13900.0	13900.0	13800.0	-13900.0	13600.0	13600.0	-13600.0	13600.0	0.030	0.213	0.00010
25:22.6	589.0	-31.3	-14000.0	13900.0	13900.0	-13900.0	13500.0	13500.0	-13500.0	13500.0	0.030	0.317	0.00011
25:35.7	813.0	-31.6	-14000.0	14000.0	13900.0	-14000.0	13500.0	13500.0	-13500.0	13500.0	0.030	0.389	0.00013
25:48.9	1200.0	-31.4	-14100.0	14100.0	14000.0	-14100.0	13400.0	13400.0	-13400.0	13400.0	0.030	0.483	0.00016
26:02.1	1690.0	-31.1	-14200.0	14200.0	14100.0	-14200.0	13300.0	13300.0	-13300.0	13300.0	0.030	0.576	0.00018
26:15.2	2180.0	-31.6	-14300.0	14300.0	14200.0	-14300.0	13200.0	13200.0	-13200.0	13200.0	0.030	0.670	0.00022
26:28.4	2800.0	-32.4	-14400.0	14500.0	14400.0	-14400.0	13100.0	13000.0	-13000.0	13100.0	0.030	0.758	0.00026
26:41.7	3530.0	-31.3	-14600.0	14600.0	14500.0	-14600.0	12900.0	12800.0	-12900.0	12900.0	0.030	0.851	0.00030
26:54.8	4270.0	-29.8	-14800.0	14800.0	14700.0	-14700.0	12800.0	12700.0	-12700.0	12800.0	0.030	0.944	0.00035

27:08.0	5030.0	-32.6	-14900.0	15000.0	14800.0	-14900.0	12600.0	12500.0	-12500.0	12600.0	0.030	1.040	0.00039
27:21.1	5790.0	-31.6	-15100.0	15200.0	15000.0	-15100.0	12400.0	12300.0	-12300.0	12400.0	0.030	1.130	0.00044
27:34.3	6460.0	-30.2	-15200.0	15400.0	15200.0	-15200.0	12300.0	12200.0	-12200.0	12300.0	0.030	1.200	0.00045
27:47.5	6460.0	-31.5	-15200.0	15300.0	15200.0	-15200.0	12300.0	12200.0	-12200.0	12300.0	0.030	1.200	0.00045
28:00.6	6450.0	-32.6	-15200.0	15300.0	15200.0	-15200.0	12300.0	12200.0	-12200.0	12300.0	0.030	1.200	0.00045
28:13.8	6420.0	-32.1	-15200.0	15300.0	15100.0	-15200.0	12300.0	12200.0	-12200.0	12300.0	0.030	1.200	0.00045
28:27.0	6360.0	-30.9	-15200.0	15300.0	15100.0	-15200.0	12300.0	12200.0	-12200.0	12300.0	0.030	1.200	0.00044
28:40.1	48.3	-33.2	-13900.0	13900.0	13900.0	-13800.0	13500.0	13500.0	-13500.0	13500.0	0.030	0.368	0.00008
28:53.7	42.6	-31.6	-13900.0	13900.0	13900.0	-13800.0	13500.0	13500.0	-13500.0	13500.0	0.030	0.367	0.00007
29:06.9	41.9	-31.7	-13900.0	13900.0	13800.0	-13800.0	13500.0	13600.0	-13600.0	13500.0	0.030	0.120	0.00006
29:20.1	41.1	184.0	-13900.0	13800.0	13800.0	-13800.0	13500.0	13600.0	-13600.0	13500.0	0.030	0.025	0.00006
29:33.2	40.7	218.0	-13900.0	13800.0	13800.0	-13800.0	13600.0	13600.0	-13600.0	13500.0	0.085	-0.079	0.00006
29:46.5	40.8	234.0	-13900.0	13800.0	13800.0	-13700.0	13600.0	13600.0	-13600.0	13500.0	0.089	-0.086	0.00005
29:59.6	39.4	229.0	-13900.0	13800.0	13800.0	-13700.0	13600.0	13600.0	-13600.0	13500.0	0.087	-0.086	0.00006
30:12.8	38.1	227.0	-13900.0	13800.0	13800.0	-13700.0	13600.0	13600.0	-13600.0	13500.0	0.087	-0.086	0.00005
30:25.9	39.3	321.0	-13800.0	13800.0	13800.0	-13700.0	13600.0	13600.0	-13600.0	13600.0	0.176	-0.086	0.00005
30:39.2	38.8	442.0	-13800.0	13700.0	13700.0	-13700.0	13600.0	13700.0	-13700.0	13600.0	0.273	-0.086	0.00004
30:52.4	39.8	643.0	-13800.0	13700.0	13700.0	-13600.0	13700.0	13700.0	-13700.0	13600.0	0.365	-0.086	0.00001
31:05.6	38.7	933.0	-13700.0	13600.0	13600.0	-13600.0	13700.0	13800.0	-13800.0	13700.0	0.455	-0.086	0.00000
31:18.8	37.8	1310.0	-13600.0	13500.0	13500.0	-13500.0	13800.0	13900.0	-13900.0	13800.0	0.546	-0.086	-0.00003
31:32.0	37.3	1830.0	-13500.0	13400.0	13400.0	-13400.0	13900.0	14000.0	-14000.0	13900.0	0.634	-0.086	-0.00006
31:45.2	38.6	2400.0	-13400.0	13200.0	13300.0	-13200.0	14100.0	14200.0	-14200.0	14000.0	0.727	-0.086	-0.00010
31:58.4	38.9	3040.0	-13200.0	13100.0	13100.0	-13100.0	14200.0	14300.0	-14300.0	14200.0	0.817	-0.086	-0.00014
32:11.5	38.5	3740.0	-13100.0	12900.0	13000.0	-12900.0	14400.0	14500.0	-14500.0	14300.0	0.908	-0.086	-0.00019
32:24.7	37.0	4360.0	-12900.0	12800.0	12800.0	-12800.0	14500.0	14600.0	-14600.0	14500.0	0.981	-0.086	-0.00022

32:37.9	37.2	5200.0	-12800.0	12600.0	12700.0	-12600.0	14700.0	14800.0	-14800.0	14600.0	1.070	-0.086	-0.00027
32:51.1	38.5	6050.0	-12600.0	12400.0	12500.0	-12500.0	14800.0	15000.0	-15000.0	14800.0	1.150	-0.086	-0.00031
33:04.3	38.2	6400.0	-12500.0	12300.0	12400.0	-12400.0	14900.0	15100.0	-15000.0	14800.0	1.180	-0.086	-0.00032
33:17.5	37.5	6470.0	-12500.0	12300.0	12400.0	-12400.0	14900.0	15100.0	-15000.0	14800.0	1.190	-0.086	-0.00032
33:30.6	36.5	6520.0	-12500.0	12300.0	12400.0	-12400.0	14900.0	15100.0	-15100.0	14900.0	1.190	-0.086	-0.00032
33:43.8	37.8	6500.0	-12500.0	12300.0	12400.0	-12400.0	14900.0	15100.0	-15100.0	14900.0	1.190	-0.086	-0.00032
33:57.0	36.4	6490.0	-12500.0	12300.0	12400.0	-12400.0	14900.0	15100.0	-15100.0	14900.0	1.190	-0.086	-0.00031
34:10.1	37.9	6440.0	-12500.0	12300.0	12400.0	-12400.0	14900.0	15100.0	-15000.0	14900.0	1.190	-0.086	-0.00031
34:23.3	36.0	1150.0	-13600.0	13500.0	13500.0	-13600.0	13800.0	13800.0	-13800.0	13700.0	0.410	-0.086	0.00007
34:36.6	38.2	-31.8	-13800.0	13800.0	13800.0	-13800.0	13600.0	13600.0	-13700.0	13600.0	0.333	-0.086	0.00007
34:49.7	36.5	-28.3	-13800.0	13800.0	13800.0	-13800.0	13600.0	13600.0	-13700.0	13600.0	0.333	-0.086	0.00008
35:03.0	295.0	-29.4	-13900.0	13900.0	13800.0	-13800.0	13500.0	13600.0	-13600.0	13600.0	0.114	-0.086	0.00009
35:16.2	368.0	-29.7	-13900.0	13900.0	13800.0	-13900.0	13500.0	13600.0	-13600.0	13600.0	0.086	-0.078	0.00009
35:29.4	365.0	-28.9	-13900.0	13900.0	13800.0	-13900.0	13500.0	13600.0	-13600.0	13600.0	0.079	-0.077	0.00009
35:42.6	386.0	-30.2	-13900.0	13900.0	13800.0	-13900.0	13500.0	13600.0	-13600.0	13600.0	0.081	-0.044	0.00009
35:55.8	522.0	-29.8	-13900.0	13900.0	13800.0	-13900.0	13500.0	13600.0	-13600.0	13600.0	0.081	0.064	0.00009
36:09.0	334.0	-29.4	-13900.0	13900.0	13800.0	-13900.0	13500.0	13600.0	-13600.0	13600.0	0.081	0.172	0.00010
36:22.2	491.0	-29.0	-13900.0	13900.0	13900.0	-13900.0	13500.0	13500.0	-13500.0	13500.0	0.081	0.281	0.00011
36:35.4	747.0	-30.7	-14000.0	14000.0	13900.0	-14000.0	13400.0	13500.0	-13500.0	13500.0	0.081	0.399	0.00013
36:48.5	1230.0	-30.8	-14100.0	14100.0	14000.0	-14100.0	13300.0	13300.0	-13400.0	13400.0	0.081	0.506	0.00016
37:01.7	1780.0	-31.2	-14200.0	14200.0	14100.0	-14200.0	13200.0	13200.0	-13200.0	13200.0	0.081	0.613	0.00020
37:14.9	2370.0	-30.7	-14300.0	14400.0	14300.0	-14300.0	13100.0	13100.0	-13100.0	13100.0	0.081	0.721	0.00024
37:28.1	3180.0	-30.7	-14500.0	14600.0	14400.0	-14500.0	12900.0	12900.0	-12900.0	12900.0	0.081	0.830	0.00029
37:41.3	4060.0	-30.1	-14700.0	14800.0	14600.0	-14700.0	12800.0	12700.0	-12700.0	12800.0	0.081	0.938	0.00034
37:54.5	4980.0	-32.3	-14900.0	15000.0	14800.0	-14900.0	12600.0	12500.0	-12500.0	12600.0	0.081	1.050	0.00040

38:07.6	5900.0	-30.1	-15100.0	15200.0	15000.0	-15100.0	12400.0	12300.0	-12300.0	12400.0	0.081	1.150	0.00045
38:20.8	6790.0	-30.5	-15300.0	15400.0	15200.0	-15300.0	12200.0	12100.0	-12100.0	12200.0	0.081	1.260	0.00050
38:34.0	7610.0	-32.1	-15500.0	15600.0	15400.0	-15500.0	12000.0	11900.0	-11900.0	12000.0	0.081	1.370	0.00055
38:47.1	8340.0	-33.5	-15700.0	15800.0	15600.0	-15600.0	11800.0	11600.0	-11700.0	11800.0	0.081	1.490	0.00060
39:00.3	8880.0	-31.8	-15800.0	15900.0	15700.0	-15700.0	11700.0	11500.0	-11600.0	11600.0	0.081	1.560	0.00060
39:13.5	9110.0	-32.8	-15900.0	16000.0	15800.0	-15800.0	11600.0	11500.0	-11500.0	11600.0	0.081	1.590	0.00062
39:26.6	9050.0	-32.5	-15800.0	16000.0	15700.0	-15800.0	11600.0	11500.0	-11500.0	11600.0	0.081	1.590	0.00062
39:39.8	9030.0	-34.5	-15800.0	16000.0	15700.0	-15800.0	11600.0	11500.0	-11500.0	11600.0	0.081	1.590	0.00061
39:52.9	8990.0	-32.9	-15800.0	16000.0	15700.0	-15800.0	11600.0	11500.0	-11500.0	11600.0	0.081	1.590	0.00061
40:06.1	8930.0	-32.9	-15800.0	16000.0	15700.0	-15800.0	11600.0	11500.0	-11500.0	11600.0	0.081	1.590	0.00061
40:19.3	8850.0	-34.4	-15800.0	15900.0	15700.0	-15700.0	11600.0	11500.0	-11500.0	11600.0	0.081	1.580	0.00060
40:32.4	8790.0	-33.0	-15800.0	15600.0	15200.0	-14800.0	12600.0	12800.0	-13000.0	13000.0	0.081	0.653	0.00008
40:46.0	39.6	-33.3	-13900.0	13900.0	13900.0	-13800.0	13300.0	13400.0	-13400.0	13300.0	0.081	0.448	0.00008
40:59.2	37.6	1.8	-13900.0	13900.0	13800.0	-13800.0	13300.0	13400.0	-13400.0	13300.0	0.081	0.214	0.00007
41:12.4	35.5	176.0	-13900.0	13800.0	13800.0	-13800.0	13300.0	13500.0	-13500.0	13300.0	0.081	0.134	0.00007
41:25.6	37.3	186.0	-13900.0	13800.0	13800.0	-13800.0	13300.0	13500.0	-13500.0	13300.0	0.081	0.117	0.00007
41:38.7	35.2	182.0	-13900.0	13800.0	13800.0	-13800.0	13300.0	13500.0	-13500.0	13300.0	0.081	0.117	0.00007
41:51.9	34.6	174.0	-13900.0	13800.0	13800.0	-13800.0	13300.0	13500.0	-13500.0	13300.0	0.081	0.117	0.00006
42:05.1	36.1	225.0	-13900.0	13800.0	13800.0	-13800.0	13300.0	13500.0	-13500.0	13300.0	0.081	0.038	0.00006
42:18.2	35.4	215.0	-13900.0	13800.0	13800.0	-13800.0	13300.0	13500.0	-13500.0	13300.0	0.081	0.038	0.00006
42:31.4	36.4	228.0	-13900.0	13800.0	13800.0	-13800.0	13300.0	13500.0	-13500.0	13300.0	0.081	0.008	0.00006
42:44.5	35.5	354.0	-13800.0	13800.0	13800.0	-13700.0	13400.0	13500.0	-13500.0	13300.0	0.115	-0.111	0.00005
42:57.8	34.5	334.0	-13800.0	13800.0	13800.0	-13700.0	13400.0	13500.0	-13500.0	13300.0	0.113	-0.112	0.00005
43:10.9	35.9	326.0	-13800.0	13800.0	13800.0	-13700.0	13400.0	13500.0	-13500.0	13300.0	0.113	-0.112	0.00005
43:24.1	35.9	414.0	-13800.0	13700.0	13800.0	-13700.0	13400.0	13500.0	-13500.0	13400.0	0.215	-0.112	0.00004

43:37.3	36.1	759.0	-13700.0	13600.0	13700.0	-13600.0	13500.0	13600.0	-13600.0	13500.0	0.353	-0.112	0.00001
43:50.6	35.0	1300.0	-13600.0	13500.0	13500.0	-13500.0	13600.0	13800.0	-13800.0	13600.0	0.488	-0.112	-0.00003
44:03.8	36.7	2010.0	-13500.0	13300.0	13400.0	-13300.0	13800.0	14000.0	-13900.0	13700.0	0.622	-0.112	-0.00008
44:17.0	34.4	2930.0	-13300.0	13100.0	13200.0	-13100.0	14000.0	14200.0	-14200.0	13900.0	0.756	-0.112	-0.00014
44:30.2	35.9	3920.0	-13000.0	12900.0	12900.0	-12900.0	14200.0	14400.0	-14400.0	14200.0	0.892	-0.112	-0.00020
44:43.3	34.2	5060.0	-12800.0	12600.0	12700.0	-12700.0	14400.0	14700.0	-14600.0	14400.0	1.030	-0.112	-0.00027
44:56.6	35.1	6290.0	-12500.0	12300.0	12400.0	-12400.0	14700.0	14900.0	-14900.0	14700.0	1.160	-0.112	-0.00034
45:09.8	35.6	7450.0	-12300.0	12000.0	12200.0	-12200.0	14900.0	15200.0	-15100.0	14900.0	1.280	-0.112	-0.00038
45:22.9	34.9	8200.0	-12100.0	11900.0	12000.0	-12000.0	15100.0	15400.0	-15300.0	15100.0	1.400	-0.112	-0.00044
45:36.1	34.7	9230.0	-11800.0	11600.0	11800.0	-11700.0	15300.0	15600.0	-15500.0	15300.0	1.510	-0.112	-0.00049
45:49.3	35.1	9650.0	-11700.0	11500.0	11700.0	-11600.0	15400.0	15700.0	-15600.0	15400.0	1.570	-0.112	-0.00050
46:02.4	33.4	10000.0	-11600.0	11400.0	11600.0	-11500.0	15500.0	15800.0	-15700.0	15500.0	1.620	-0.112	-0.00051
46:15.6	34.7	9910.0	-11600.0	11400.0	11600.0	-11500.0	15400.0	15700.0	-15700.0	15400.0	1.620	-0.112	-0.00051
46:28.7	34.6	9840.0	-11600.0	11400.0	11600.0	-11500.0	15400.0	15700.0	-15700.0	15400.0	1.620	-0.112	-0.00051
46:41.9	33.8	9720.0	-11600.0	11400.0	11600.0	-11500.0	15400.0	15700.0	-15600.0	15400.0	1.620	-0.112	-0.00050
46:55.1	34.3	9610.0	-11600.0	11400.0	11600.0	-11500.0	15400.0	15700.0	-15600.0	15400.0	1.610	-0.112	-0.00050
47:08.2	33.1	9540.0	-11700.0	11500.0	11600.0	-11500.0	15400.0	15700.0	-15600.0	15400.0	1.610	-0.112	-0.00049
47:21.4	33.6	9460.0	-11700.0	11500.0	11600.0	-11500.0	15400.0	15700.0	-15600.0	15400.0	1.610	-0.112	-0.00048
47:34.6	35.2	9390.0	-11700.0	11500.0	11600.0	-11600.0	15400.0	15600.0	-15600.0	15400.0	1.600	-0.112	-0.00048
47:47.7	33.9	9330.0	-11700.0	11500.0	11700.0	-11600.0	15300.0	15300.0	-15000.0	14600.0	1.160	-0.112	0.00001
48:00.9	34.2	-38.7	-13600.0	13600.0	13600.0	-13500.0	13400.0	13500.0	-13500.0	13500.0	0.391	-0.112	0.00006
48:14.2	32.8	-36.4	-13600.0	13600.0	13600.0	-13500.0	13400.0	13500.0	-13500.0	13500.0	0.390	-0.112	0.00006
48:27.3	347.0	-37.9	-13700.0	13700.0	13600.0	-13600.0	13300.0	13400.0	-13400.0	13400.0	0.133	-0.112	0.00009
48:40.7	411.0	-35.3	-13700.0	13700.0	13700.0	-13600.0	13300.0	13400.0	-13400.0	13400.0	0.108	-0.108	0.00008
48:53.9	406.0	-36.3	-13700.0	13700.0	13700.0	-13600.0	13300.0	13400.0	-13400.0	13400.0	0.108	-0.082	0.00009

49:07.0	570.0	-35.6	-13700.0	13800.0	13700.0	-13700.0	13300.0	13400.0	-13400.0	13400.0	0.108	0.078	0.00010
49:20.3	285.0	-36.3	-13700.0	13700.0	13700.0	-13600.0	13300.0	13400.0	-13400.0	13400.0	0.108	0.245	0.00010
49:33.5	797.0	-35.7	-13800.0	13800.0	13800.0	-13700.0	13200.0	13300.0	-13300.0	13300.0	0.108	0.396	0.00014
49:46.7	1520.0	-34.9	-13900.0	14000.0	13900.0	-13900.0	13100.0	13100.0	-13100.0	13100.0	0.108	0.539	0.00018
49:59.9	2240.0	-34.4	-14100.0	14200.0	14100.0	-14000.0	12900.0	13000.0	-12900.0	12900.0	0.108	0.689	0.00023
50:13.1	3160.0	-35.4	-14300.0	14400.0	14300.0	-14300.0	12700.0	12800.0	-12700.0	12800.0	0.108	0.837	0.00029
50:26.3	4180.0	-35.1	-14500.0	14600.0	14500.0	-14500.0	12500.0	12500.0	-12500.0	12500.0	0.108	0.984	0.00035
50:39.4	5290.0	-35.4	-14800.0	14900.0	14800.0	-14700.0	12300.0	12200.0	-12200.0	12300.0	0.108	1.130	0.00042
50:52.6	6450.0	-36.1	-15000.0	15200.0	15000.0	-15000.0	12000.0	12000.0	-12000.0	12100.0	0.108	1.270	0.00049
51:05.8	7350.0	-34.3	-15200.0	15400.0	15200.0	-15200.0	11900.0	11800.0	-11800.0	11900.0	0.108	1.380	0.00055
51:18.9	8490.0	-35.1	-15500.0	15700.0	15500.0	-15500.0	11600.0	11500.0	-11500.0	11600.0	0.108	1.530	0.00060
51:32.1	9180.0	-36.4	-15700.0	15900.0	15600.0	-15600.0	11500.0	11400.0	-11400.0	11500.0	0.108	1.590	0.00062
51:45.3	9170.0	-33.4	-15700.0	15900.0	15600.0	-15600.0	11500.0	11400.0	-11400.0	11500.0	0.108	1.590	0.00062
51:58.4	9150.0	-34.9	-15700.0	15800.0	15600.0	-15600.0	11500.0	11400.0	-11400.0	11500.0	0.108	1.590	0.00061
52:11.6	9130.0	-34.6	-15700.0	15800.0	15600.0	-15600.0	11500.0	11400.0	-11400.0	11500.0	0.108	1.590	0.00062
52:24.8	9120.0	-35.0	-15700.0	15800.0	15600.0	-15600.0	11500.0	11400.0	-11400.0	11500.0	0.108	1.590	0.00061
52:37.9	9110.0	-33.8	-15700.0	15800.0	15600.0	-15600.0	11500.0	11400.0	-11400.0	11500.0	0.108	1.590	0.00034
52:51.1	46.0	-33.5	-13700.0	13700.0	13700.0	-13600.0	13200.0	13300.0	-13300.0	13200.0	0.108	0.424	0.00007
53:04.3	34.5	-31.5	-13700.0	13700.0	13700.0	-13600.0	13200.0	13300.0	-13300.0	13200.0	0.108	0.422	0.00007
53:17.5	34.1	160.0	-13700.0	13600.0	13700.0	-13500.0	13200.0	13400.0	-13400.0	13200.0	0.108	0.144	0.00006
53:30.7	33.1	215.0	-13700.0	13600.0	13600.0	-13500.0	13200.0	13400.0	-13400.0	13200.0	0.108	0.000	0.00005
53:44.0	31.7	330.0	-13600.0	13600.0	13600.0	-13500.0	13300.0	13400.0	-13400.0	13300.0	0.116	-0.114	0.00005
53:57.2	32.8	316.0	-13600.0	13600.0	13600.0	-13500.0	13300.0	13400.0	-13400.0	13300.0	0.115	-0.115	0.00005
54:10.3	31.8	372.0	-13600.0	13600.0	13600.0	-13500.0	13300.0	13400.0	-13400.0	13300.0	0.185	-0.115	0.00004
54:23.6	32.7	582.0	-13600.0	13500.0	13500.0	-13400.0	13300.0	13500.0	-13500.0	13300.0	0.315	-0.115	0.00003

54:36.8	31.0	845.0	-13500.0	13500.0	13500.0	-13300.0	13400.0	13600.0	-13600.0	13400.0	0.418	-0.115	0.00000
54:50.0	31.5	1440.0	-13400.0	13300.0	13300.0	-13200.0	13600.0	13800.0	-13700.0	13500.0	0.556	-0.115	-0.00004
55:03.2	31.1	2160.0	-13200.0	13100.0	13200.0	-13000.0	13700.0	13900.0	-13900.0	13700.0	0.695	-0.115	-0.00009
55:16.4	31.7	3010.0	-13000.0	12900.0	13000.0	-12900.0	13900.0	14100.0	-14100.0	13900.0	0.834	-0.115	-0.00014
55:29.6	30.9	3930.0	-12800.0	12700.0	12800.0	-12700.0	14100.0	14400.0	-14300.0	14100.0	0.969	-0.115	-0.00020
55:42.8	30.5	4970.0	-12600.0	12500.0	12600.0	-12400.0	14300.0	14600.0	-14500.0	14300.0	1.110	-0.115	-0.00026
55:56.0	30.8	6140.0	-12400.0	12200.0	12300.0	-12200.0	14500.0	14900.0	-14800.0	14600.0	1.240	-0.115	-0.00033
56:09.2	31.1	7400.0	-12100.0	11900.0	12100.0	-12000.0	14800.0	15100.0	-15100.0	14800.0	1.380	-0.115	-0.00041
56:22.4	31.0	8700.0	-11800.0	11600.0	11800.0	-11700.0	15100.0	15400.0	-15400.0	15100.0	1.520	-0.115	-0.00047
56:35.5	30.7	9490.0	-11700.0	11500.0	11600.0	-11500.0	15300.0	15600.0	-15500.0	15300.0	1.600	-0.115	-0.00049
56:48.7	30.6	9610.0	-11700.0	11400.0	11600.0	-11500.0	15300.0	15600.0	-15500.0	15300.0	1.600	-0.115	-0.00049
57:01.8	30.4	9530.0	-11700.0	11500.0	11600.0	-11600.0	15300.0	15600.0	-15500.0	15300.0	1.600	-0.115	-0.00049
57:15.0	31.5	9440.0	-11700.0	11500.0	11600.0	-11600.0	15200.0	15600.0	-15500.0	15200.0	1.600	-0.115	-0.00048
57:28.2	30.6	9370.0	-11700.0	11500.0	11700.0	-11600.0	15200.0	15600.0	-15500.0	15200.0	1.600	-0.115	-0.00048
57:41.3	31.8	9310.0	-11700.0	11500.0	11700.0	-11600.0	15200.0	15600.0	-15500.0	15200.0	1.600	-0.115	-0.00048
57:54.5	30.1	9260.0	-11700.0	11500.0	11700.0	-11600.0	15200.0	15500.0	-15500.0	15200.0	1.590	-0.115	-0.00048
58:07.7	31.1	9210.0	-11700.0	11400.0	11700.0	-11600.0	15200.0	15500.0	-15500.0	15200.0	1.590	-0.115	-0.00047
58:20.8	30.6	9150.0	-11700.0	11400.0	11800.0	-12100.0	14600.0	14600.0	-14400.0	14200.0	1.020	-0.115	0.00002
58:34.2	32.0	-37.0	-13600.0	13500.0	13600.0	-13500.0	13300.0	13400.0	-13400.0	13400.0	0.390	-0.115	0.00006
58:47.4	32.1	-35.1	-13600.0	13500.0	13600.0	-13500.0	13300.0	13400.0	-13400.0	13400.0	0.389	-0.115	0.00006
59:00.5	31.3	-36.6	-13600.0	13500.0	13600.0	-13500.0	13300.0	13400.0	-13400.0	13400.0	0.389	-0.115	0.00006
59:13.7	32.4	-35.4	-13600.0	13500.0	13600.0	-13500.0	13300.0	13400.0	-13400.0	13400.0	0.389	-0.115	0.00006
59:26.8	31.1	-36.0	-13600.0	13500.0	13600.0	-13500.0	13300.0	13400.0	-13400.0	13400.0	0.389	-0.115	0.00006
59:40.0	32.1	-36.5	-13600.0	13500.0	13600.0	-13500.0	13300.0	13400.0	-13400.0	13400.0	0.389	-0.115	0.00006
59:53.2	138.0	-35.4	-13600.0	13600.0	13600.0	-13600.0	13200.0	13400.0	-13400.0	13300.0	0.273	-0.115	0.00008

00:06.4	363.0	-36.0	-13700.0	13600.0	13600.0	-13600.0	13200.0	13400.0	-13300.0	13300.0	0.110	-0.107	0.00009
00:19.7	401.0	-35.6	-13700.0	13600.0	13600.0	-13600.0	13200.0	13400.0	-13300.0	13300.0	0.096	-0.091	0.00009
00:32.8	398.0	-35.9	-13700.0	13600.0	13600.0	-13600.0	13200.0	13400.0	-13300.0	13300.0	0.096	-0.091	0.00008
02:23.8	392.0	-35.7	-13700.0	13600.0	13600.0	-13600.0	13200.0	13400.0	-13300.0	13300.0	0.096	-0.091	0.00008
02:36.9	498.0	-36.2	-13700.0	13600.0	13700.0	-13600.0	13200.0	13300.0	-13300.0	13300.0	0.096	0.022	0.00009
02:50.2	275.0	-34.3	-13700.0	13600.0	13600.0	-13600.0	13200.0	13400.0	-13400.0	13300.0	0.096	0.197	0.00008
03:03.4	540.0	-34.3	-13700.0	13600.0	13700.0	-13700.0	13200.0	13300.0	-13300.0	13200.0	0.096	0.363	0.00011
03:16.6	1250.0	-35.5	-13900.0	13800.0	13800.0	-13800.0	13000.0	13100.0	-13100.0	13100.0	0.096	0.523	0.00015
03:29.8	1970.0	-36.2	-14000.0	14000.0	14000.0	-14000.0	12900.0	13000.0	-12900.0	12900.0	0.096	0.678	0.00021
03:43.0	2950.0	-37.3	-14200.0	14200.0	14200.0	-14200.0	12700.0	12700.0	-12700.0	12700.0	0.096	0.841	0.00028
03:56.2	4240.0	-36.8	-14500.0	14500.0	14500.0	-14500.0	12400.0	12400.0	-12400.0	12400.0	0.096	1.020	0.00036
04:09.4	5700.0	-36.2	-14900.0	14900.0	14800.0	-14800.0	12100.0	12100.0	-12100.0	12100.0	0.096	1.200	0.00045
04:22.5	7210.0	-37.3	-15200.0	15300.0	15200.0	-15200.0	11800.0	11700.0	-11700.0	11800.0	0.096	1.380	0.00055
04:35.7	8780.0	-37.9	-15600.0	15700.0	15500.0	-15500.0	11500.0	11400.0	-11400.0	11500.0	0.096	1.580	0.00064
04:48.9	10200.0	-37.2	-15900.0	16100.0	15900.0	-15900.0	11200.0	11000.0	-11000.0	11100.0	0.096	1.770	0.00072
05:02.1	11400.0	-38.8	-16300.0	16400.0	16200.0	-16200.0	10800.0	10700.0	-10700.0	10700.0	0.096	1.960	0.00079
05:15.3	12000.0	-38.1	-16600.0	16600.0	16400.0	-16400.0	10700.0	10500.0	-10500.0	10500.0	0.096	2.080	0.00082
05:28.5	13000.0	-37.9	-17100.0	17000.0	16800.0	-16800.0	10400.0	10200.0	-10300.0	10200.0	0.096	2.240	0.00085
05:41.6	13100.0	-38.2	-17100.0	17100.0	16800.0	-16800.0	10300.0	10100.0	-10200.0	10100.0	0.096	2.320	0.00086
05:54.8	13300.0	-39.3	-17200.0	17200.0	16800.0	-16900.0	10300.0	10100.0	-10200.0	10000.0	0.096	2.350	0.00086
06:08.0	13400.0	-40.0	-17400.0	17200.0	16900.0	-17000.0	10300.0	10100.0	-10100.0	9970.0	0.096	2.380	0.00088
06:21.2	13400.0	-37.8	-17400.0	17300.0	16900.0	-17000.0	10200.0	10000.0	-10100.0	9950.0	0.096	2.400	0.00087
06:34.3	13400.0	-39.3	-17300.0	17200.0	16900.0	-17000.0	10200.0	10100.0	-10100.0	9950.0	0.096	2.400	0.00087
06:47.5	13300.0	-38.4	-17300.0	17200.0	16900.0	-16900.0	10200.0	10100.0	-10100.0	9950.0	0.096	2.400	0.00087
07:00.7	13300.0	-37.0	-17300.0	17200.0	16900.0	-16900.0	10200.0	10100.0	-10100.0	9960.0	0.096	2.400	0.00087

07:13.8	13200.0	-36.8	-17200.0	17100.0	16800.0	-16900.0	10300.0	10100.0	-10200.0	9980.0	0.096	2.390	0.00086
07:27.0	13100.0	-38.3	-17200.0	17100.0	16800.0	-16900.0	10300.0	10100.0	-10200.0	10000.0	0.096	2.390	0.00085
07:40.2	13000.0	-35.3	-17200.0	17100.0	16800.0	-16800.0	10300.0	10100.0	-10200.0	10000.0	0.096	2.380	0.00074
07:53.3	1200.0	-38.3	-14000.0	13800.0	13800.0	-13800.0	12800.0	13000.0	-13000.0	12600.0	0.096	0.875	0.00008
08:06.6	30.6	-36.7	-13900.0	13800.0	13800.0	-13800.0	12800.0	13000.0	-13000.0	12600.0	0.096	0.872	0.00008
08:19.7	27.2	-37.4	-13900.0	13800.0	13800.0	-13800.0	12800.0	13000.0	-13000.0	12600.0	0.096	0.871	0.00008
08:32.9	27.4	79.6	-13900.0	13700.0	13800.0	-13800.0	12800.0	13000.0	-13000.0	12600.0	0.096	0.759	0.00007
08:46.1	24.0	73.9	-13900.0	13700.0	13800.0	-13800.0	12800.0	13000.0	-13000.0	12600.0	0.096	0.759	0.00007
08:59.2	25.6	215.0	-13800.0	13700.0	13800.0	-13700.0	12900.0	13000.0	-13100.0	12600.0	0.096	0.597	0.00004
09:12.7	24.2	508.0	-13700.0	13600.0	13700.0	-13700.0	12900.0	13100.0	-13100.0	12700.0	0.096	0.429	0.00004
09:25.9	24.1	555.0	-13700.0	13600.0	13700.0	-13600.0	12900.0	13100.0	-13200.0	12700.0	0.096	0.296	0.00004
09:39.1	23.6	218.0	-13800.0	13700.0	13700.0	-13700.0	12900.0	13100.0	-13100.0	12600.0	0.096	0.083	0.00004
09:52.3	21.4	846.0	-13700.0	13500.0	13600.0	-13600.0	13000.0	13200.0	-13200.0	12700.0	0.096	-0.088	0.00003
10:05.5	21.2	819.0	-13700.0	13500.0	13600.0	-13600.0	13000.0	13200.0	-13200.0	12700.0	0.094	-0.091	0.00002
10:18.7	22.3	1320.0	-13600.0	13400.0	13500.0	-13500.0	13100.0	13300.0	-13300.0	12900.0	0.276	-0.091	-0.00004
10:32.0	21.2	2440.0	-13300.0	13100.0	13200.0	-13200.0	13400.0	13600.0	-13600.0	13200.0	0.507	-0.091	-0.00012
10:45.3	20.1	3880.0	-13000.0	12700.0	12900.0	-12800.0	13700.0	14000.0	-14000.0	13500.0	0.748	-0.091	-0.00021
10:58.5	21.8	5520.0	-12600.0	12400.0	12500.0	-12500.0	14000.0	14300.0	-14300.0	13800.0	0.992	-0.091	-0.00030
11:11.7	20.6	7280.0	-12200.0	12000.0	12200.0	-12100.0	14400.0	14700.0	-14700.0	14200.0	1.230	-0.091	-0.00041
11:24.9	21.3	9140.0	-11800.0	11500.0	11800.0	-11700.0	14800.0	15200.0	-15200.0	14600.0	1.480	-0.091	-0.00052
11:38.1	20.7	10800.0	-11400.0	11100.0	11400.0	-11400.0	15200.0	15500.0	-15500.0	15000.0	1.650	-0.091	-0.00054
11:51.2	22.3	10600.0	-11400.0	11100.0	11400.0	-11400.0	15100.0	15500.0	-15400.0	14900.0	1.650	-0.091	-0.00054
12:04.4	20.0	10600.0	-11400.0	11100.0	11400.0	-11400.0	15100.0	15500.0	-15500.0	14900.0	1.650	-0.091	-0.00057
12:17.6	19.4	10600.0	-11400.0	11100.0	11400.0	-11400.0	15200.0	15500.0	-15500.0	15000.0	1.750	-0.091	-0.00054
12:30.8	20.3	10600.0	-11400.0	11100.0	11400.0	-11400.0	15100.0	15500.0	-15500.0	15000.0	1.750	-0.091	-0.00054

12:44.0	19.6	10600.0	-11400.0	11100.0	11400.0	-11400.0	15100.0	15500.0	-15500.0	15000.0	1.750	-0.091	-0.00054
12:57.1	20.7	10600.0	-11400.0	11100.0	11400.0	-11400.0	15100.0	15500.0	-15500.0	15000.0	1.750	-0.091	-0.00054
13:10.3	21.0	10500.0	-11400.0	11100.0	11400.0	-11400.0	15100.0	15500.0	-15500.0	15000.0	1.770	-0.091	-0.00060
13:23.5	20.2	12100.0	-11000.0	10700.0	11100.0	-11000.0	15600.0	16000.0	-15900.0	15400.0	1.980	-0.091	-0.00066
13:36.6	19.3	12500.0	-10900.0	10600.0	10900.0	-10900.0	15700.0	16000.0	-15900.0	15500.0	2.040	-0.091	-0.00065
13:49.8	20.5	13200.0	-10700.0	10400.0	10800.0	-10700.0	16000.0	16300.0	-16200.0	15800.0	2.170	-0.091	-0.00072
14:03.1	20.0	13900.0	-10500.0	10200.0	10500.0	-10400.0	16800.0	16800.0	-16600.0	16300.0	2.340	-0.091	-0.00074
14:16.2	20.3	14500.0	-10400.0	10100.0	10400.0	-10200.0	17100.0	17000.0	-16800.0	16400.0	2.400	-0.091	-0.00076
14:29.5	19.3	14200.0	-10400.0	10100.0	10400.0	-10200.0	17000.0	16900.0	-16700.0	16400.0	2.400	-0.091	-0.00076
14:42.6	19.5	14100.0	-10400.0	10100.0	10400.0	-10300.0	16900.0	16900.0	-16600.0	16300.0	2.400	-0.091	-0.00075
14:55.8	20.7	13900.0	-10400.0	10100.0	10400.0	-10300.0	16800.0	16800.0	-16600.0	16300.0	2.400	-0.091	-0.00075
15:08.9	19.0	13800.0	-10400.0	10100.0	10400.0	-10300.0	16600.0	16700.0	-16500.0	16200.0	2.390	-0.091	-0.00074
15:22.1	19.0	13700.0	-10400.0	10200.0	10500.0	-10400.0	16500.0	16700.0	-16500.0	16200.0	2.390	-0.091	-0.00073
15:35.3	18.1	13600.0	-10500.0	10200.0	10500.0	-10400.0	16400.0	16600.0	-16400.0	16100.0	2.380	-0.091	-0.00073
15:48.4	20.0	13500.0	-10500.0	10200.0	10500.0	-10400.0	16400.0	16600.0	-16400.0	16100.0	2.370	-0.091	-0.00072
16:01.6	19.7	13400.0	-10500.0	10200.0	10500.0	-10400.0	16300.0	16500.0	-16300.0	16100.0	2.370	-0.091	-0.00072
16:14.8	19.2	13300.0	-10500.0	10200.0	10500.0	-10400.0	16300.0	16500.0	-16300.0	16000.0	2.360	-0.091	-0.00071
16:27.9	20.0	13300.0	-10500.0	10300.0	10500.0	-10500.0	16200.0	16500.0	-16300.0	16000.0	2.360	-0.091	-0.00071
16:41.1	19.2	13200.0	-10500.0	10300.0	10600.0	-10500.0	16200.0	16400.0	-16300.0	16000.0	2.360	-0.091	-0.00070
16:54.2	19.8	13100.0	-10500.0	10300.0	10600.0	-10500.0	16100.0	16400.0	-16200.0	16000.0	2.350	-0.091	-0.00070
17:07.4	20.1	13000.0	-10600.0	10300.0	10600.0	-10500.0	16100.0	16400.0	-16200.0	15900.0	2.350	-0.091	-0.00070
17:20.6	20.2	12900.0	-10600.0	10300.0	10600.0	-10500.0	16100.0	16400.0	-16200.0	15900.0	2.340	-0.091	-0.00069
17:33.7	19.3	12900.0	-10600.0	10300.0	10600.0	-10600.0	16000.0	16300.0	-16200.0	15900.0	2.340	-0.091	-0.00069
17:46.9	19.1	12800.0	-10600.0	10300.0	10600.0	-10600.0	16000.0	16300.0	-16100.0	15900.0	2.330	-0.091	-0.00069
18:00.1	19.3	12700.0	-10600.0	10400.0	10600.0	-10600.0	16000.0	16300.0	-16100.0	15900.0	2.330	-0.091	-0.00068

18:13.2	20.2	12700.0	-10600.0	10400.0	10700.0	-10600.0	16000.0	16300.0	-16100.0	15800.0	2.320	-0.091	-0.00068
18:26.4	19.7	12600.0	-10600.0	10400.0	10700.0	-10600.0	15900.0	16200.0	-16100.0	15800.0	2.320	-0.091	-0.00067
18:39.5	18.8	12500.0	-10700.0	10400.0	10700.0	-10600.0	15900.0	16200.0	-16100.0	15800.0	2.320	-0.091	-0.00067
18:52.7	20.9	10300.0	-11400.0	11500.0	11800.0	-12000.0	13900.0	14200.0	-14000.0	13600.0	1.360	-0.091	-0.00001
19:05.9	19.2	905.0	-13000.0	13000.0	13100.0	-13000.0	13000.0	13400.0	-13300.0	13000.0	1.020	-0.091	0.00002
19:19.1	18.7	-40.8	-13300.0	13200.0	13300.0	-13200.0	12800.0	13100.0	-13100.0	12800.0	0.698	-0.091	0.00005
19:32.4	19.5	-41.1	-13300.0	13200.0	13300.0	-13200.0	12800.0	13100.0	-13100.0	12800.0	0.697	-0.091	0.00005
19:45.5	19.9	-37.7	-13300.0	13200.0	13300.0	-13200.0	12800.0	13100.0	-13100.0	12800.0	0.697	-0.091	0.00005
19:58.7	19.7	-40.2	-13300.0	13200.0	13300.0	-13200.0	12800.0	13100.0	-13100.0	12800.0	0.697	-0.091	0.00005
20:11.9	18.7	-39.9	-13300.0	13200.0	13300.0	-13200.0	12800.0	13100.0	-13100.0	12800.0	0.697	-0.091	0.00005
20:25.0	18.6	-39.2	-13300.0	13200.0	13300.0	-13200.0	12800.0	13100.0	-13100.0	12800.0	0.697	-0.091	0.00005
20:38.2	19.4	-39.7	-13300.0	13200.0	13300.0	-13200.0	12800.0	13100.0	-13100.0	12800.0	0.696	-0.091	0.00005
20:51.3	17.7	-40.6	-13300.0	13200.0	13300.0	-13200.0	12800.0	13100.0	-13100.0	12800.0	0.696	-0.091	0.00006
21:04.5	18.2	-41.1	-13300.0	13200.0	13300.0	-13200.0	12800.0	13100.0	-13100.0	12800.0	0.696	-0.091	0.00005
21:17.7	19.0	-38.6	-13300.0	13200.0	13300.0	-13200.0	12800.0	13100.0	-13100.0	12800.0	0.696	-0.091	0.00005
21:30.8	18.6	-40.0	-13300.0	13200.0	13300.0	-13200.0	12800.0	13100.0	-13100.0	12800.0	0.696	-0.091	0.00005
21:44.0	18.2	-38.7	-13300.0	13200.0	13300.0	-13200.0	12800.0	13100.0	-13100.0	12800.0	0.696	-0.091	0.00005
21:57.2	20.1	-38.2	-13300.0	13200.0	13300.0	-13200.0	12800.0	13100.0	-13100.0	12800.0	0.696	-0.091	0.00005
22:10.3	20.1	-38.2	-13300.0	13200.0	13300.0	-13200.0	12800.0	13100.0	-13100.0	12800.0	0.696	-0.091	0.00005
22:23.5	17.5	-38.2	-13300.0	13200.0	13300.0	-13200.0	12800.0	13100.0	-13100.0	12800.0	0.696	-0.091	0.00005
22:36.7	18.6	-39.4	-13300.0	13200.0	13300.0	-13200.0	12800.0	13100.0	-13100.0	12800.0	0.695	-0.091	0.00006
22:49.8	18.3	-38.5	-13300.0	13200.0	13300.0	-13200.0	12800.0	13100.0	-13100.0	12800.0	0.695	-0.091	0.00005
23:03.0	18.0	-38.9	-13300.0	13200.0	13300.0	-13200.0	12800.0	13100.0	-13100.0	12800.0	0.695	-0.091	0.00005
23:16.1	18.6	-40.7	-13300.0	13200.0	13300.0	-13200.0	12800.0	13100.0	-13100.0	12800.0	0.695	-0.091	0.00006
23:29.3	18.8	-39.4	-13300.0	13200.0	13300.0	-13200.0	12800.0	13100.0	-13100.0	12800.0	0.695	-0.091	0.00006

23:42.5	18.2	-38.3	-13300.0	13200.0	13300.0	-13200.0	12800.0	13100.0	-13100.0	12800.0	0.695	-0.091	0.00005
23:55.6	16.1	-36.6	-13300.0	13200.0	13300.0	-13200.0	12800.0	13100.0	-13100.0	12800.0	0.695	-0.091	0.00006
24:08.8	18.5	-37.2	-13300.0	13200.0	13300.0	-13200.0	12800.0	13100.0	-13100.0	12800.0	0.695	-0.091	0.00005
24:22.0	17.6	-37.6	-13300.0	13200.0	13300.0	-13200.0	12800.0	13100.0	-13100.0	12800.0	0.695	-0.091	0.00006
24:35.1	18.3	-38.3	-13300.0	13200.0	13300.0	-13200.0	12800.0	13100.0	-13100.0	12800.0	0.695	-0.091	0.00006
24:48.3	17.2	-39.5	-13300.0	13200.0	13300.0	-13200.0	12800.0	13100.0	-13100.0	12800.0	0.695	-0.091	0.00006
25:01.4	19.6	-40.8	-13300.0	13200.0	13300.0	-13200.0	12800.0	13100.0	-13100.0	12800.0	0.691	-0.091	0.00006
25:14.6	17.6	-40.5	-13300.0	13200.0	13300.0	-13200.0	12800.0	13100.0	-13000.0	12800.0	0.679	-0.091	0.00006
25:27.8	16.5	-38.6	-13300.0	13200.0	13300.0	-13200.0	12800.0	13100.0	-13000.0	12800.0	0.678	-0.091	0.00006
25:40.9	15.8	-39.6	-13300.0	13200.0	13300.0	-13200.0	12800.0	13100.0	-13000.0	12800.0	0.678	-0.091	0.00006
25:54.1	18.6	-39.5	-13300.0	13200.0	13300.0	-13200.0	12800.0	13100.0	-13000.0	12800.0	0.678	-0.091	0.00006
26:07.3	19.2	-38.8	-13300.0	13200.0	13300.0	-13200.0	12800.0	13100.0	-13000.0	12800.0	0.678	-0.091	0.00006
26:20.4	17.7	-40.8	-13300.0	13200.0	13300.0	-13200.0	12800.0	13100.0	-13000.0	12800.0	0.678	-0.091	0.00006
26:33.6	17.9	-39.3	-13300.0	13200.0	13300.0	-13200.0	12800.0	13100.0	-13000.0	12800.0	0.678	-0.091	0.00006
26:46.7	20.1	-40.7	-13300.0	13200.0	13300.0	-13200.0	12800.0	13100.0	-13000.0	12800.0	0.678	-0.091	0.00006
26:59.9	18.9	-38.4	-13300.0	13200.0	13300.0	-13200.0	12800.0	13100.0	-13000.0	12800.0	0.678	-0.091	0.00006
27:13.1	18.0	-40.3	-13300.0	13200.0	13300.0	-13200.0	12800.0	13100.0	-13000.0	12800.0	0.678	-0.091	0.00006
27:26.2	18.1	-38.6	-13300.0	13200.0	13300.0	-13200.0	12800.0	13100.0	-13000.0	12800.0	0.678	-0.091	0.00006
56:47.2	1.1	32.6	-13300.0	13200.0	13300.0	-13100.0	12800.0	13100.0	-13100.0	12800.0	0.468	-0.096	-0.00002
57:00.5	1.4	31.2	-13300.0	13200.0	13300.0	-13100.0	12800.0	13100.0	-13100.0	12800.0	0.468	-0.096	-0.00001
57:13.7	221.0	32.7	-13300.0	13200.0	13300.0	-13100.0	12800.0	13100.0	-13000.0	12700.0	0.455	-0.096	0.00000
57:26.9	614.0	31.4	-13400.0	13300.0	13500.0	-13300.0	12600.0	12900.0	-12900.0	12600.0	0.373	-0.096	0.00004
57:40.0	1420.0	32.3	-13500.0	13500.0	13600.0	-13400.0	12500.0	12700.0	-12700.0	12400.0	0.231	-0.096	0.00013
57:53.3	2430.0	31.9	-13700.0	13700.0	13800.0	-13600.0	12300.0	12600.0	-12600.0	12300.0	0.141	-0.096	0.00011
58:06.4	2180.0	32.1	-13700.0	13600.0	13800.0	-13500.0	12400.0	12600.0	-12600.0	12300.0	0.140	-0.096	0.00011

58:19.6	2130.0	32.2	-13700.0	13600.0	13700.0	-13500.0	12400.0	12600.0	-12600.0	12300.0	0.140	-0.096	0.00016
58:32.7	3750.0	33.8	-14000.0	14000.0	14100.0	-13900.0	12100.0	12300.0	-12300.0	12000.0	0.001	0.008	0.00019
58:45.9	3540.0	32.0	-14000.0	13900.0	14000.0	-13800.0	12100.0	12300.0	-12300.0	12000.0	0.000	0.009	0.00019
58:59.1	3480.0	32.2	-14000.0	13900.0	14000.0	-13800.0	12100.0	12300.0	-12300.0	12000.0	0.000	0.010	0.00018
59:12.3	3440.0	30.7	-14000.0	13900.0	14000.0	-13800.0	12100.0	12300.0	-12300.0	12000.0	0.000	0.010	0.00018
59:25.4	3420.0	32.4	-14000.0	13900.0	14000.0	-13800.0	12100.0	12300.0	-12300.0	12000.0	0.000	0.010	0.00018
59:38.6	3410.0	33.2	-14000.0	13900.0	14000.0	-13800.0	12100.0	12300.0	-12300.0	12000.0	-0.008	0.010	0.00018
59:51.8	3390.0	30.9	-14000.0	13900.0	14000.0	-13800.0	12100.0	12400.0	-12300.0	12000.0	-0.008	0.019	0.00027
00:04.9	6030.0	30.2	-14600.0	14600.0	14600.0	-14400.0	11500.0	11600.0	-11600.0	11300.0	-0.008	0.216	0.00045
00:18.2	9190.0	30.9	-15300.0	15300.0	15300.0	-15200.0	10900.0	10900.0	-10900.0	10600.0	-0.008	0.418	0.00064
00:31.3	12400.0	32.7	-16300.0	16300.0	16300.0	-16100.0	10300.0	10200.0	-10200.0	9820.0	-0.008	0.621	0.00084
00:44.5	14400.0	32.6	-18800.0	18100.0	17800.0	-17800.0	9760.0	9620.0	-9630.0	9060.0	-0.008	0.772	0.00098
00:57.7	17000.0	33.0	-22000.0	20500.0	20000.0	-20600.0	8930.0	8740.0	-8760.0	7720.0	-0.008	0.971	0.00115
01:10.9	19100.0	31.3	-24500.0	22500.0	22000.0	-23500.0	7910.0	7760.0	-7850.0	6380.0	-0.008	1.160	0.00131
01:24.1	21100.0	32.2	-26800.0	24400.0	23700.0	-26000.0	6840.0	6830.0	-6930.0	4870.0	-0.008	1.340	0.00139
01:37.2	21100.0	30.0	-27000.0	24600.0	23900.0	-26300.0	6620.0	6640.0	-6700.0	4510.0	-0.008	1.400	0.00150
01:50.4	22900.0	30.7	-28500.0	26100.0	25200.0	-27800.0	5630.0	5880.0	-5900.0	3310.0	-0.008	1.530	0.00153
02:03.5	22400.0	32.2	-28100.0	25800.0	24900.0	-27500.0	5620.0	5890.0	-5890.0	3280.0	-0.008	1.530	0.00152
02:16.7	22300.0	30.9	-28000.0	25700.0	24800.0	-27400.0	5620.0	5900.0	-5900.0	3280.0	-0.008	1.530	0.00152
02:29.9	22300.0	31.1	-27900.0	25700.0	24800.0	-27300.0	5620.0	5900.0	-5900.0	3280.0	-0.008	1.530	0.00152
02:43.0	22200.0	31.0	-28000.0	25800.0	25000.0	-27800.0	5490.0	5750.0	-5710.0	3020.0	-0.008	1.580	0.00162
02:56.2	23400.0	29.8	-29000.0	26800.0	25900.0	-28700.0	4900.0	5350.0	-5280.0	2440.0	-0.008	1.640	0.00166
03:09.4	24300.0	31.5	-29800.0	27700.0	26600.0	-29800.0	4020.0	4680.0	-4510.0	1330.0	-0.008	1.760	0.00168
03:22.5	24100.0	30.8	-29600.0	27500.0	26500.0	-29600.0	3870.0	4590.0	-4380.0	1140.0	-0.008	1.780	0.00167
03:35.7	24700.0	31.7	-30400.0	28300.0	27300.0	-30700.0	3430.0	4230.0	-3940.0	562.0	-0.008	1.870	0.00177

03:48.9	25900.0	31.8	-31400.0	29500.0	28400.0	-31900.0	2130.0	2940.0	-2310.0	-81.9	-0.008	2.090	0.00182
04:02.1	26600.0	31.0	-32000.0	30300.0	29100.0	-32700.0	1620.0	1870.0	-1210.0	-78.9	-0.008	2.260	0.00184
04:15.2	26400.0	31.0	-31600.0	30000.0	28700.0	-32200.0	1520.0	1720.0	-1130.0	-81.9	-0.008	2.270	0.00183
04:28.4	26700.0	31.0	-32000.0	30300.0	29000.0	-32500.0	1440.0	1610.0	-1080.0	-79.1	-0.008	2.300	0.00186
04:41.6	27200.0	30.6	-32500.0	30900.0	29700.0	-33200.0	1140.0	1330.0	-966.0	-59.3	-0.008	2.420	0.00186
04:54.8	26800.0	31.0	-31900.0	30500.0	29200.0	-32600.0	1070.0	1340.0	-950.0	-57.8	-0.008	2.420	0.00185
05:07.9	26700.0	31.2	-31700.0	30300.0	29000.0	-32400.0	1060.0	1340.0	-951.0	-58.6	-0.008	2.420	0.00184
05:21.1	26600.0	30.8	-31600.0	30200.0	28900.0	-32300.0	1060.0	1340.0	-952.0	-59.2	-0.008	2.420	0.00184
05:34.3	26500.0	31.5	-31500.0	30200.0	28900.0	-32200.0	1060.0	1350.0	-952.0	-59.6	-0.008	2.420	0.00184
05:47.4	26500.0	30.8	-31500.0	30100.0	28800.0	-32200.0	1060.0	1350.0	-953.0	-59.4	-0.008	2.420	0.00184
06:00.6	26400.0	31.3	-31400.0	30100.0	28800.0	-32100.0	1060.0	1350.0	-953.0	-60.0	-0.008	2.420	0.00183
06:13.7	26400.0	29.4	-31400.0	30100.0	28800.0	-32100.0	1060.0	1350.0	-954.0	-59.9	-0.008	2.420	0.00183
06:26.9	26400.0	30.5	-31400.0	30000.0	28800.0	-32000.0	1060.0	1350.0	-954.0	-60.5	-0.008	2.420	0.00183
06:40.1	26400.0	30.5	-31300.0	30000.0	28700.0	-32000.0	1060.0	1360.0	-953.0	-60.6	-0.008	2.420	0.00183
06:53.2	26300.0	30.0	-31300.0	30000.0	28700.0	-32000.0	1060.0	1360.0	-954.0	-61.7	-0.008	2.420	0.00183
07:06.4	26300.0	31.0	-31300.0	30000.0	28700.0	-32000.0	1060.0	1360.0	-955.0	-60.9	-0.008	2.420	0.00183
07:19.6	26300.0	30.3	-31300.0	30000.0	28700.0	-32000.0	1060.0	1360.0	-955.0	-60.1	-0.008	2.420	0.00183
07:32.7	26300.0	31.0	-31200.0	30000.0	28700.0	-31900.0	1060.0	1360.0	-955.0	-61.8	-0.008	2.420	0.00183
07:45.9	26300.0	29.0	-31200.0	29900.0	28600.0	-31900.0	1060.0	1360.0	-955.0	-61.6	-0.008	2.420	0.00182
07:59.0	26300.0	29.3	-31200.0	29900.0	28600.0	-31900.0	1060.0	1360.0	-955.0	-61.6	-0.008	2.420	0.00182
08:12.2	26200.0	28.5	-31200.0	29900.0	28600.0	-31900.0	1060.0	1360.0	-956.0	-61.7	-0.008	2.420	0.00182
08:25.4	26200.0	28.6	-31200.0	29900.0	28600.0	-31900.0	1060.0	1360.0	-955.0	-62.2	-0.008	2.420	0.00183
08:38.5	26200.0	30.1	-31200.0	29900.0	28600.0	-31900.0	1060.0	1360.0	-956.0	-62.3	-0.008	2.420	0.00183
08:51.7	26200.0	29.9	-31100.0	29900.0	28600.0	-31800.0	1060.0	1360.0	-953.0	-62.4	-0.008	2.420	0.00183
09:04.9	26200.0	29.3	-31100.0	29900.0	28600.0	-31800.0	1060.0	1360.0	-954.0	-62.5	-0.008	2.420	0.00183

09:18.0	26200.0	28.7	-31100.0	29900.0	28600.0	-31800.0	1060.0	1360.0	-954.0	-63.2	-0.008	2.420	0.00182
09:31.2	26200.0	29.9	-31100.0	29900.0	28600.0	-31800.0	1060.0	1360.0	-955.0	-63.2	-0.008	2.420	0.00183
09:44.3	26200.0	28.2	-31100.0	29800.0	28500.0	-31800.0	1060.0	1360.0	-955.0	-63.6	-0.008	2.420	0.00182
09:57.5	26200.0	29.9	-31100.0	29800.0	28500.0	-31800.0	1060.0	1360.0	-955.0	-63.2	-0.008	2.420	0.00182
10:10.7	26200.0	30.5	-31100.0	29800.0	28500.0	-31800.0	1060.0	1370.0	-955.0	-63.5	-0.008	2.420	0.00182
10:23.8	26200.0	30.5	-31100.0	29800.0	28500.0	-31800.0	1060.0	1370.0	-955.0	-64.3	-0.008	2.420	0.00182
10:37.0	26100.0	30.1	-31100.0	29800.0	28500.0	-31800.0	1060.0	1370.0	-956.0	-63.6	-0.008	2.420	0.00183
10:50.1	26100.0	30.8	-31100.0	29800.0	28500.0	-31800.0	1060.0	1370.0	-955.0	-64.6	-0.008	2.420	0.00182
11:03.3	26100.0	31.0	-31000.0	29800.0	28500.0	-31700.0	1060.0	1370.0	-955.0	-64.4	-0.008	2.420	0.00182
11:16.5	26100.0	31.5	-31000.0	29800.0	28500.0	-31700.0	1060.0	1370.0	-955.0	-64.7	-0.008	2.420	0.00182
11:29.6	26100.0	31.4	-31000.0	29800.0	28500.0	-31700.0	1060.0	1370.0	-955.0	-64.3	-0.008	2.420	0.00182
11:42.8	26100.0	31.0	-31000.0	29800.0	28500.0	-31700.0	1060.0	1370.0	-953.0	-66.8	-0.008	2.420	0.00182
11:56.0	26100.0	31.0	-31000.0	29800.0	28500.0	-31700.0	1060.0	1380.0	-956.0	-67.6	-0.008	2.420	0.00182
12:09.1	26100.0	28.7	-31000.0	29700.0	28400.0	-31700.0	1060.0	1400.0	-957.0	-66.8	-0.008	2.420	0.00182
12:22.3	26100.0	30.6	-31000.0	29700.0	28400.0	-31700.0	1060.0	1400.0	-956.0	-67.5	-0.008	2.420	0.00182
12:35.4	26000.0	30.9	-31000.0	29700.0	28400.0	-31700.0	1060.0	1390.0	-957.0	-67.8	-0.008	2.420	0.00182
12:48.6	26000.0	30.2	-30900.0	29700.0	28400.0	-31700.0	1060.0	1400.0	-958.0	-67.1	-0.008	2.420	0.00181
13:01.8	25700.0	29.1	-30600.0	29500.0	28200.0	-31400.0	1080.0	1460.0	-990.0	-70.0	-0.008	2.400	0.00179
13:14.9	25600.0	31.9	-30500.0	29400.0	28100.0	-31300.0	1090.0	1490.0	-1000.0	-71.2	-0.008	2.390	0.00178
13:28.1	25500.0	30.5	-30400.0	29300.0	28000.0	-31100.0	1100.0	1540.0	-1050.0	-74.6	-0.008	2.380	0.00118
13:41.2	14500.0	31.0	-16300.0	18300.0	17600.0	-16600.0	2820.0	4640.0	-3790.0	125.0	-0.008	1.590	0.00027
13:54.5	235.0	29.8	-70.1	2180.0	1970.0	-120.0	7860.0	9160.0	-7690.0	4060.0	-0.008	0.924	0.00027
14:07.6	231.0	31.0	-66.4	2170.0	1970.0	-119.0	7860.0	9160.0	-7700.0	4070.0	-0.008	0.922	0.00027
14:20.8	230.0	31.5	-63.7	2160.0	1970.0	-119.0	7870.0	9170.0	-7700.0	4080.0	-0.008	0.922	0.00023
14:33.9	229.0	804.0	-60.9	376.0	74.5	-116.0	8560.0	9720.0	-8250.0	4930.0	-0.008	0.729	0.00019
14:47.1	228.0	1580.0	-59.1	43.2	77.0	-115.0	9200.0	10300.0	-8950.0	6040.0	-0.008	0.486	0.00014
15:00.3	227.0	2600.0	-58.3	44.4	76.9	-115.0	9550.0	10700.0	-9370.0	6610.0	-0.008	0.254	0.00006

15:13.6	228.0	4000.0	-56.7	38.4	75.4	-114.0	9930.0	11200.0	-9780.0	7090.0	0.011	-0.003	0.00000
15:26.8	228.0	4130.0	-56.1	38.1	75.2	-113.0	9930.0	11100.0	-9740.0	7050.0	0.012	-0.012	0.00001
15:40.0	227.0	4890.0	-56.0	36.3	74.4	-114.0	10200.0	11400.0	-10000.0	7400.0	0.139	-0.012	-0.00012
15:53.1	227.0	7510.0	-55.4	34.8	73.2	-113.0	10900.0	12200.0	-10800.0	8350.0	0.378	-0.012	-0.00029
16:06.3	226.0	10200.0	-55.3	33.7	72.6	-113.0	12300.0	13500.0	-12300.0	10400.0	0.632	-0.012	-0.00044
16:19.5	226.0	12900.0	-54.8	33.6	72.8	-113.0	15100.0	15700.0	-14300.0	13100.0	0.896	-0.012	-0.00058
16:32.7	226.0	15800.0	-52.9	32.8	71.7	-113.0	18500.0	18200.0	-16800.0	16300.0	1.160	-0.012	-0.00073
16:45.9	226.0	15800.0	-53.2	31.5	71.7	-113.0	18400.0	18000.0	-16600.0	16300.0	1.350	-0.012	-0.00078
16:59.1	226.0	19200.0	-52.2	31.3	70.9	-113.0	22500.0	20900.0	-19300.0	19600.0	1.570	-0.012	-0.00082
17:12.3	226.0	18700.0	-52.6	31.5	70.8	-112.0	22000.0	20600.0	-19200.0	19700.0	1.610	-0.012	-0.00091
17:25.5	227.0	21000.0	-52.0	31.1	69.7	-112.0	24700.0	22500.0	-20900.0	10500.0	1.910	-0.012	-0.00036
17:38.7	226.0	9680.0	-52.6	25.9	71.4	-102.0	12600.0	13400.0	-12200.0	10700.0	1.910	-0.012	-0.00036
17:51.8	226.0	9670.0	-52.1	26.2	71.2	-102.0	12600.0	13400.0	-12100.0	10700.0	1.910	-0.012	-0.00036
18:05.0	227.0	9670.0	-51.8	25.3	69.4	-102.0	12600.0	13400.0	-12100.0	10700.0	1.910	-0.012	-0.00036
18:18.2	224.0	9660.0	-51.8	26.2	69.0	-102.0	12600.0	13300.0	-12100.0	10700.0	1.910	-0.012	-0.00036
18:31.3	224.0	9660.0	-51.9	25.5	68.2	-102.0	12600.0	13300.0	-12100.0	10700.0	1.910	-0.012	-0.00036
18:44.5	226.0	9650.0	-51.1	24.9	68.0	-102.0	12600.0	13300.0	-12100.0	10700.0	1.910	-0.012	-0.00036
18:57.6	223.0	9650.0	-51.2	24.9	67.5	-102.0	12600.0	13300.0	-12100.0	10700.0	1.910	-0.012	-0.00036
19:10.8	225.0	9650.0	-49.9	24.3	67.5	-102.0	12600.0	13300.0	-12100.0	10600.0	1.910	-0.012	-0.00036
19:24.0	226.0	9640.0	-50.2	24.3	67.6	-103.0	12600.0	13300.0	-12100.0	10600.0	1.910	-0.012	-0.00036
19:37.1	226.0	9640.0	-50.3	24.4	67.3	-102.0	12600.0	13300.0	-12100.0	10600.0	1.910	-0.012	-0.00035
19:50.3	225.0	9630.0	-50.5	24.7	66.3	-102.0	12600.0	13300.0	-12100.0	10600.0	1.910	-0.012	-0.00036
20:03.5	225.0	9630.0	-50.4	24.1	66.3	-102.0	12600.0	13300.0	-12100.0	10600.0	1.910	-0.012	-0.00035
20:16.6	225.0	9630.0	-49.7	23.9	66.5	-102.0	12600.0	13300.0	-12100.0	10600.0	1.910	-0.012	-0.00035
20:29.8	225.0	9620.0	-49.2	23.5	66.0	-103.0	12600.0	13300.0	-12100.0	10600.0	1.910	-0.012	-0.00035

20:42.9	223.0	9620.0	-49.3	23.8	64.8	-103.0	12600.0	13300.0	-12100.0	10600.0	1.910	-0.012	-0.00036
20:56.1	225.0	9620.0	-49.2	24.4	65.4	-103.0	12600.0	13300.0	-12100.0	10600.0	1.910	-0.012	-0.00035
21:09.3	225.0	9610.0	-49.0	24.3	64.3	-102.0	12600.0	13300.0	-12100.0	10600.0	1.910	-0.012	-0.00035
21:22.4	223.0	9610.0	-48.6	24.1	64.3	-102.0	12600.0	13300.0	-12100.0	10600.0	1.910	-0.012	-0.00035
21:35.6	223.0	9610.0	-48.9	24.0	64.2	-102.0	12600.0	13300.0	-12100.0	10600.0	1.910	-0.012	-0.00035
21:48.7	223.0	9600.0	-48.6	23.0	63.8	-102.0	12600.0	13300.0	-12100.0	10600.0	1.910	-0.012	-0.00035
22:01.9	223.0	9600.0	-49.0	23.5	64.5	-102.0	12600.0	13300.0	-12100.0	10600.0	1.910	-0.012	-0.00035
22:15.1	222.0	9590.0	-48.4	23.7	63.2	-103.0	12600.0	13300.0	-12100.0	10600.0	1.900	-0.012	-0.00035
22:28.2	224.0	9590.0	-48.1	24.1	64.0	-102.0	12600.0	13300.0	-12100.0	10600.0	1.900	-0.012	-0.00035
22:41.4	224.0	9590.0	-48.0	23.3	63.7	-102.0	12600.0	13300.0	-12100.0	10600.0	1.900	-0.012	-0.00035
22:54.6	223.0	9580.0	-48.0	22.8	62.9	-102.0	12600.0	13300.0	-12100.0	10600.0	1.900	-0.012	-0.00035
23:07.7	223.0	9580.0	-47.6	23.5	62.7	-103.0	12600.0	13300.0	-12100.0	10600.0	1.900	-0.012	-0.00035
23:20.9	223.0	9580.0	-48.3	24.0	62.5	-101.0	12600.0	13300.0	-12100.0	10600.0	1.900	-0.012	-0.00035
23:34.0	224.0	9570.0	-47.2	23.5	62.8	-102.0	12600.0	13300.0	-12100.0	10600.0	1.900	-0.012	-0.00035
23:47.2	222.0	9570.0	-47.2	23.5	62.2	-102.0	12600.0	13300.0	-12100.0	10600.0	1.900	-0.012	-0.00035
24:00.4	223.0	9570.0	-47.8	23.7	62.3	-102.0	12600.0	13300.0	-12100.0	10600.0	1.900	-0.012	-0.00035
24:13.5	223.0	9560.0	-47.3	24.1	62.1	-101.0	12500.0	13300.0	-12100.0	10600.0	1.900	-0.012	-0.00035
24:26.7	223.0	9560.0	-46.8	24.3	61.6	-103.0	12500.0	13300.0	-12100.0	10600.0	1.900	-0.012	-0.00035
24:39.8	224.0	9550.0	-46.9	23.4	61.8	-102.0	12500.0	13300.0	-12100.0	10600.0	1.900	-0.012	-0.00035
24:53.0	222.0	9550.0	-47.2	23.1	61.5	-102.0	12500.0	13300.0	-12100.0	10600.0	1.900	-0.012	-0.00035
25:06.2	225.0	9550.0	-46.9	23.5	61.2	-102.0	12500.0	13300.0	-12100.0	10600.0	1.900	-0.012	-0.00035
25:19.3	223.0	9540.0	-46.3	23.3	61.4	-102.0	12500.0	13300.0	-12100.0	10600.0	1.900	-0.012	-0.00035
25:32.5	222.0	9540.0	-47.3	22.7	60.7	-102.0	12500.0	13300.0	-12100.0	10600.0	1.900	-0.012	-0.00035
25:45.7	223.0	9540.0	-46.2	23.6	61.0	-102.0	12500.0	13300.0	-12100.0	10600.0	1.900	-0.012	-0.00035
25:58.8	224.0	9540.0	-46.6	23.2	60.4	-102.0	12500.0	13300.0	-12100.0	10600.0	1.900	-0.012	-0.00035

26:12.0	222.0	9530.0	-46.1	23.1	60.3	-102.0	12500.0	13300.0	-12100.0	10600.0	1.900	-0.012	-0.00035
26:25.1	221.0	9530.0	-46.4	23.7	60.3	-102.0	12500.0	13300.0	-12100.0	10600.0	1.900	-0.012	-0.00035
26:38.3	223.0	9530.0	-46.1	23.1	59.9	-102.0	12500.0	13300.0	-12100.0	10600.0	1.900	-0.012	-0.00035
26:51.5	222.0	9520.0	-45.7	24.0	59.8	-103.0	12500.0	13300.0	-12100.0	10600.0	1.900	-0.012	-0.00035
27:04.6	222.0	9520.0	-45.7	23.3	59.3	-102.0	12500.0	13300.0	-12100.0	10600.0	1.900	-0.012	-0.00035
27:17.8	223.0	9520.0	-45.8	23.8	59.8	-102.0	12500.0	13300.0	-12100.0	10600.0	1.900	-0.012	-0.00035
27:31.0	223.0	9520.0	-45.4	23.5	59.0	-103.0	12500.0	13300.0	-12100.0	10600.0	1.900	-0.012	-0.00035
27:44.1	222.0	9520.0	-45.4	23.5	59.4	-103.0	12500.0	13300.0	-12100.0	10600.0	1.900	-0.012	-0.00034
27:57.3	222.0	9510.0	-45.8	24.0	59.4	-102.0	12500.0	13300.0	-12100.0	10600.0	1.900	-0.012	-0.00034
28:10.4	222.0	9510.0	-45.2	23.4	58.5	-102.0	12500.0	13300.0	-12100.0	10600.0	1.900	-0.012	-0.00035
28:23.6	222.0	9510.0	-44.9	23.6	58.7	-102.0	12500.0	13300.0	-12100.0	10600.0	1.900	-0.012	-0.00034
28:36.8	222.0	9510.0	-45.5	23.0	59.4	-102.0	12500.0	13300.0	-12100.0	10600.0	1.900	-0.012	-0.00034
28:49.9	221.0	9510.0	-45.2	23.8	58.8	-102.0	12500.0	13300.0	-12100.0	10600.0	1.900	-0.012	-0.00035
29:03.1	222.0	9500.0	-45.6	22.8	58.8	-102.0	12500.0	13300.0	-12100.0	10600.0	1.900	-0.012	-0.00034
29:16.2	221.0	9500.0	-45.0	23.3	58.3	-102.0	12500.0	13300.0	-12100.0	10600.0	1.900	-0.012	-0.00034
29:29.9	223.0	9500.0	-45.2	24.1	58.5	-103.0	12500.0	13300.0	-12100.0	10600.0	1.900	-0.012	-0.00034
29:43.1	222.0	9490.0	-45.3	22.3	58.8	-102.0	12500.0	13300.0	-12100.0	10600.0	1.900	-0.012	-0.00034
29:56.3	220.0	9490.0	-45.2	23.1	58.1	-102.0	12500.0	13300.0	-12100.0	10600.0	1.900	-0.012	-0.00034
30:09.5	220.0	9490.0	-44.8	23.6	58.2	-103.0	12500.0	13300.0	-12100.0	10600.0	1.900	-0.012	-0.00035
30:22.7	220.0	9490.0	-44.4	23.1	57.8	-102.0	12500.0	13300.0	-12100.0	10600.0	1.900	-0.012	-0.00035
30:36.0	218.0	9490.0	-44.1	23.0	57.7	-102.0	12500.0	13300.0	-12100.0	10600.0	1.900	-0.012	-0.00035
30:49.2	220.0	9480.0	-44.1	23.5	57.0	-103.0	12500.0	13300.0	-12100.0	10600.0	1.900	-0.012	-0.00035
31:02.4	221.0	9440.0	-44.3	27.4	58.7	-102.0	10200.0	11500.0	-10400.0	8740.0	1.750	-0.012	-0.00018
31:15.6	222.0	6450.0	-44.1	23.8	58.5	-101.0	10100.0	11400.0	-10300.0	8650.0	1.740	-0.012	-0.00017
31:28.7	221.0	6330.0	-43.8	24.4	57.9	-102.0	10000.0	11300.0	-10200.0	8580.0	1.740	-0.012	-0.00018

31:41.9	221.0	6340.0	-44.3	24.3	57.6	-103.0	10000.0	11300.0	-10200.0	8580.0	1.740	-0.012	-0.00018
31:55.1	221.0	6350.0	-44.3	24.2	57.6	-102.0	10000.0	11300.0	-10200.0	8580.0	1.740	-0.012	-0.00018
32:08.2	222.0	6350.0	-43.9	24.6	56.8	-102.0	10000.0	11300.0	-10200.0	8580.0	1.740	-0.012	-0.00018
32:21.4	221.0	6360.0	-43.7	24.3	57.3	-102.0	10000.0	11300.0	-10200.0	8580.0	1.740	-0.012	-0.00018
32:34.5	221.0	6360.0	-43.8	24.1	57.2	-103.0	10300.0	11600.0	-10500.0	8870.0	1.790	-0.012	-0.00034
32:47.7	221.0	11500.0	-44.1	16.0	55.8	-102.0	14800.0	15200.0	-14100.0	13000.0	2.040	-0.012	-0.00058
33:01.0	221.0	15900.0	-43.8	17.0	55.9	-103.0	19300.0	18800.0	-17600.0	17900.0	2.280	-0.012	-0.00082
33:14.1	220.0	18900.0	-44.0	16.1	55.2	-102.0	21800.0	20800.0	-19500.0	20200.0	2.380	-0.012	-0.00086
33:27.3	222.0	19100.0	-43.6	16.4	55.2	-102.0	22000.0	21000.0	-19700.0	20400.0	2.390	-0.012	-0.00085
33:40.4	220.0	19000.0	-43.5	16.4	55.0	-102.0	21900.0	20900.0	-19700.0	20300.0	2.390	-0.012	-0.00085
33:53.6	221.0	19000.0	-44.1	16.5	54.4	-102.0	21900.0	20900.0	-19700.0	20300.0	2.390	-0.012	-0.00085
34:06.8	220.0	19000.0	-44.0	16.4	54.7	-102.0	21900.0	20900.0	-19700.0	20300.0	2.390	-0.012	-0.00085
34:19.9	220.0	19000.0	-43.7	16.2	54.5	-102.0	21900.0	20900.0	-19600.0	20300.0	2.390	-0.012	-0.00085
34:33.1	220.0	18900.0	-43.1	15.6	54.6	-102.0	21900.0	20900.0	-19600.0	20300.0	2.390	-0.012	-0.00085
34:46.2	220.0	18900.0	-42.7	15.9	54.9	-101.0	21900.0	20900.0	-19600.0	20300.0	2.390	-0.012	-0.00085
34:59.4	220.0	18900.0	-42.9	16.1	54.8	-102.0	21900.0	20900.0	-19600.0	20300.0	2.390	-0.012	-0.00085
35:12.6	220.0	18900.0	-42.4	16.1	54.5	-102.0	21800.0	20900.0	-19600.0	20300.0	2.390	-0.012	-0.00085
35:25.7	220.0	18900.0	-42.9	15.2	55.1	-102.0	21800.0	20900.0	-19600.0	20300.0	2.390	-0.012	-0.00085
35:38.9	220.0	18900.0	-43.3	16.1	54.2	-102.0	21800.0	20900.0	-19600.0	20300.0	2.390	-0.012	-0.00085
35:52.1	220.0	18900.0	-42.7	16.4	54.7	-102.0	21800.0	20900.0	-19600.0	20300.0	2.390	-0.012	-0.00085
36:05.2	221.0	18900.0	-42.7	16.0	53.7	-102.0	21800.0	20900.0	-19600.0	20300.0	2.390	-0.012	-0.00085
36:18.4	221.0	18900.0	-42.7	15.5	53.6	-102.0	21800.0	20900.0	-19600.0	20300.0	2.390	-0.012	-0.00085
36:31.5	221.0	18900.0	-43.2	16.3	53.6	-102.0	21800.0	20900.0	-19600.0	20300.0	2.390	-0.012	-0.00085
36:44.7	221.0	18900.0	-42.5	15.9	53.5	-103.0	21800.0	20900.0	-19600.0	20300.0	2.390	-0.012	-0.00085
36:57.9	221.0	18900.0	-42.9	15.2	53.0	-102.0	21800.0	20900.0	-19600.0	20200.0	2.390	-0.012	-0.00085

37:11.0	221.0	18900.0	-43.0	16.7	53.9	-103.0	21800.0	20900.0	-19600.0	20200.0	2.390	-0.012	-0.00085
37:24.2	220.0	18900.0	-42.7	15.9	53.1	-103.0	21800.0	20900.0	-19600.0	20200.0	2.390	-0.012	-0.00085
37:37.3	220.0	18900.0	-43.3	15.8	53.3	-102.0	21800.0	20900.0	-19600.0	20200.0	2.390	-0.012	-0.00085
37:50.5	220.0	18900.0	-42.0	15.7	53.1	-103.0	21800.0	20900.0	-19600.0	20200.0	2.390	-0.012	-0.00085
38:03.7	222.0	18800.0	-42.5	15.8	54.0	-102.0	21800.0	20900.0	-19600.0	20200.0	2.390	-0.012	-0.00085
38:16.8	220.0	18800.0	-43.2	15.4	52.7	-102.0	21800.0	20900.0	-19600.0	20200.0	2.390	-0.012	-0.00085
38:30.0	219.0	18800.0	-42.7	16.6	53.0	-103.0	21800.0	20800.0	-19600.0	20200.0	2.390	-0.012	-0.00085
38:43.2	220.0	18800.0	-43.3	16.2	53.1	-102.0	21800.0	20800.0	-19600.0	20200.0	2.390	-0.012	-0.00085
38:56.3	221.0	18800.0	-43.0	15.8	53.0	-103.0	21800.0	20800.0	-19600.0	20200.0	2.390	-0.012	-0.00084
39:09.5	221.0	18800.0	-43.1	16.2	53.2	-103.0	21800.0	20800.0	-19600.0	20200.0	2.390	-0.012	-0.00084
39:22.6	220.0	18800.0	-43.4	15.8	53.3	-103.0	21800.0	20800.0	-19600.0	20200.0	2.390	-0.012	-0.00085
39:35.8	219.0	18800.0	-42.2	16.1	52.9	-103.0	21800.0	20800.0	-19600.0	20200.0	2.390	-0.012	-0.00085
39:49.0	221.0	18800.0	-42.6	15.6	52.7	-102.0	21800.0	20800.0	-19600.0	20200.0	2.390	-0.012	-0.00084
40:02.1	221.0	18800.0	-42.4	15.9	53.2	-102.0	21800.0	20800.0	-19600.0	20200.0	2.390	-0.012	-0.00084
40:15.3	221.0	18800.0	-42.3	15.4	53.4	-101.0	21800.0	20800.0	-19600.0	20200.0	2.390	-0.012	-0.00084
40:28.4	221.0	18800.0	-42.2	15.7	52.9	-102.0	21800.0	20800.0	-19600.0	20200.0	2.390	-0.012	-0.00084
40:41.6	222.0	18800.0	-41.8	15.7	52.5	-103.0	21800.0	20800.0	-19600.0	20200.0	2.390	-0.012	-0.00085
40:54.8	221.0	18800.0	-41.8	15.8	52.8	-102.0	21800.0	20800.0	-19600.0	20200.0	2.390	-0.012	-0.00084
41:08.0	222.0	18800.0	-42.9	16.0	52.8	-102.0	21700.0	20800.0	-19600.0	20200.0	2.390	-0.012	-0.00084
41:21.1	220.0	18800.0	-41.9	15.8	52.8	-102.0	21700.0	20800.0	-19600.0	20200.0	2.390	-0.012	-0.00084
41:34.3	221.0	18800.0	-42.0	16.8	51.4	-102.0	21700.0	20800.0	-19600.0	20200.0	2.380	-0.012	-0.00083
41:47.5	220.0	7650.0	-42.4	23.5	53.0	-101.0	9810.0	11400.0	-10200.0	8060.0	1.720	-0.012	0.00009
42:00.7	221.0	29.2	-85.3	1060.0	152.0	-104.0	3090.0	6570.0	-6050.0	3470.0	1.060	-0.012	0.00023
42:14.0	219.0	28.3	-87.0	1070.0	152.0	-104.0	3050.0	6550.0	-6050.0	3470.0	1.050	-0.012	0.00023
42:27.2	222.0	27.8	-86.1	1070.0	152.0	-104.0	3040.0	6550.0	-6050.0	3470.0	1.050	-0.012	0.00023
42:40.3	221.0	27.5	-86.7	1070.0	152.0	-105.0	3030.0	6540.0	-6050.0	3460.0	1.050	-0.012	0.00023

42:53.5	219.0	28.9	-86.9	1070.0	153.0	-104.0	3030.0	6540.0	-6050.0	3460.0	1.050	-0.012	0.00023
43:06.6	220.0	29.7	-86.8	1070.0	152.0	-104.0	3030.0	6540.0	-6050.0	3460.0	1.050	-0.012	0.00023
43:19.8	220.0	28.5	-86.3	1060.0	153.0	-105.0	3030.0	6540.0	-6050.0	3460.0	1.050	-0.012	0.00023
43:33.0	219.0	27.5	-86.5	1060.0	152.0	-104.0	3020.0	6540.0	-6050.0	3460.0	1.050	-0.012	0.00023
43:46.1	221.0	27.8	-86.3	1060.0	152.0	-104.0	3020.0	6540.0	-6050.0	3460.0	1.050	-0.012	0.00023
43:59.3	220.0	29.2	-86.4	1060.0	152.0	-104.0	3020.0	6540.0	-6050.0	3470.0	1.050	-0.012	0.00023
44:12.5	221.0	28.0	-85.8	1060.0	152.0	-102.0	3020.0	6530.0	-6050.0	3460.0	1.050	-0.012	0.00023
44:25.7	220.0	28.4	-84.4	1090.0	166.0	-114.0	2500.0	6370.0	-5580.0	3290.0	1.020	-0.012	0.00023
44:38.9	220.0	29.1	-124.0	1240.0	189.0	-119.0	2370.0	6290.0	-5620.0	3220.0	1.010	-0.012	0.00023
44:52.0	222.0	28.8	-119.0	1250.0	190.0	-122.0	2350.0	6270.0	-5620.0	3190.0	1.020	-0.012	0.00023
45:05.2	220.0	29.7	-118.0	1250.0	189.0	-121.0	2350.0	6270.0	-5620.0	3190.0	1.020	-0.012	0.00023
45:18.3	219.0	28.0	-118.0	1250.0	189.0	-121.0	2350.0	6270.0	-5620.0	3190.0	1.020	-0.012	0.00023
45:31.5	219.0	28.0	-119.0	1250.0	188.0	-122.0	2350.0	6270.0	-5630.0	3190.0	1.020	-0.012	0.00024
45:44.7	220.0	28.9	-119.0	1240.0	188.0	-122.0	2350.0	6270.0	-5630.0	3190.0	1.020	-0.012	0.00023
45:57.8	221.0	27.5	-118.0	1240.0	189.0	-121.0	2350.0	6270.0	-5630.0	3190.0	1.020	-0.012	0.00023
46:11.0	220.0	26.9	-118.0	1240.0	187.0	-121.0	2350.0	6270.0	-5630.0	3200.0	1.020	-0.012	0.00023
46:24.1	220.0	27.3	-118.0	1240.0	188.0	-121.0	2350.0	6270.0	-5630.0	3200.0	1.020	-0.012	0.00023
46:37.3	221.0	28.1	-118.0	1240.0	188.0	-121.0	2350.0	6270.0	-5630.0	3190.0	1.020	-0.012	0.00023
46:50.5	220.0	27.7	-118.0	1240.0	188.0	-120.0	2350.0	6270.0	-5630.0	3190.0	1.020	-0.012	0.00023
47:03.6	218.0	27.7	-118.0	1240.0	188.0	-121.0	2360.0	6270.0	-5630.0	3200.0	1.020	-0.012	0.00023
47:16.8	220.0	30.1	-118.0	1240.0	189.0	-119.0	2360.0	6270.0	-5630.0	3190.0	1.020	-0.012	0.00023
47:30.0	219.0	29.5	-118.0	1240.0	189.0	-120.0	2360.0	6270.0	-5630.0	3200.0	1.010	-0.012	0.00023
47:43.1	218.0	28.6	-117.0	1250.0	190.0	-112.0	2350.0	6270.0	-5630.0	3190.0	1.010	-0.012	0.00023
47:56.3	219.0	28.5	-117.0	1250.0	191.0	-111.0	2360.0	6270.0	-5630.0	3190.0	1.010	-0.012	0.00023
48:09.4	218.0	27.7	-124.0	1310.0	209.0	-127.0	2180.0	6210.0	-5820.0	3390.0	1.010	-0.012	0.00028
48:22.6	219.0	29.1	-131.0	1360.0	225.0	-150.0	1920.0	6130.0	-5960.0	3480.0	1.010	-0.012	0.00028
48:35.8	220.0	29.2	-131.0	1350.0	225.0	-149.0	1930.0	6130.0	-5950.0	3470.0	1.010	-0.012	0.00028
48:48.9	218.0	29.1	-131.0	1350.0	225.0	-150.0	1930.0	6130.0	-5950.0	3470.0	1.010	-0.012	0.00028
49:02.1	220.0	28.6	-131.0	1350.0	225.0	-149.0	1930.0	6130.0	-5950.0	3470.0	1.010	-0.012	0.00028
49:15.2	220.0	30.7	-131.0	1350.0	225.0	-149.0	1930.0	6130.0	-5950.0	3470.0	1.010	-0.012	0.00028
49:28.4	219.0	28.0	-131.0	1350.0	226.0	-149.0	1930.0	6130.0	-5950.0	3470.0	1.010	-0.012	0.00028
49:41.6	220.0	28.5	-131.0	1340.0	225.0	-148.0	1940.0	6130.0	-5950.0	3470.0	1.010	-0.012	0.00028
49:54.7	219.0	26.3	-131.0	1340.0	224.0	-149.0	1940.0	6130.0	-5950.0	3470.0	1.010	-0.012	0.00028
50:07.9	219.0	29.2	-131.0	1340.0	225.0	-148.0	1940.0	6130.0	-5950.0	3470.0	1.010	-0.012	0.00028
50:21.1	219.0	29.2	-131.0	1340.0	225.0	-148.0	1940.0	6130.0	-5950.0	3470.0	1.010	-0.012	0.00028
50:34.2	219.0	28.2	-130.0	1340.0	225.0	-148.0	1940.0	6130.0	-5950.0	3470.0	1.010	-0.012	0.00028
50:47.4	220.0	28.1	-131.0	1340.0	225.0	-148.0	1940.0	6130.0	-5950.0	3470.0	1.010	-0.012	0.00023

51:00.5	221.0	27.5	-116.0	1210.0	190.0	-109.0	2310.0	6260.0	-5630.0	3190.0	1.010	-0.012	0.00023
51:13.7	220.0	26.5	-114.0	1210.0	189.0	-110.0	2310.0	6260.0	-5630.0	3190.0	1.010	-0.012	0.00023
51:26.9	218.0	27.4	-113.0	1210.0	189.0	-110.0	2310.0	6260.0	-5630.0	3190.0	1.010	-0.012	0.00023
51:40.0	220.0	27.8	-114.0	1210.0	188.0	-110.0	2310.0	6260.0	-5630.0	3190.0	1.010	-0.012	0.00023
51:53.2	219.0	27.8	-114.0	1210.0	189.0	-110.0	2310.0	6260.0	-5630.0	3190.0	1.010	-0.012	0.00023
52:06.3	221.0	29.7	-114.0	1210.0	188.0	-110.0	2310.0	6260.0	-5630.0	3190.0	1.010	-0.012	0.00023
52:19.5	219.0	30.4	-114.0	1210.0	188.0	-109.0	2310.0	6260.0	-5630.0	3190.0	1.010	-0.012	0.00023
52:32.7	219.0	26.9	-114.0	1210.0	188.0	-110.0	2310.0	6260.0	-5630.0	3190.0	1.010	-0.012	0.00023
52:45.8	218.0	27.6	-113.0	1210.0	188.0	-110.0	2310.0	6260.0	-5630.0	3190.0	1.010	-0.012	0.00023
52:59.0	220.0	27.0	-114.0	1210.0	188.0	-111.0	2310.0	6260.0	-5630.0	3190.0	0.935	-0.013	0.00027
53:12.2	768.0	28.0	-228.0	1810.0	381.0	-473.0	1780.0	5830.0	-5270.0	2850.0	0.927	-0.012	0.00031
53:25.3	1990.0	28.2	-469.0	3920.0	2070.0	-1680.0	840.0	4740.0	-4480.0	2200.0	0.681	-0.012	0.00041
53:38.5	3720.0	27.5	-875.0	6480.0	5190.0	-3170.0	429.0	3640.0	-3700.0	1720.0	0.424	-0.012	0.00052
53:51.6	5810.0	27.5	-1680.0	9100.0	8030.0	-5720.0	233.0	2550.0	-2850.0	1310.0	0.170	-0.012	0.00061
54:04.9	6340.0	27.3	-1990.0	9520.0	8430.0	-6130.0	220.0	2480.0	-2830.0	1340.0	0.170	-0.012	0.00060
54:18.1	6300.0	29.4	-1980.0	9490.0	8410.0	-6100.0	221.0	2490.0	-2840.0	1350.0	0.170	-0.012	0.00060
54:31.2	6280.0	26.8	-1970.0	9470.0	8390.0	-6080.0	223.0	2490.0	-2850.0	1360.0	0.170	-0.012	0.00060
54:44.4	6240.0	28.8	-2010.0	9650.0	8490.0	-6370.0	238.0	2390.0	-3190.0	1550.0	0.166	-0.012	0.00066
54:57.5	6190.0	27.4	-1970.0	9670.0	8510.0	-6460.0	252.0	2350.0	-3250.0	1600.0	0.164	-0.012	0.00066
55:10.7	6180.0	26.4	-1960.0	9660.0	8500.0	-6440.0	252.0	2350.0	-3240.0	1600.0	0.164	-0.012	0.00066
55:23.9	6160.0	28.5	-1950.0	9640.0	8490.0	-6430.0	253.0	2360.0	-3240.0	1600.0	0.164	-0.012	0.00066
55:37.0	6150.0	28.4	-1940.0	9630.0	8490.0	-6420.0	253.0	2360.0	-3240.0	1600.0	0.164	-0.012	0.00066
55:50.2	6140.0	28.5	-1940.0	9620.0	8480.0	-6410.0	253.0	2370.0	-3240.0	1600.0	0.164	-0.012	0.00066
56:03.4	6130.0	27.6	-1930.0	9610.0	8470.0	-6400.0	252.0	2370.0	-3240.0	1600.0	0.164	-0.012	0.00065
56:16.5	6120.0	28.8	-1930.0	9610.0	8470.0	-6390.0	254.0	2380.0	-3250.0	1600.0	0.164	-0.012	0.00065
56:29.7	6110.0	28.4	-1920.0	9600.0	8460.0	-6380.0	254.0	2380.0	-3250.0	1610.0	0.164	-0.012	0.00065
56:42.8	6100.0	26.9	-1920.0	9590.0	8450.0	-6370.0	254.0	2380.0	-3250.0	1610.0	0.164	-0.012	0.00065
56:56.0	6090.0	27.0	-1910.0	9580.0	8450.0	-6360.0	254.0	2390.0	-3250.0	1610.0	0.164	-0.012	0.00065
57:09.2	6080.0	28.3	-1910.0	9580.0	8440.0	-6360.0	254.0	2390.0	-3250.0	1610.0	0.164	-0.012	0.00065
57:22.3	6080.0	28.5	-1910.0	9570.0	8440.0	-6350.0	255.0	2390.0	-3250.0	1610.0	0.165	-0.012	0.00065
57:35.5	6070.0	28.3	-1910.0	9560.0	8440.0	-6350.0	255.0	2390.0	-3250.0	1610.0	0.165	-0.012	0.00065
57:48.6	6060.0	28.5	-1900.0	9560.0	8430.0	-6340.0	255.0	2400.0	-3260.0	1610.0	0.165	-0.012	0.00064
58:01.8	6000.0	27.2	-1900.0	9520.0	8380.0	-6240.0	257.0	2420.0	-3270.0	1620.0	0.165	-0.012	0.00065
58:15.0	6000.0	26.4	-1890.0	9520.0	8370.0	-6240.0	257.0	2420.0	-3280.0	1620.0	0.165	-0.012	0.00065
58:28.1	5990.0	27.1	-1890.0	9510.0	8370.0	-6230.0	258.0	2420.0	-3280.0	1620.0	0.166	-0.012	0.00065
58:41.3	5980.0	28.5	-1890.0	9510.0	8370.0	-6230.0	258.0	2430.0	-3280.0	1620.0	0.166	-0.012	0.00064
58:54.4	5990.0	28.3	-1820.0	9190.0	8160.0	-5750.0	221.0	2550.0	-2850.0	1370.0	0.174	-0.012	0.00058

59:07.6	5980.0	28.6	-1820.0	9190.0	8160.0	-5750.0	222.0	2550.0	-2860.0	1370.0	0.174	-0.012	0.00058
59:20.8	218.0	26.1	-161.0	1350.0	433.0	-379.0	1170.0	5390.0	-5230.0	2740.0	0.635	-0.012	0.00025
59:34.0	213.0	29.0	-162.0	1350.0	433.0	-382.0	1170.0	5390.0	-5230.0	2740.0	0.636	-0.012	0.00025
59:47.2	213.0	28.6	-162.0	1350.0	433.0	-383.0	1170.0	5390.0	-5230.0	2750.0	0.636	-0.012	0.00025
00:00.3	210.0	29.5	-162.0	1350.0	432.0	-384.0	1170.0	5390.0	-5230.0	2750.0	0.637	-0.012	0.00025
00:13.5	211.0	27.3	-162.0	1350.0	432.0	-385.0	1170.0	5390.0	-5230.0	2740.0	0.637	-0.012	0.00025
00:26.7	212.0	29.1	-162.0	1350.0	431.0	-386.0	1170.0	5400.0	-5230.0	2740.0	0.637	-0.012	0.00025
00:39.8	213.0	29.2	-162.0	1350.0	432.0	-386.0	1170.0	5390.0	-5230.0	2750.0	0.637	-0.012	0.00024
00:53.0	212.0	30.0	-163.0	1350.0	431.0	-386.0	1170.0	5400.0	-5230.0	2750.0	0.637	-0.012	0.00025
01:06.1	213.0	27.9	-163.0	1350.0	431.0	-386.0	1170.0	5390.0	-5230.0	2740.0	0.637	-0.012	0.00024
01:19.3	211.0	28.8	-163.0	1350.0	431.0	-387.0	1170.0	5400.0	-5230.0	2750.0	0.637	-0.012	0.00025
01:32.5	211.0	28.8	-163.0	1350.0	430.0	-387.0	1170.0	5400.0	-5230.0	2750.0	0.637	-0.012	0.00025
01:45.6	212.0	27.2	-163.0	1350.0	431.0	-387.0	1170.0	5400.0	-5230.0	2740.0	0.637	-0.012	0.00025
01:58.8	211.0	27.7	-163.0	1350.0	430.0	-387.0	1170.0	5400.0	-5230.0	2740.0	0.637	-0.012	0.00024
02:12.0	212.0	28.5	-163.0	1350.0	430.0	-387.0	1170.0	5390.0	-5230.0	2740.0	0.637	-0.012	0.00024
02:25.1	210.0	28.1	-163.0	1350.0	430.0	-387.0	1170.0	5400.0	-5230.0	2740.0	0.637	-0.012	0.00024
02:38.3	211.0	27.9	-163.0	1350.0	430.0	-387.0	1170.0	5390.0	-5230.0	2740.0	0.637	-0.012	0.00025
02:51.4	210.0	27.0	-163.0	1350.0	430.0	-387.0	1170.0	5390.0	-5230.0	2740.0	0.637	-0.012	0.00025
03:04.6	211.0	27.5	-163.0	1350.0	429.0	-388.0	1170.0	5390.0	-5230.0	2740.0	0.637	-0.012	0.00025
03:17.8	210.0	27.0	-163.0	1350.0	429.0	-388.0	1170.0	5390.0	-5230.0	2750.0	0.638	-0.012	0.00025
03:30.9	211.0	26.9	-163.0	1350.0	430.0	-388.0	1170.0	5390.0	-5230.0	2740.0	0.638	-0.012	0.00025
03:44.1	210.0	29.6	-163.0	1350.0	429.0	-388.0	1170.0	5390.0	-5230.0	2740.0	0.638	-0.012	0.00025
03:57.3	211.0	28.5	-162.0	1350.0	429.0	-388.0	1170.0	5390.0	-5230.0	2740.0	0.638	-0.012	0.00025
04:10.4	209.0	26.9	-163.0	1350.0	429.0	-388.0	1170.0	5390.0	-5230.0	2740.0	0.638	-0.012	0.00025
04:23.6	211.0	27.8	-163.0	1350.0	429.0	-388.0	1170.0	5390.0	-5230.0	2740.0	0.638	-0.012	0.00025
04:36.7	209.0	28.7	-162.0	1350.0	429.0	-388.0	1170.0	5390.0	-5230.0	2740.0	0.638	-0.012	0.00025
04:49.9	210.0	28.9	-162.0	1350.0	430.0	-388.0	1170.0	5390.0	-5230.0	2740.0	0.638	-0.012	0.00025
05:03.1	209.0	28.2	-162.0	1350.0	429.0	-389.0	1170.0	5390.0	-5230.0	2740.0	0.638	-0.012	0.00025
05:16.2	209.0	28.3	-162.0	1350.0	429.0	-388.0	1170.0	5390.0	-5230.0	2740.0	0.638	-0.012	0.00025
05:29.4	210.0	28.5	-162.0	1350.0	429.0	-388.0	1170.0	5390.0	-5230.0	2740.0	0.638	-0.012	0.00025
05:42.5	209.0	29.4	-162.0	1350.0	429.0	-388.0	1170.0	5390.0	-5230.0	2740.0	0.638	-0.012	0.00025
05:55.7	209.0	32.5	-162.0	1350.0	430.0	-388.0	1170.0	5390.0	-5230.0	2740.0	0.638	-0.012	0.00025
06:08.9	206.0	33.2	-162.0	1350.0	430.0	-387.0	1170.0	5390.0	-5230.0	2740.0	0.638	-0.012	0.00025
06:22.0	208.0	31.5	-162.0	1350.0	430.0	-389.0	1170.0	5390.0	-5230.0	2740.0	0.638	-0.012	0.00025
06:35.2	207.0	34.0	-161.0	1350.0	430.0	-387.0	1170.0	5390.0	-5230.0	2740.0	0.638	-0.012	0.00025
06:48.4	206.0	34.5	-161.0	1350.0	430.0	-388.0	1170.0	5390.0	-5230.0	2740.0	0.638	-0.012	0.00025
07:01.5	206.0	34.1	-162.0	1350.0	430.0	-387.0	1170.0	5390.0	-5230.0	2740.0	0.638	-0.012	0.00025

07:14.7	206.0	34.1	-160.0	1350.0	431.0	-387.0	1170.0	5390.0	-5230.0	2740.0	0.638	-0.012	0.00025
07:27.8	206.0	36.4	-161.0	1350.0	432.0	-387.0	1170.0	5390.0	-5230.0	2740.0	0.638	-0.012	0.00025
07:41.0	206.0	37.2	-161.0	1350.0	431.0	-387.0	1170.0	5390.0	-5230.0	2740.0	0.638	-0.012	0.00024
07:54.2	205.0	35.8	-161.0	1350.0	430.0	-387.0	1170.0	5390.0	-5230.0	2740.0	0.638	-0.012	0.00024
08:07.3	205.0	37.0	-161.0	1350.0	431.0	-387.0	1170.0	5390.0	-5230.0	2740.0	0.638	-0.012	0.00025
08:20.5	205.0	36.7	-160.0	1350.0	431.0	-387.0	1170.0	5390.0	-5230.0	2740.0	0.638	-0.012	0.00025
08:33.6	206.0	37.6	-161.0	1350.0	432.0	-387.0	1170.0	5390.0	-5230.0	2740.0	0.638	-0.012	0.00025
08:46.8	204.0	37.6	-160.0	1350.0	431.0	-387.0	1170.0	5390.0	-5230.0	2740.0	0.638	-0.012	0.00025
09:00.0	205.0	37.0	-161.0	1350.0	432.0	-386.0	1170.0	5390.0	-5230.0	2740.0	0.638	-0.012	0.00025
09:13.1	205.0	36.5	-161.0	1350.0	431.0	-387.0	1170.0	5390.0	-5230.0	2740.0	0.638	-0.012	0.00024
09:26.3	204.0	36.1	-160.0	1350.0	431.0	-387.0	1170.0	5390.0	-5230.0	2740.0	0.638	-0.012	0.00024
09:39.5	207.0	35.3	-161.0	1350.0	431.0	-388.0	1170.0	5390.0	-5230.0	2740.0	0.638	-0.012	0.00025
09:52.6	204.0	35.3	-161.0	1350.0	431.0	-387.0	1170.0	5390.0	-5230.0	2740.0	0.638	-0.012	0.00025
10:05.8	205.0	35.8	-161.0	1350.0	431.0	-388.0	1170.0	5390.0	-5230.0	2740.0	0.639	-0.012	0.00025
10:18.9	205.0	36.9	-160.0	1350.0	432.0	-387.0	1170.0	5390.0	-5230.0	2740.0	0.640	-0.012	0.00025
10:32.1	204.0	36.1	-161.0	1350.0	431.0	-387.0	1170.0	5390.0	-5230.0	2740.0	0.640	-0.012	0.00024
10:45.3	205.0	36.0	-160.0	1350.0	431.0	-387.0	1170.0	5390.0	-5230.0	2740.0	0.640	-0.012	0.00024
10:58.4	205.0	37.5	-161.0	1350.0	431.0	-387.0	1170.0	5390.0	-5220.0	2740.0	0.640	-0.012	0.00024
11:11.6	204.0	38.9	-161.0	1350.0	432.0	-387.0	1170.0	5390.0	-5230.0	2740.0	0.640	-0.012	0.00024
11:24.7	204.0	39.3	-161.0	1350.0	432.0	-387.0	1170.0	5390.0	-5220.0	2740.0	0.640	-0.012	0.00024
11:37.9	206.0	41.1	-160.0	1350.0	433.0	-386.0	1170.0	5390.0	-5220.0	2740.0	0.640	-0.012	0.00024
11:51.1	203.0	42.0	-160.0	1350.0	433.0	-386.0	1180.0	5390.0	-5220.0	2740.0	0.640	-0.012	0.00024
12:04.2	203.0	42.6	-160.0	1350.0	433.0	-387.0	1180.0	5390.0	-5230.0	2740.0	0.640	-0.012	0.00024
12:17.4	203.0	41.6	-160.0	1350.0	433.0	-387.0	1180.0	5390.0	-5220.0	2740.0	0.640	-0.012	0.00024
12:30.6	202.0	44.8	-159.0	1350.0	434.0	-386.0	1180.0	5390.0	-5220.0	2740.0	0.640	-0.012	0.00025
12:43.7	202.0	43.7	-160.0	1350.0	434.0	-386.0	1180.0	5390.0	-5220.0	2740.0	0.640	-0.012	0.00024
12:56.9	203.0	42.5	-160.0	1350.0	432.0	-386.0	1180.0	5390.0	-5230.0	2740.0	0.640	-0.012	0.00024
13:10.0	203.0	42.9	-159.0	1350.0	433.0	-386.0	1180.0	5390.0	-5230.0	2740.0	0.640	-0.012	0.00025
13:23.2	202.0	42.7	-160.0	1350.0	433.0	-386.0	1180.0	5390.0	-5220.0	2740.0	0.640	-0.012	0.00025
13:36.4	202.0	43.0	-160.0	1350.0	433.0	-386.0	1180.0	5390.0	-5220.0	2740.0	0.640	-0.012	0.00025
13:49.5	201.0	42.5	-160.0	1350.0	433.0	-386.0	1180.0	5390.0	-5220.0	2740.0	0.640	-0.012	0.00025
14:02.7	202.0	41.6	-159.0	1350.0	433.0	-386.0	1170.0	5390.0	-5220.0	2740.0	0.640	-0.012	0.00025
14:15.8	202.0	42.5	-160.0	1350.0	433.0	-386.0	1180.0	5390.0	-5220.0	2740.0	0.640	-0.012	0.00025
14:29.0	203.0	42.1	-160.0	1350.0	432.0	-386.0	1180.0	5390.0	-5220.0	2740.0	0.640	-0.012	0.00024
14:42.2	202.0	41.6	-159.0	1350.0	433.0	-386.0	1180.0	5390.0	-5220.0	2740.0	0.640	-0.012	0.00024
14:55.3	202.0	41.8	-160.0	1350.0	432.0	-386.0	1170.0	5390.0	-5220.0	2740.0	0.640	-0.012	0.00025
15:08.5	204.0	39.6	-159.0	1350.0	432.0	-386.0	1170.0	5390.0	-5220.0	2740.0	0.640	-0.012	0.00024

15:21.7	203.0	40.2	-159.0	1350.0	432.0	-386.0	1180.0	5390.0	-5220.0	2740.0	0.640	-0.012	0.00024
15:34.8	203.0	40.0	-160.0	1350.0	433.0	-387.0	1170.0	5390.0	-5220.0	2740.0	0.640	-0.012	0.00024
15:48.0	203.0	40.8	-159.0	1350.0	432.0	-387.0	1170.0	5390.0	-5220.0	2740.0	0.640	-0.012	0.00025
16:01.1	202.0	40.4	-160.0	1350.0	432.0	-386.0	1170.0	5390.0	-5220.0	2740.0	0.640	-0.012	0.00024
35:43.2	237.0	18.3	-4580.0	5330.0	3370.0	-1840.0	588.0	4370.0	-4190.0	1050.0	-0.036	0.336	0.00023
35:56.4	239.0	18.0	-4580.0	5330.0	3370.0	-1850.0	588.0	4370.0	-4190.0	1050.0	-0.036	0.336	0.00023
36:09.6	237.0	17.3	-4580.0	5330.0	3370.0	-1840.0	588.0	4370.0	-4190.0	1050.0	-0.036	0.336	0.00023
36:22.7	2380.0	17.3	-5780.0	6280.0	4210.0	-2640.0	290.0	3700.0	-3620.0	757.0	-0.036	0.422	0.00041
36:35.9	5070.0	17.2	-7310.0	7730.0	5740.0	-4630.0	95.8	2670.0	-2660.0	581.0	-0.036	0.569	0.00055
36:49.1	7250.0	17.3	-8640.0	8890.0	6920.0	-6170.0	41.7	2030.0	-2020.0	488.0	-0.036	0.718	0.00078
37:02.3	11000.0	16.4	-11900.0	11600.0	9670.0	-9800.0	37.2	906.0	-868.0	286.0	-0.036	0.966	0.00100
37:15.4	13000.0	17.3	-13900.0	13200.0	11300.0	-12000.0	37.1	381.0	-470.0	199.0	-0.036	1.090	0.00114
37:28.6	17000.0	18.0	-18400.0	16900.0	14900.0	-17100.0	36.8	26.9	-173.0	86.5	-0.036	1.330	0.00138
37:41.8	21000.0	16.3	-22300.0	20100.0	18200.0	-21600.0	36.3	21.6	-80.5	78.9	-0.036	1.570	0.00163
37:55.0	25100.0	17.7	-26100.0	23500.0	21700.0	-26400.0	37.3	21.3	-55.6	81.9	-0.036	1.820	0.00183
38:08.2	28400.0	17.0	-29800.0	26800.0	24900.0	-30100.0	36.0	21.7	-56.3	82.6	-0.036	2.000	0.00192
38:21.4	29100.0	14.1	-30700.0	27800.0	26000.0	-31000.0	35.2	21.0	-55.2	82.3	-0.036	2.090	0.00195
38:34.6	30100.0	16.0	-31700.0	29000.0	27100.0	-32000.0	35.4	20.9	-55.2	83.3	-0.036	2.200	0.00197
38:47.7	30900.0	14.9	-32300.0	30000.0	28200.0	-32800.0	36.0	21.1	-55.3	82.7	-0.036	2.330	0.00197
39:00.9	30700.0	15.9	-31900.0	30100.0	28200.0	-32200.0	34.5	20.9	-55.7	83.1	-0.036	2.340	0.00196
39:14.0	30600.0	15.3	-31700.0	30000.0	28100.0	-32000.0	34.1	21.1	-54.5	82.8	-0.036	2.340	0.00195
39:27.2	30500.0	16.2	-31700.0	29900.0	28100.0	-31900.0	34.3	20.0	-54.0	83.4	-0.036	2.340	0.00195
39:40.4	30400.0	14.8	-31600.0	29900.0	28000.0	-31900.0	34.2	21.1	-54.1	83.7	-0.036	2.340	0.00195
39:53.5	30400.0	15.1	-31500.0	29900.0	28000.0	-31800.0	33.7	20.2	-54.5	82.7	-0.036	2.340	0.00195
40:06.7	30300.0	15.1	-31500.0	29800.0	28000.0	-31800.0	34.3	20.5	-54.4	83.1	-0.036	2.340	0.00195
40:19.9	30300.0	15.7	-31500.0	29800.0	28000.0	-31700.0	33.5	20.8	-54.5	83.2	-0.036	2.340	0.00194
40:33.0	30300.0	13.3	-31400.0	29800.0	27900.0	-31700.0	34.0	20.3	-54.2	84.2	-0.036	2.340	0.00194
40:46.2	30200.0	13.2	-31400.0	29800.0	27900.0	-31700.0	34.2	20.0	-53.6	84.3	-0.036	2.340	0.00194

40:59.3	30200.0	12.3	-31400.0	29800.0	27900.0	-31700.0	33.7	20.2	-52.9	83.7	-0.036	2.340	0.00194
41:12.5	30200.0	12.5	-31400.0	29800.0	27900.0	-31600.0	33.0	19.8	-52.4	84.1	-0.037	2.340	0.00194
41:25.7	30200.0	12.2	-31400.0	29700.0	27900.0	-31600.0	33.7	19.7	-52.6	83.5	-0.037	2.340	0.00194
41:38.8	30200.0	12.4	-31300.0	29700.0	27900.0	-31600.0	32.8	19.4	-53.0	84.1	-0.037	2.340	0.00194
41:52.0	30000.0	13.0	-31200.0	29500.0	27700.0	-31200.0	32.6	19.5	-52.6	85.1	-0.037	2.260	0.00110
42:05.1	644.0	10.7	-2870.0	5780.0	4420.0	-899.0	258.0	3600.0	-3420.0	1450.0	-0.037	0.831	0.00016
42:18.4	470.0	11.5	-2940.0	5770.0	4410.0	-929.0	261.0	3610.0	-3420.0	1450.0	-0.037	0.828	0.00016
42:31.6	467.0	12.6	-2950.0	5770.0	4410.0	-941.0	262.0	3610.0	-3420.0	1450.0	-0.037	0.827	0.00016
42:44.7	466.0	11.7	-2960.0	5770.0	4410.0	-948.0	262.0	3610.0	-3420.0	1450.0	-0.037	0.826	0.00017
42:57.9	466.0	13.9	-2960.0	5770.0	4410.0	-953.0	261.0	3610.0	-3420.0	1450.0	-0.037	0.826	0.00017
43:11.0	468.0	11.1	-2960.0	5770.0	4410.0	-957.0	262.0	3610.0	-3420.0	1450.0	-0.037	0.825	0.00008
43:24.2	465.0	1760.0	-334.0	2730.0	1180.0	-105.0	1480.0	5400.0	-4850.0	2210.0	-0.037	0.561	-0.00001
43:37.4	466.0	2250.0	-31.9	921.0	118.0	-105.0	2250.0	6010.0	-5310.0	2530.0	-0.037	0.416	-0.00002
43:50.5	465.0	3270.0	-30.4	23.0	65.1	-104.0	3200.0	7220.0	-6840.0	4890.0	-0.037	0.173	-0.00011
44:03.8	466.0	4020.0	-30.3	22.5	64.9	-105.0	3300.0	7640.0	-7520.0	6080.0	-0.037	0.099	-0.00010
44:17.0	466.0	3970.0	-29.8	21.1	65.1	-104.0	3270.0	7610.0	-7490.0	6050.0	-0.037	0.099	-0.00010
44:30.2	467.0	3930.0	-29.2	20.4	64.4	-104.0	3250.0	7590.0	-7480.0	6040.0	-0.037	0.099	-0.00014
44:43.4	466.0	4810.0	-28.6	19.3	63.0	-104.0	3710.0	8100.0	-8010.0	6760.0	-0.025	0.031	-0.00015
44:56.5	467.0	4760.0	-27.1	19.3	63.8	-104.0	3690.0	8070.0	-7990.0	6740.0	-0.063	0.029	-0.00015
45:09.7	466.0	5580.0	-27.1	18.9	62.6	-104.0	4500.0	8890.0	-8860.0	7950.0	0.045	0.029	-0.00032
45:22.9	466.0	8800.0	-24.6	17.5	62.0	-105.0	6830.0	11000.0	-11000.0	10900.0	0.291	0.029	-0.00052
45:36.1	465.0	12200.0	-25.5	16.9	60.9	-105.0	10200.0	13700.0	-13800.0	14900.0	0.540	0.029	-0.00071
45:49.3	465.0	16000.0	-24.8	17.6	60.3	-105.0	14200.0	17000.0	-17100.0	19600.0	0.792	0.029	-0.00088
46:02.5	466.0	19700.0	-24.6	16.8	60.2	-104.0	18400.0	20300.0	-20500.0	24200.0	1.040	0.029	-0.00104
46:15.7	465.0	23200.0	-23.9	18.1	59.6	-104.0	22200.0	23400.0	-23400.0	27200.0	1.290	0.029	-0.00121
46:28.9	465.0	26100.0	-24.0	16.0	59.8	-104.0	26200.0	25800.0	-26000.0	29500.0	1.550	0.029	-0.00134
46:42.0	465.0	28200.0	-24.3	16.8	59.0	-105.0	29000.0	27800.0	-27800.0	30800.0	1.810	0.029	-0.00144
46:55.2	467.0	29900.0	-23.8	16.4	58.1	-105.0	30500.0	29000.0	-28900.0	31500.0	2.080	-0.005	-0.00157
47:08.5	466.0	30700.0	-23.7	15.9	58.9	-105.0	30900.0	29500.0	-29300.0	31600.0	2.270	-0.200	-0.00164
47:21.6	466.0	30700.0	-23.7	15.1	56.9	-105.0	31000.0	29600.0	-29300.0	31600.0	2.340	-0.278	-0.00163

47:34.8	466.0	30500.0	-23.4	14.9	57.3	-105.0	30800.0	29500.0	-29200.0	31400.0	2.350	-0.286	-0.00162
47:48.0	465.0	30400.0	-23.7	15.1	56.1	-105.0	30700.0	29400.0	-29100.0	31300.0	2.350	-0.286	-0.00161
48:01.2	466.0	30300.0	-23.7	14.1	56.6	-106.0	30600.0	29300.0	-29000.0	31200.0	2.350	-0.286	-0.00161
48:14.3	466.0	30200.0	-23.8	14.2	56.3	-105.0	30500.0	29200.0	-29000.0	31100.0	2.350	-0.286	-0.00160
48:27.5	468.0	30200.0	-23.2	13.9	55.7	-106.0	30500.0	29200.0	-28900.0	31100.0	2.350	-0.286	-0.00160
48:40.6	465.0	28700.0	-22.9	13.6	55.4	-105.0	18200.0	17000.0	-15000.0	10200.0	1.150	-0.286	-0.00006
48:53.9	467.0	191.0	-22.5	14.1	55.1	-106.0	1510.0	5280.0	-4870.0	392.0	0.795	-0.286	-0.00003
49:07.1	468.0	41.6	-22.5	14.0	54.4	-106.0	1560.0	5280.0	-4880.0	402.0	0.791	-0.286	-0.00003
49:20.3	467.0	40.3	-22.6	14.7	53.6	-106.0	1570.0	5290.0	-4880.0	402.0	0.789	-0.286	-0.00004
49:33.4	465.0	42.3	-22.3	14.6	54.1	-106.0	1570.0	5290.0	-4880.0	402.0	0.788	-0.286	-0.00003
49:46.6	467.0	41.8	-22.7	13.6	53.5	-106.0	1580.0	5290.0	-4880.0	403.0	0.788	-0.286	-0.00003
49:59.7	465.0	43.1	-22.0	13.8	53.2	-106.0	1580.0	5290.0	-4880.0	395.0	0.785	-0.286	-0.00003
50:12.9	466.0	43.7	-22.0	13.7	53.1	-105.0	1580.0	5280.0	-4870.0	395.0	0.762	-0.286	-0.00003
50:26.1	466.0	44.3	-22.1	13.9	53.8	-106.0	1580.0	5280.0	-4870.0	396.0	0.762	-0.286	-0.00003
50:39.2	469.0	44.8	-21.3	13.4	53.4	-106.0	1580.0	5270.0	-4860.0	392.0	0.762	-0.286	-0.00003
50:52.4	465.0	45.1	-21.8	13.5	53.1	-106.0	1580.0	5280.0	-4870.0	395.0	0.762	-0.286	-0.00003
51:05.5	465.0	46.5	-21.4	13.4	53.2	-106.0	1580.0	5270.0	-4860.0	392.0	0.762	-0.286	-0.00003
51:18.7	465.0	47.3	-21.2	12.8	53.1	-105.0	1590.0	5280.0	-4870.0	396.0	0.762	-0.286	-0.00003
51:31.9	464.0	48.9	-21.2	13.4	52.7	-106.0	1590.0	5280.0	-4870.0	399.0	0.762	-0.286	-0.00003
51:45.0	493.0	48.8	-21.2	13.3	54.0	-105.0	1590.0	5280.0	-4870.0	402.0	0.762	-0.286	-0.00003
51:58.2	467.0	49.4	-20.3	12.2	53.4	-106.0	1590.0	5280.0	-4870.0	399.0	0.762	-0.286	-0.00003
52:11.4	504.0	48.4	-21.4	12.3	54.1	-106.0	1580.0	5280.0	-4870.0	404.0	0.762	-0.286	-0.00003
52:24.5	510.0	48.5	-20.1	12.8	53.0	-106.0	1590.0	5280.0	-4870.0	398.0	0.761	-0.286	-0.00003
52:37.7	512.0	50.3	-20.5	12.7	53.9	-104.0	1600.0	5280.0	-4860.0	394.0	0.760	-0.286	-0.00003
52:50.8	513.0	51.3	-20.0	13.3	53.6	-105.0	1600.0	5280.0	-4870.0	395.0	0.760	-0.286	-0.00003
53:04.0	513.0	49.7	-19.9	13.4	54.0	-105.0	1600.0	5280.0	-4860.0	393.0	0.760	-0.286	-0.00003
53:17.2	514.0	51.8	-19.8	13.4	52.9	-105.0	1600.0	5280.0	-4860.0	393.0	0.760	-0.286	-0.00003
53:30.3	515.0	52.3	-20.3	13.4	53.6	-105.0	1600.0	5280.0	-4860.0	392.0	0.760	-0.286	-0.00003
53:43.5	514.0	51.3	-20.2	13.3	53.2	-106.0	1630.0	5290.0	-4860.0	381.0	0.757	-0.286	-0.00001
53:56.6	1380.0	51.5	-20.0	14.3	53.6	-105.0	18.8	2610.0	-2210.0	72.2	0.539	-0.286	0.00009
54:09.8	2300.0	51.0	-22.2	1170.0	1590.0	-147.0	18.8	30.4	-52.8	73.0	0.208	-0.282	0.00012
54:23.0	2650.0	52.8	-170.0	2480.0	2890.0	-229.0	20.5	30.5	-52.5	72.3	0.189	-0.251	0.00012
54:36.2	2620.0	52.6	-165.0	2460.0	2870.0	-225.0	18.9	30.2	-53.3	71.6	0.189	-0.251	0.00011
54:49.3	3020.0	52.6	-584.0	3980.0	4480.0	-1170.0	19.3	29.1	-54.8	71.5	0.189	-0.088	0.00019
55:02.5	5120.0	53.5	-4130.0	6700.0	6550.0	-2740.0	19.5	29.1	-50.1	71.4	0.189	0.209	0.00032

55:15.8	3540.0	53.1	-4350.0	6250.0	5430.0	-784.0	19.8	27.4	-49.8	72.9	0.189	0.332	0.00021
55:29.1	3530.0	52.1	-4340.0	6240.0	5430.0	-788.0	19.0	27.6	-50.1	71.6	0.189	0.332	0.00021
55:42.2	3530.0	52.4	-4330.0	6240.0	5430.0	-788.0	18.6	27.7	-50.0	71.7	0.189	0.332	0.00021
55:55.4	5120.0	54.1	-5220.0	7150.0	6430.0	-2070.0	19.1	27.0	-49.5	72.7	0.189	0.492	0.00043
56:08.6	9000.0	53.0	-8340.0	9850.0	9120.0	-5540.0	18.1	26.8	-49.7	71.3	0.189	0.761	0.00070
56:21.8	11500.0	53.6	-10800.0	11800.0	11000.0	-7950.0	18.7	25.9	-49.1	72.0	0.189	0.875	0.00068
56:34.9	11300.0	52.4	-10700.0	11700.0	10900.0	-7870.0	18.7	27.2	-49.1	72.6	0.189	0.899	0.00082
56:48.1	15300.0	56.1	-15200.0	15600.0	14800.0	-13500.0	19.5	26.6	-49.5	71.8	0.189	1.200	0.00111
57:01.3	19800.0	55.4	-20500.0	20100.0	19300.0	-19900.0	18.7	26.9	-49.2	71.6	0.189	1.520	0.00142
57:14.5	24800.0	54.7	-26300.0	25100.0	24200.0	-26500.0	17.3	25.8	-49.2	71.7	0.189	1.870	0.00171
57:27.7	29200.0	56.2	-31000.0	29400.0	28300.0	-31800.0	17.3	26.4	-49.4	72.1	0.189	2.200	0.00191
57:40.9	32100.0	55.6	-33400.0	32100.0	30400.0	-33100.0	17.3	26.5	-48.5	71.6	0.189	2.530	0.00197
57:54.1	32900.0	55.7	-33800.0	32900.0	31000.0	-33700.0	17.5	26.6	-49.0	72.2	0.189	2.850	0.00199
58:07.3	33600.0	54.6	-34300.0	33400.0	31300.0	-34300.0	16.7	25.8	-48.5	72.1	0.189	3.200	0.00197
58:20.4	33300.0	55.5	-33600.0	32700.0	30700.0	-33600.0	16.7	25.6	-49.1	71.8	0.189	3.230	0.00195
58:33.6	33100.0	55.5	-33400.0	32500.0	30500.0	-33300.0	16.6	25.7	-48.9	72.2	0.189	3.230	0.00194
58:46.8	33000.0	55.7	-33200.0	32400.0	30400.0	-33200.0	17.1	25.9	-47.9	72.4	0.189	3.230	0.00189
58:59.9	30000.0	55.2	-30400.0	29500.0	27100.0	-28000.0	16.5	25.6	-48.6	72.4	0.189	2.670	0.00004
59:13.1	772.0	54.5	-2440.0	5880.0	4620.0	-197.0	16.5	25.2	-48.1	72.1	0.189	1.450	0.00000
59:26.3	768.0	56.6	-2480.0	5890.0	4650.0	-212.0	15.7	25.1	-47.8	72.2	0.189	1.440	0.00000
59:39.5	767.0	55.1	-2490.0	5900.0	4650.0	-220.0	16.3	25.4	-48.5	72.1	0.189	1.440	0.00000
59:52.7	763.0	55.7	-2500.0	5890.0	4640.0	-212.0	16.5	24.5	-48.1	72.1	0.189	1.440	0.00000
00:05.8	762.0	56.1	-2500.0	5890.0	4640.0	-215.0	16.5	25.1	-48.4	72.0	0.189	1.440	0.00000
00:19.0	762.0	55.5	-2510.0	5890.0	4640.0	-220.0	16.4	25.1	-47.7	71.8	0.189	1.440	0.00000
00:32.1	763.0	55.3	-2510.0	5890.0	4650.0	-223.0	17.1	24.5	-48.7	72.0	0.189	1.440	0.00000
00:45.3	762.0	56.3	-2510.0	5890.0	4650.0	-225.0	16.7	24.9	-47.5	71.9	0.189	1.380	-0.00004
00:58.5	762.0	1080.0	-44.0	1810.0	144.0	-142.0	16.6	25.1	-48.0	71.6	0.189	1.050	-0.00007
01:11.7	762.0	1300.0	22.2	9.6	50.5	-142.0	43.2	183.0	-80.9	72.3	0.189	0.678	-0.00009
01:24.8	762.0	1700.0	23.4	9.7	51.1	-142.0	1620.0	3450.0	-2910.0	72.8	0.189	0.323	-0.00013
01:38.1	762.0	2480.0	23.6	8.6	51.3	-142.0	4350.0	6660.0	-7020.0	1120.0	0.189	-0.039	-0.00021
01:51.3	761.0	3220.0	24.2	7.5	49.9	-142.0	5330.0	7720.0	-8320.0	2680.0	0.189	-0.208	-0.00022
02:04.5	762.0	3150.0	24.6	6.7	49.9	-142.0	5280.0	7680.0	-8280.0	2640.0	0.144	-0.209	-0.00021
02:17.7	761.0	3100.0	24.3	6.1	49.6	-142.0	5250.0	7650.0	-8250.0	2610.0	0.141	-0.209	-0.00020
02:30.9	761.0	2850.0	24.5	6.7	49.5	-142.0	5290.0	7770.0	-8390.0	2850.0	0.180	-0.197	-0.00029
02:44.0	761.0	6150.0	25.3	5.6	48.9	-143.0	7320.0	9690.0	-10400.0	5540.0	0.450	-0.197	-0.00057

02:57.3	762.0	10700.0	25.5	4.7	48.1	-142.0	11100.0	12900.0	-13700.0	10200.0	0.775	-0.197	-0.00084
03:10.5	761.0	15200.0	25.6	4.7	48.2	-143.0	15700.0	16600.0	-17500.0	15700.0	1.100	-0.197	-0.00109
03:23.7	761.0	19800.0	25.7	4.2	48.1	-142.0	20700.0	20700.0	-21700.0	21400.0	1.430	-0.197	-0.00130
03:36.8	763.0	24200.0	25.7	4.3	47.7	-142.0	25300.0	24400.0	-25400.0	26200.0	1.770	-0.197	-0.00148
03:50.0	761.0	28300.0	26.0	4.4	47.0	-143.0	29300.0	27600.0	-28600.0	30300.0	2.100	-0.197	-0.00163
04:03.3	761.0	31100.0	26.6	3.7	47.9	-142.0	31700.0	30100.0	-30500.0	32800.0	2.440	-0.418	-0.00174
04:16.5	760.0	32300.0	26.4	3.7	46.4	-143.0	32300.0	30900.0	-31200.0	33300.0	2.790	-0.771	-0.00184
04:29.7	762.0	32400.0	26.5	3.3	46.3	-143.0	31900.0	30600.0	-30900.0	32700.0	2.940	-0.798	-0.00183
04:42.9	761.0	32800.0	26.2	3.0	45.9	-142.0	32300.0	30900.0	-31300.0	33000.0	3.040	-0.893	-0.00189
04:56.0	761.0	32800.0	26.3	2.1	45.4	-139.0	32100.0	30800.0	-31200.0	32900.0	3.110	-0.957	-0.00185
05:09.2	760.0	32500.0	27.1	1.0	45.7	-140.0	31800.0	30600.0	-30900.0	32600.0	3.110	-0.958	-0.00185
05:22.3	761.0	32400.0	27.0	1.4	44.5	-140.0	32300.0	31100.0	-31600.0	33600.0	3.170	-1.010	-0.00191
05:35.5	763.0	33000.0	26.7	1.7	44.9	-140.0	32300.0	31000.0	-31300.0	33100.0	3.190	-1.040	-0.00189
05:48.7	759.0	32800.0	28.0	1.0	44.9	-139.0	32000.0	30700.0	-31100.0	32800.0	3.190	-1.040	-0.00189
06:01.8	761.0	32600.0	26.9	1.3	45.0	-139.0	31800.0	30600.0	-31000.0	32600.0	3.190	-1.040	-0.00122
06:15.0	761.0	20400.0	26.7	0.8	44.5	-140.0	24300.0	24400.0	-25100.0	25200.0	2.700	-1.040	-0.00121
06:28.2	761.0	8970.0	27.0	0.6	43.3	-140.0	6020.0	8600.0	-7920.0	2520.0	1.580	-1.040	-0.00015
06:41.4	759.0	286.0	27.0	0.4	43.5	-140.0	1540.0	5200.0	-4940.0	210.0	1.390	-1.040	-0.00012
06:54.6	761.0	285.0	26.9	0.5	43.2	-141.0	1580.0	5220.0	-4960.0	216.0	1.390	-1.040	-0.00012
07:07.8	760.0	287.0	26.5	0.9	42.3	-141.0	1590.0	5220.0	-4970.0	217.0	1.390	-1.040	-0.00012
07:20.9	761.0	288.0	27.6	0.6	43.0	-141.0	1600.0	5230.0	-4970.0	217.0	1.380	-1.040	-0.00012
07:34.1	760.0	289.0	27.0	0.5	42.3	-141.0	1610.0	5230.0	-4980.0	218.0	1.380	-1.040	-0.00012
07:47.2	761.0	290.0	27.1	0.4	42.0	-141.0	1610.0	5230.0	-4980.0	216.0	1.380	-1.040	-0.00012
08:00.4	759.0	288.0	26.8	0.6	41.6	-142.0	1610.0	5230.0	-4980.0	217.0	1.380	-1.040	-0.00012
08:13.6	759.0	288.0	27.0	1.0	41.4	-141.0	1620.0	5230.0	-4980.0	217.0	1.380	-1.040	-0.00012
08:26.7	760.0	289.0	27.2	0.5	41.9	-142.0	1620.0	5230.0	-4990.0	218.0	1.380	-1.040	-0.00011
08:39.9	760.0	289.0	27.9	0.5	41.7	-141.0	1630.0	5230.0	-4990.0	217.0	1.380	-1.040	-0.00012
08:53.1	760.0	289.0	27.8	1.2	41.5	-142.0	1630.0	5230.0	-4990.0	217.0	1.380	-1.040	-0.00012
09:06.2	760.0	290.0	27.4	0.3	40.8	-142.0	1630.0	5240.0	-4990.0	218.0	1.380	-1.040	-0.00012

22:55.7	755.0	295.0	29.2	1.9	37.2	-143.0	1990.0	5080.0	-4390.0	58.9	1.170	-1.040	-0.00009
23:08.8	757.0	295.0	29.4	2.2	37.1	-143.0	1990.0	5080.0	-3500.0	60.1	1.050	-1.040	-0.00004
23:22.0	1480.0	297.0	29.5	1.6	37.3	-143.0	410.0	3040.0	-1650.0	60.0	1.010	-1.040	-0.00004
23:35.2	1910.0	295.0	30.2	2.0	38.0	-143.0	95.6	1690.0	-197.0	59.8	0.931	-1.000	-0.00002
23:48.4	1980.0	297.0	29.7	2.2	37.9	-143.0	111.0	1770.0	-237.0	60.2	0.930	-0.985	0.00000
24:01.5	2190.0	297.0	29.8	1.5	37.3	-143.0	7.3	26.7	-49.7	60.2	0.930	-0.594	0.00000
24:14.7	2210.0	294.0	30.7	1.9	37.3	-143.0	7.1	25.6	-48.7	60.7	0.930	-0.195	0.00000
24:27.9	2530.0	295.0	-107.0	1790.0	127.0	-144.0	7.3	26.7	-49.0	61.0	0.930	0.204	0.00007
24:41.2	4130.0	296.0	-3310.0	6640.0	4770.0	-143.0	7.6	26.1	-49.7	61.5	0.930	0.563	0.00022
24:54.4	6600.0	297.0	-5190.0	8770.0	7370.0	-1010.0	6.7	26.5	-48.3	60.6	0.930	0.826	0.00041
25:07.6	10300.0	296.0	-8950.0	12000.0	10700.0	-5270.0	7.0	25.7	-48.6	60.8	0.930	1.130	0.00070
25:20.8	14900.0	295.0	-14100.0	16200.0	14700.0	-10700.0	6.5	25.0	-48.2	60.8	0.930	1.430	0.00102
25:34.0	19400.0	296.0	-18900.0	20100.0	18500.0	-16300.0	6.6	25.2	-48.8	60.5	0.930	1.750	0.00133
25:47.2	23700.0	297.0	-23600.0	24100.0	22400.0	-21900.0	6.6	25.1	-48.5	61.1	0.930	2.070	0.00160
26:00.4	27600.0	296.0	-27900.0	27700.0	26100.0	-27200.0	5.5	25.5	-47.7	61.2	0.930	2.380	0.00174
26:13.5	29900.0	295.0	-30400.0	29900.0	28100.0	-30200.0	5.2	24.9	-47.7	60.7	0.930	2.630	0.00188
26:26.7	32600.0	297.0	-33200.0	32400.0	30500.0	-33600.0	5.3	24.8	-47.2	60.8	0.930	2.960	0.00196
26:39.9	33300.0	294.0	-33700.0	32900.0	30900.0	-34000.0	4.8	24.1	-48.4	61.2	0.930	3.100	0.00195
26:53.1	33400.0	295.0	-33800.0	32900.0	31000.0	-34200.0	5.4	24.9	-47.1	61.1	0.930	3.140	0.00192
27:06.2	33200.0	296.0	-33600.0	32700.0	30800.0	-33900.0	4.7	24.7	-47.4	61.0	0.930	3.140	0.00192
27:19.4	33100.0	298.0	-33400.0	32600.0	30700.0	-33800.0	4.7	24.9	-47.7	61.1	0.930	3.140	0.00191
27:32.5	33000.0	296.0	-33400.0	32600.0	30600.0	-33700.0	4.5	25.1	-47.7	61.1	0.930	3.140	0.00191
27:45.7	33000.0	297.0	-33300.0	32500.0	30600.0	-33700.0	5.1	24.1	-46.7	62.1	0.930	3.140	0.00191
27:58.9	32900.0	297.0	-33200.0	32500.0	30500.0	-33600.0	4.4	24.4	-47.3	61.3	0.930	3.140	0.00191
28:12.0	32900.0	298.0	-33200.0	32500.0	30500.0	-33600.0	4.8	24.3	-47.8	62.0	0.930	3.140	0.00164
28:25.2	12600.0	295.0	-13300.0	13700.0	10100.0	-3400.0	3.2	24.0	-47.3	61.6	0.930	1.370	-0.00003
28:38.4	755.0	298.0	-2110.0	5390.0	3930.0	-151.0	3.8	23.9	-48.0	61.4	0.930	1.370	-0.00003
28:51.6	755.0	297.0	-2150.0	5400.0	3940.0	-148.0	3.9	24.1	-47.9	61.2	0.930	1.360	-0.00003
29:04.8	754.0	297.0	-2160.0	5400.0	3950.0	-148.0	3.7	23.2	-47.9	61.7	0.930	1.360	-0.00003
29:17.9	753.0	297.0	-2180.0	5400.0	3950.0	-145.0	4.0	23.7	-46.6	61.5	0.930	1.360	-0.00003
29:31.1	754.0	298.0	-2190.0	5410.0	3950.0	-145.0	4.8	23.2	-47.1	61.4	0.930	1.360	-0.00003
29:44.2	754.0	688.0	-1240.0	4200.0	2500.0	-144.0	4.3	23.7	-47.1	61.9	0.930	1.210	-0.00009
29:57.4	754.0	1410.0	29.4	468.0	64.7	-144.0	4.5	23.4	-47.7	62.1	0.930	0.867	-0.00010
30:10.6	754.0	1410.0	32.6	2.4	65.8	-144.0	4.8	23.6	-47.1	62.0	0.930	0.491	-0.00010

30:23.8	753.0	1400.0	33.1	1.4	66.7	-145.0	4.4	23.3	-47.4	61.8	0.930	0.119	-0.00010
30:37.0	754.0	1740.0	33.5	-0.2	66.2	-145.0	36.2	917.0	-89.1	61.8	0.930	-0.255	-0.00014
30:50.2	754.0	3240.0	34.5	-1.9	64.9	-145.0	1620.0	5680.0	-5260.0	81.5	0.930	-0.602	-0.00029
31:03.5	754.0	6600.0	33.7	-3.0	66.1	-146.0	4430.0	8640.0	-8800.0	2680.0	0.930	-0.893	-0.00051
31:16.7	754.0	8530.0	34.9	-2.9	65.8	-145.0	5990.0	9760.0	-9950.0	4270.0	0.960	-1.010	-0.00051
31:29.8	752.0	8440.0	34.7	-3.4	65.1	-145.0	5950.0	9730.0	-9920.0	4240.0	0.958	-1.030	-0.00051
31:43.0	753.0	9740.0	35.1	-4.0	64.3	-146.0	7190.0	10700.0	-11000.0	5690.0	1.030	-1.030	-0.00066
31:56.2	754.0	12700.0	34.9	-4.3	64.1	-144.0	11100.0	13900.0	-14500.0	10700.0	1.330	-1.030	-0.00093
32:09.4	753.0	17100.0	35.2	-6.0	63.3	-145.0	15600.0	17500.0	-18400.0	16000.0	1.660	-1.030	-0.00117
32:22.6	752.0	21300.0	35.3	-5.5	62.6	-145.0	20500.0	21400.0	-22300.0	21400.0	1.990	-1.030	-0.00137
32:35.7	752.0	25100.0	35.8	-6.3	62.8	-144.0	24700.0	24700.0	-25700.0	26000.0	2.320	-1.030	-0.00152
32:48.9	753.0	28600.0	35.7	-6.7	62.8	-143.0	28200.0	27600.0	-28700.0	29800.0	2.650	-1.030	-0.00165
33:02.1	753.0	31400.0	36.6	-7.4	61.5	-143.0	31000.0	29900.0	-31000.0	32600.0	2.980	-1.030	-0.00180
33:15.3	752.0	32600.0	36.4	-7.7	62.1	-144.0	32200.0	30800.0	-31600.0	33300.0	3.170	-1.190	-0.00184
33:28.5	754.0	32400.0	36.5	-7.9	60.9	-144.0	32000.0	30700.0	-31500.0	33100.0	3.200	-1.220	-0.00182
33:41.7	753.0	32100.0	36.1	-8.0	60.6	-144.0	31800.0	30500.0	-31300.0	32900.0	3.200	-1.220	-0.00139
33:54.8	752.0	14000.0	36.7	-8.2	59.5	-144.0	16800.0	16000.0	-14600.0	8050.0	1.850	-1.220	-0.00013
34:08.2	753.0	320.0	37.7	-7.9	59.1	-143.0	1140.0	4670.0	-4270.0	91.3	1.450	-1.220	-0.00011
34:21.4	753.0	319.0	36.6	-8.9	59.0	-143.0	1180.0	4680.0	-4290.0	81.4	1.450	-1.220	-0.00011
34:34.5	752.0	319.0	37.0	-8.7	58.7	-143.0	1190.0	4690.0	-4300.0	75.8	1.450	-1.220	-0.00011
34:47.7	754.0	322.0	37.0	-8.6	58.5	-143.0	1200.0	4690.0	-4310.0	72.0	1.450	-1.220	-0.00011
35:00.8	753.0	321.0	37.2	-8.9	57.4	-144.0	1210.0	4690.0	-4310.0	69.6	1.450	-1.220	-0.00010
35:14.0	752.0	322.0	37.3	-9.4	57.5	-143.0	1210.0	4690.0	-4320.0	67.6	1.450	-1.220	-0.00010
35:27.2	752.0	322.0	37.3	-9.0	57.5	-144.0	1220.0	4690.0	-4320.0	66.6	1.440	-1.220	-0.00010
35:40.3	753.0	321.0	36.8	-9.2	57.8	-144.0	1220.0	4700.0	-4320.0	65.6	1.440	-1.220	-0.00010
35:53.6	752.0	324.0	37.5	-8.7	57.3	-145.0	1220.0	4700.0	-4320.0	64.1	1.440	-1.220	-0.00010
36:06.7	753.0	322.0	37.5	-8.9	56.9	-145.0	1220.0	4700.0	-4320.0	63.0	1.420	-1.220	-0.00009
36:19.9	752.0	323.0	38.1	-9.3	56.7	-145.0	640.0	4180.0	-3750.0	61.9	1.420	-1.220	-0.00009
36:33.1	753.0	323.0	38.0	-9.5	56.6	-145.0	647.0	4190.0	-3760.0	61.1	1.420	-1.220	-0.00009
36:46.2	753.0	323.0	37.5	-10.3	56.5	-145.0	663.0	4190.0	-3760.0	61.0	1.430	-1.220	-0.00009
36:59.4	751.0	324.0	37.8	-9.0	55.8	-145.0	667.0	4190.0	-3760.0	60.2	1.430	-1.220	-0.00009
37:12.5	753.0	324.0	38.1	-9.5	56.3	-144.0	672.0	4200.0	-3760.0	59.6	1.430	-1.220	-0.00009

37:25.7	751.0	324.0	37.4	-9.7	56.7	-143.0	675.0	4200.0	-3770.0	59.5	1.430	-1.220	-0.00009
37:38.9	752.0	324.0	38.5	-9.4	55.7	-144.0	677.0	4200.0	-3770.0	59.1	1.430	-1.220	-0.00010
37:52.0	751.0	324.0	38.3	-9.7	55.3	-145.0	680.0	4200.0	-3770.0	58.9	1.430	-1.220	-0.00009
38:05.2	751.0	326.0	38.4	-9.9	56.0	-144.0	682.0	4200.0	-3770.0	60.0	1.430	-1.220	-0.00009
38:18.4	752.0	324.0	37.9	-9.2	54.5	-145.0	683.0	4200.0	-3770.0	59.5	1.430	-1.220	-0.00009
38:31.5	751.0	325.0	38.3	-9.4	55.6	-144.0	673.0	4200.0	-3780.0	59.7	1.430	-1.220	-0.00009
38:44.7	752.0	324.0	38.0	-9.9	54.5	-145.0	678.0	4210.0	-3780.0	58.8	1.430	-1.220	-0.00009
38:57.8	750.0	324.0	38.4	-10.5	55.0	-145.0	678.0	4210.0	-3780.0	58.9	1.430	-1.220	-0.00009
39:11.0	751.0	324.0	38.2	-9.9	55.5	-145.0	680.0	4210.0	-3780.0	58.6	1.430	-1.220	-0.00009
39:24.2	751.0	325.0	38.4	-10.6	55.3	-144.0	682.0	4210.0	-3780.0	59.0	1.430	-1.220	-0.00009
39:37.3	751.0	325.0	38.0	-9.5	54.7	-144.0	683.0	4210.0	-3790.0	58.6	1.430	-1.220	-0.00009
39:50.5	751.0	325.0	38.0	-9.8	54.6	-144.0	20.1	2990.0	-2540.0	57.8	1.340	-1.220	-0.00002
40:03.6	1980.0	326.0	39.1	-9.9	54.5	-144.0	7.4	88.1	-121.0	58.1	1.110	-1.150	0.00000
40:16.8	1940.0	325.0	38.6	-10.2	54.1	-144.0	7.9	106.0	-138.0	58.3	1.110	-1.150	0.00000
40:30.0	1990.0	324.0	38.7	-11.3	54.4	-144.0	7.9	24.1	-48.6	58.5	1.110	-0.856	0.00000
40:43.2	2000.0	325.0	38.8	-10.7	54.3	-143.0	7.5	23.5	-49.0	58.6	1.110	-0.474	0.00000
40:56.3	2060.0	324.0	39.0	-10.1	55.3	-144.0	7.1	22.8	-48.3	58.2	1.110	-0.065	0.00002
41:09.5	2720.0	326.0	39.3	2520.0	2780.0	-212.0	6.6	23.7	-48.1	58.2	1.110	0.324	0.00011
41:22.7	4640.0	325.0	-2180.0	7080.0	6260.0	-1480.0	6.7	23.6	-48.4	58.2	1.110	0.596	0.00024
41:36.0	5920.0	325.0	-3160.0	7990.0	7150.0	-2510.0	7.4	23.9	-48.4	58.3	1.110	0.782	0.00038
41:49.2	9810.0	326.0	-6910.0	11300.0	10500.0	-7020.0	7.2	23.9	-48.2	57.8	1.110	1.130	0.00068
42:02.4	14400.0	325.0	-11700.0	15500.0	14500.0	-12300.0	7.4	23.0	-47.9	58.0	1.110	1.500	0.00101
42:15.5	19300.0	326.0	-17500.0	20200.0	19000.0	-18600.0	7.2	22.7	-48.1	59.4	1.110	1.900	0.00135
42:28.8	24400.0	326.0	-23500.0	25000.0	23700.0	-25000.0	6.7	23.7	-48.0	59.0	1.110	2.300	0.00167
42:42.0	29200.0	327.0	-28900.0	29400.0	27900.0	-30800.0	6.6	22.4	-47.7	58.1	1.110	2.700	0.00185
42:55.2	33000.0	327.0	-32900.0	32700.0	30900.0	-33300.0	6.3	22.6	-46.6	58.2	1.110	3.100	0.00170
43:08.4	29600.0	328.0	-32600.0	32300.0	30300.0	-33100.0	5.7	22.3	-47.2	58.2	1.110	3.100	0.00169
43:21.5	29600.0	327.0	-32500.0	32200.0	30300.0	-33100.0	5.7	22.4	-46.3	58.0	1.110	3.100	0.00169
43:34.7	29500.0	326.0	-32500.0	32200.0	30300.0	-33100.0	5.6	22.0	-46.7	58.2	1.110	3.100	0.00169
43:47.9	29500.0	327.0	-32500.0	32200.0	30300.0	-33000.0	5.1	22.4	-46.7	58.5	1.110	3.100	0.00169
44:01.0	29500.0	328.0	-32400.0	32200.0	30200.0	-33000.0	6.2	22.0	-46.4	58.4	1.110	3.100	0.00169
44:14.2	29500.0	327.0	-32400.0	32100.0	30200.0	-33000.0	5.7	21.2	-47.3	57.6	1.110	3.100	0.00169

44:27.3	29500.0	327.0	-32400.0	32100.0	30200.0	-33000.0	5.6	21.4	-46.8	58.6	1.110	3.100	0.00169
44:40.5	29500.0	327.0	-32400.0	32100.0	30200.0	-33000.0	5.1	21.6	-46.6	58.7	1.110	3.100	0.00169
44:53.7	28300.0	329.0	-31800.0	31800.0	29800.0	-32300.0	5.2	21.7	-46.0	58.8	1.110	3.050	0.00153
45:06.8	26300.0	328.0	-30700.0	30600.0	28100.0	-29000.0	5.6	21.8	-46.1	58.7	1.110	2.640	-0.00002
45:20.0	776.0	328.0	-2100.0	5770.0	3810.0	-138.0	3.9	21.7	-47.2	58.7	1.110	1.370	-0.00003
10:24.9	756.0	361.0	-2030.0	5410.0	3300.0	-137.0	1.2	12.0	-27.2	39.6	1.110	1.270	-0.00004
10:38.1	757.0	360.0	-2030.0	5400.0	3300.0	-135.0	1.2	12.9	-26.8	39.4	1.110	1.270	-0.00004
10:51.3	756.0	359.0	-2030.0	5410.0	3300.0	-136.0	1.2	12.4	-26.5	40.0	1.110	1.270	-0.00004
11:04.4	757.0	359.0	-2030.0	5410.0	3300.0	-136.0	1.8	12.3	-27.5	39.6	1.110	1.270	-0.00004
11:17.6	1670.0	360.0	-2500.0	5780.0	3760.0	-137.0	0.9	13.3	-26.8	39.2	1.110	1.330	0.00000
11:30.8	1650.0	359.0	-2490.0	5780.0	3750.0	-137.0	1.5	12.1	-26.9	39.7	1.110	1.330	0.00008
11:43.9	4840.0	360.0	-4660.0	7950.0	6160.0	-828.0	0.3	13.1	-26.1	39.4	1.110	1.610	0.00040
11:57.1	10300.0	359.0	-9730.0	12300.0	10700.0	-6580.0	0.6	12.3	-26.3	40.1	1.110	1.920	0.00072
12:10.3	15900.0	358.0	-16200.0	17700.0	16100.0	-14100.0	1.7	12.4	-27.0	39.8	1.110	2.250	0.00106
12:23.6	21700.0	357.0	-22900.0	23500.0	21700.0	-22000.0	1.3	12.6	-26.6	39.9	1.110	2.580	0.00141
12:36.8	27500.0	358.0	-29600.0	29400.0	27500.0	-29800.0	0.7	12.9	-26.8	39.5	1.110	2.910	0.00177
12:50.0	33100.0	357.0	-34100.0	33300.0	31300.0	-34600.0	0.7	12.4	-26.3	39.7	1.110	3.240	0.00194
13:03.1	34900.0	358.0	-35200.0	33900.0	31800.0	-35400.0	0.3	12.1	-27.2	39.1	1.110	3.590	0.00194
13:16.3	35700.0	358.0	-35700.0	34200.0	32200.0	-35800.0	0.7	12.5	-27.1	40.4	1.110	3.950	0.00191
13:29.5	35000.0	356.0	-35400.0	33700.0	31800.0	-35200.0	0.5	12.6	-27.5	39.5	1.110	4.100	0.00187
13:42.6	34700.0	357.0	-34900.0	33400.0	31500.0	-34900.0	0.9	12.1	-26.7	40.0	1.110	4.100	0.00186
13:55.8	34600.0	356.0	-34800.0	33300.0	31400.0	-34800.0	0.8	12.4	-27.1	39.6	1.110	4.100	0.00186
14:09.0	34500.0	358.0	-34700.0	33200.0	31400.0	-34600.0	0.8	11.5	-27.6	39.8	1.110	4.100	0.00186
14:22.1	34500.0	357.0	-34600.0	33200.0	31300.0	-34600.0	0.9	12.0	-26.8	39.2	1.110	4.100	0.00185
14:35.3	34400.0	358.0	-34600.0	33100.0	31200.0	-34500.0	1.1	11.8	-27.6	39.1	1.110	4.100	0.00185
14:48.5	34400.0	359.0	-34500.0	33100.0	31200.0	-34500.0	0.9	12.4	-26.8	39.6	1.110	4.100	0.00185
15:01.6	34400.0	358.0	-34500.0	33000.0	31200.0	-34400.0	0.5	12.1	-27.3	39.2	1.110	4.100	0.00185
15:14.8	34300.0	358.0	-34400.0	33000.0	31100.0	-34400.0	1.1	12.7	-26.8	39.3	1.110	4.100	0.00185
15:27.9	34300.0	358.0	-34400.0	33000.0	31100.0	-34400.0	0.6	12.6	-27.3	39.6	1.110	4.100	0.00185
15:41.1	34300.0	357.0	-34300.0	32900.0	31000.0	-34200.0	0.4	12.3	-27.3	38.8	1.110	4.080	0.00182

15:54.3	31000.0	351.0	-32200.0	31300.0	29500.0	-31300.0	0.4	12.6	-26.9	38.9	1.110	3.710	0.00059
16:07.4	1700.0	357.0	-2640.0	5680.0	4270.0	-141.0	-1.6	12.4	-27.3	39.2	1.110	2.210	-0.00019
16:20.7	849.0	357.0	-2810.0	5770.0	4350.0	-137.0	-0.9	12.4	-27.4	40.1	1.110	2.210	-0.00019
16:33.8	847.0	357.0	-2840.0	5790.0	4370.0	-135.0	-1.0	12.9	-27.9	39.0	1.110	2.210	-0.00019
16:47.0	846.0	358.0	-2850.0	5790.0	4380.0	-135.0	-1.2	12.7	-26.9	39.9	1.110	2.210	-0.00020
17:00.2	846.0	356.0	-2310.0	5190.0	3650.0	-133.0	-1.5	11.8	-27.1	40.0	1.110	2.180	-0.00019
17:13.3	845.0	357.0	-2340.0	5210.0	3680.0	-133.0	-0.5	12.6	-27.3	40.2	1.110	2.180	-0.00019
17:26.5	844.0	358.0	-2350.0	5220.0	3690.0	-134.0	-0.3	11.9	-26.1	39.3	1.110	2.180	-0.00019
17:39.6	843.0	850.0	-1090.0	3260.0	808.0	-132.0	-1.3	11.8	-26.5	39.1	1.110	1.770	-0.00026
17:52.9	843.0	358.0	61.7	-12.9	71.8	-133.0	-0.4	12.1	-26.9	39.8	1.110	1.390	-0.00020
18:06.1	843.0	357.0	62.1	-13.5	71.5	-133.0	-0.1	12.3	-27.1	40.7	1.110	1.390	-0.00020
18:19.3	843.0	357.0	62.1	-14.7	71.7	-133.0	-0.8	12.1	-26.3	39.3	1.110	1.390	-0.00022
18:32.5	845.0	1500.0	62.6	-15.8	70.3	-133.0	-0.4	12.4	-26.8	40.2	1.110	1.150	-0.00026
18:45.6	844.0	1510.0	64.0	-18.4	70.6	-133.0	-0.5	13.5	-26.4	40.7	1.110	0.761	-0.00027
18:58.8	843.0	1860.0	63.3	-19.5	68.9	-132.0	175.0	2070.0	-103.0	40.3	1.110	0.360	-0.00031
19:12.3	845.0	3250.0	65.0	-19.8	68.6	-132.0	3040.0	7780.0	-4280.0	40.2	1.110	-0.043	-0.00037
19:25.6	844.0	3990.0	65.6	-19.7	69.3	-133.0	4920.0	10500.0	-8130.0	740.0	1.110	-0.526	-0.00045
19:38.8	843.0	7180.0	64.7	-20.0	68.5	-133.0	6290.0	12500.0	-10600.0	4580.0	1.110	-0.959	-0.00078
19:51.9	844.0	10800.0	65.5	-20.6	68.9	-132.0	8010.0	14000.0	-12200.0	6770.0	1.100	-1.140	-0.00079
20:05.1	845.0	10700.0	64.7	-21.4	69.4	-133.0	7960.0	14000.0	-12200.0	6720.0	1.100	-1.140	-0.00079
20:18.3	844.0	11000.0	65.6	-21.7	68.9	-133.0	8790.0	14800.0	-13200.0	8270.0	1.220	-1.140	-0.00099
20:31.5	845.0	16000.0	66.0	-22.2	68.9	-133.0	13600.0	18800.0	-17400.0	14100.0	1.590	-1.140	-0.00127
20:44.7	845.0	21400.0	67.1	-22.2	68.2	-133.0	19400.0	23700.0	-22400.0	21000.0	2.010	-1.140	-0.00150
20:57.8	843.0	26000.0	66.7	-22.0	68.4	-133.0	24500.0	27700.0	-26800.0	27000.0	2.440	-1.140	-0.00164
21:11.0	843.0	30100.0	66.2	-22.8	67.4	-133.0	29000.0	30900.0	-30400.0	32000.0	2.870	-1.140	-0.00177
21:24.3	843.0	33200.0	66.5	-23.1	67.2	-134.0	32700.0	32000.0	-31900.0	34400.0	3.310	-1.290	-0.00190
21:37.5	843.0	34700.0	67.4	-22.9	65.7	-133.0	33500.0	32200.0	-32200.0	34800.0	3.760	-1.310	-0.00196
21:50.7	842.0	35400.0	67.4	-23.6	65.0	-133.0	34000.0	32500.0	-32500.0	35300.0	4.130	-1.310	-0.00207
22:03.9	842.0	34800.0	67.7	-23.4	64.8	-134.0	33400.0	31900.0	-31800.0	34500.0	4.220	-1.310	-0.00205
22:17.0	842.0	34500.0	68.1	-24.0	65.3	-134.0	33100.0	31700.0	-31600.0	34300.0	4.220	-1.310	-0.00204
22:30.2	843.0	34400.0	67.3	-24.5	65.0	-133.0	33000.0	31600.0	-31500.0	34100.0	4.220	-1.310	-0.00203
22:43.3	843.0	34300.0	67.7	-24.2	65.0	-134.0	32900.0	31500.0	-31400.0	34000.0	4.220	-1.310	-0.00203
22:56.5	842.0	34200.0	67.9	-24.1	64.7	-133.0	32800.0	31400.0	-31300.0	33900.0	4.220	-1.310	-0.00203

23:09.7	843.0	18100.0	68.0	-27.1	64.9	-134.0	23200.0	22800.0	-22800.0	21500.0	3.570	-1.310	-0.00059
23:22.8	844.0	2410.0	67.7	-22.4	64.6	-134.0	4270.0	6710.0	-5530.0	135.0	2.410	-1.310	-0.00017
23:36.2	842.0	584.0	67.2	-21.4	63.7	-134.0	2550.0	5270.0	-4120.0	35.4	2.050	-1.310	-0.00014
23:49.3	844.0	584.0	67.2	-22.5	63.8	-134.0	2580.0	5290.0	-4150.0	28.1	2.050	-1.310	-0.00015
24:02.5	842.0	585.0	67.7	-22.5	63.4	-134.0	2590.0	5300.0	-4170.0	23.9	2.050	-1.310	-0.00014
24:15.6	842.0	585.0	67.6	-22.7	63.3	-134.0	2600.0	5310.0	-4180.0	21.4	2.050	-1.310	-0.00014
24:28.8	843.0	587.0	67.8	-22.4	62.9	-134.0	2610.0	5310.0	-4190.0	18.9	2.050	-1.310	-0.00015
24:42.0	842.0	586.0	67.5	-22.7	63.6	-134.0	2620.0	5320.0	-4200.0	17.4	2.050	-1.310	-0.00014
24:55.1	842.0	586.0	67.6	-22.6	63.7	-134.0	2620.0	5320.0	-4200.0	16.9	2.050	-1.310	-0.00015
25:08.3	843.0	586.0	67.5	-21.9	62.8	-134.0	2620.0	5320.0	-4210.0	15.3	2.030	-1.310	-0.00015
25:21.5	841.0	587.0	67.7	-23.9	62.4	-134.0	2260.0	5010.0	-3830.0	12.5	1.990	-1.310	-0.00015
25:34.6	842.0	587.0	67.5	-24.3	61.6	-134.0	2350.0	5040.0	-3830.0	12.0	1.970	-1.310	-0.00015
25:47.8	843.0	588.0	68.1	-24.6	62.7	-134.0	2440.0	5070.0	-3850.0	11.0	1.950	-1.310	-0.00015
26:01.0	843.0	588.0	68.3	-23.8	61.9	-134.0	2710.0	5150.0	-3790.0	10.6	1.930	-1.310	-0.00015
26:14.1	840.0	588.0	68.2	-24.2	62.5	-134.0	2690.0	5150.0	-3800.0	10.1	1.930	-1.310	-0.00015
26:27.3	841.0	590.0	68.1	-24.2	63.3	-134.0	2690.0	5150.0	-3800.0	9.3	1.930	-1.310	-0.00015
26:40.5	840.0	590.0	68.3	-24.2	62.6	-135.0	2690.0	5150.0	-3800.0	9.6	1.930	-1.310	-0.00015
26:53.6	842.0	590.0	68.1	-24.2	61.8	-135.0	2690.0	5150.0	-3810.0	9.0	1.930	-1.310	-0.00015
27:06.8	841.0	592.0	68.4	-24.5	62.5	-134.0	2700.0	5150.0	-3810.0	8.3	1.930	-1.310	-0.00015
27:19.9	841.0	589.0	68.8	-23.8	61.8	-134.0	2700.0	5150.0	-3810.0	8.9	1.930	-1.310	-0.00015
27:33.1	841.0	591.0	68.3	-23.9	62.0	-135.0	2700.0	5150.0	-3820.0	7.7	1.930	-1.310	-0.00015
27:46.3	841.0	590.0	68.9	-24.3	61.8	-135.0	2700.0	5160.0	-3820.0	7.8	1.930	-1.310	-0.00015
27:59.4	841.0	589.0	68.2	-24.2	61.6	-134.0	2700.0	5160.0	-3820.0	7.9	1.930	-1.310	-0.00015
28:12.6	848.0	589.0	68.0	-24.5	61.0	-135.0	2700.0	5160.0	-3820.0	8.0	1.930	-1.310	-0.00015
28:25.8	848.0	590.0	68.5	-23.9	61.0	-135.0	2700.0	5160.0	-3820.0	8.0	1.930	-1.310	-0.00015
28:38.9	848.0	588.0	68.6	-24.5	60.7	-135.0	2690.0	5150.0	-3820.0	8.7	1.900	-1.180	-0.00015
28:52.1	847.0	589.0	68.4	-24.5	60.4	-135.0	2690.0	5150.0	-3660.0	8.0	1.860	-1.180	-0.00012
29:05.2	1190.0	589.0	68.5	-24.1	60.2	-135.0	1740.0	3980.0	-1960.0	7.7	1.800	-1.180	-0.00008
29:18.4	2140.0	587.0	67.7	-25.0	59.7	-135.0	2.7	22.7	-21.9	8.0	1.280	-1.180	-0.00007
29:31.6	2140.0	587.0	68.5	-23.6	60.0	-135.0	2.8	22.8	-22.2	7.9	0.910	-1.310	-0.00006
29:44.8	2190.0	590.0	68.6	-25.0	59.7	-135.0	2.1	23.8	-23.3	7.2	0.420	-1.310	-0.00006
29:58.0	2270.0	588.0	69.7	-24.9	59.0	-135.0	3.4	22.8	-24.3	7.8	0.265	-1.310	-0.00005
30:11.2	2400.0	589.0	70.4	-26.0	59.3	-135.0	3.5	22.5	-23.1	8.3	0.055	-1.310	-0.00005
30:24.4	2390.0	587.0	70.2	-27.0	58.7	-135.0	3.5	22.6	-23.4	8.4	0.032	-1.310	-0.00004
30:37.6	2410.0	588.0	71.6	-26.6	58.3	-135.0	1.9	22.0	-22.7	8.4	0.000	-1.310	-0.00005
30:50.7	2410.0	586.0	69.7	-26.3	58.1	-135.0	2.1	21.9	-23.6	7.7	0.000	-1.310	-0.00005
31:03.9	2400.0	588.0	70.5	-26.7	58.5	-134.0	1.9	22.1	-23.0	7.7	0.000	1.220	-0.00005
31:17.1	2390.0	589.0	70.1	-26.1	57.6	-135.0	1.9	21.6	-22.3	8.1	0.000	2.020	-0.00005

31:30.3	2390.0	588.0	70.3	-26.5	57.9	-134.0	1.8	21.9	-22.3	8.5	0.000	1.410	-0.00005
31:43.5	2380.0	588.0	70.2	-25.9	58.2	-135.0	2.2	21.6	-22.5	8.7	0.000	1.980	-0.00005
31:56.7	2380.0	589.0	70.2	-26.6	57.7	-136.0	1.0	21.3	-22.9	8.0	0.000	1.980	-0.00005
32:09.9	2380.0	589.0	70.0	-25.4	58.4	-135.0	1.2	20.9	-22.0	8.3	0.000	2.720	-0.00005
32:23.1	2370.0	589.0	70.7	-25.8	57.9	-135.0	0.7	20.6	-21.7	8.2	0.001	0.407	-0.00005
32:36.2	2370.0	589.0	70.3	-25.8	57.6	-135.0	0.8	21.3	-21.5	8.0	0.001	0.103	-0.00005
32:49.4	2370.0	588.0	70.6	-25.9	58.0	-136.0	1.0	20.6	-21.0	9.0	0.001	0.106	-0.00005
33:02.6	2360.0	588.0	70.2	-26.8	57.4	-135.0	-0.1	20.5	-20.8	8.8	0.001	0.085	-0.00005
33:15.8	2360.0	588.0	69.5	-26.2	57.2	-135.0	0.0	19.8	-21.0	8.7	0.001	0.022	-0.00005
33:28.9	2360.0	587.0	70.2	-25.8	57.5	-136.0	0.2	20.4	-21.2	9.1	0.001	-0.008	-0.00005
33:42.1	2350.0	589.0	70.2	-26.9	57.1	-136.0	0.3	20.0	-20.5	9.1	0.001	-0.009	-0.00005
33:55.2	2350.0	588.0	70.6	-25.8	57.7	-136.0	0.0	19.9	-22.0	8.9	0.001	0.006	-0.00005
34:08.4	2350.0	587.0	70.2	-26.2	57.2	-136.0	1.1	20.1	-20.8	8.3	0.001	0.024	-0.00005
34:21.6	2340.0	588.0	69.8	-25.8	57.1	-135.0	0.4	20.5	-20.5	9.2	0.001	0.024	-0.00005
34:34.7	2340.0	588.0	70.7	-26.4	56.6	-135.0	0.2	20.5	-21.0	8.5	0.001	0.011	-0.00005
34:47.9	2340.0	587.0	70.6	-26.6	57.1	-135.0	-0.1	20.1	-21.5	8.7	0.001	-0.007	-0.00004
35:01.1	2330.0	587.0	71.0	-26.5	57.1	-135.0	0.0	19.5	-20.7	9.2	0.001	0.004	-0.00005
35:14.2	2330.0	588.0	71.1	-26.6	56.5	-136.0	0.5	20.7	-20.5	8.9	0.001	0.013	-0.00005
35:27.4	2330.0	588.0	70.4	-25.9	56.9	-136.0	-0.1	20.4	-20.9	9.7	0.001	0.004	-0.00005
35:40.5	2330.0	588.0	71.9	-26.2	56.7	-136.0	-0.1	20.4	-20.4	9.4	0.001	-0.002	-0.00005
35:53.7	2330.0	589.0	70.7	-26.3	56.8	-136.0	0.5	19.4	-20.8	9.3	0.001	-0.002	-0.00004
36:06.9	2320.0	589.0	70.9	-25.5	56.9	-135.0	0.1	19.1	-21.3	9.0	-0.001	-0.002	-0.00004
36:20.0	2320.0	588.0	70.6	-26.4	56.4	-136.0	-0.3	19.9	-20.4	8.8	-0.001	-0.002	-0.00004
36:33.2	2320.0	589.0	71.3	-25.9	55.8	-136.0	0.1	19.5	-20.9	9.0	-0.001	-0.002	-0.00005
36:46.4	2320.0	589.0	70.9	-26.4	56.3	-136.0	0.6	19.6	-20.2	8.5	0.000	-0.002	-0.00004
36:59.5	2300.0	588.0	70.8	-26.5	56.4	-136.0	-0.5	19.2	-20.5	8.9	0.000	-0.002	-0.00005
37:12.7	2290.0	587.0	70.7	-26.2	55.5	-136.0	-0.9	19.4	-20.0	8.3	0.000	-0.002	-0.00004
37:25.8	2660.0	589.0	70.7	-24.6	56.1	-136.0	-0.8	20.0	-19.1	9.3	0.000	0.276	-0.00002
37:39.0	3030.0	588.0	70.1	171.0	56.3	-136.0	-1.1	19.1	-18.7	9.7	0.000	0.829	0.00004
37:52.2	4480.0	588.0	-2680.0	6850.0	5420.0	-151.0	-1.2	19.4	-19.0	9.7	0.000	1.350	0.00027
38:05.5	9750.0	586.0	-6920.0	11000.0	9840.0	-4850.0	-1.7	19.6	-19.2	9.4	0.000	1.820	0.00057
38:18.7	11100.0	588.0	-9360.0	12400.0	10700.0	-5270.0	-1.2	19.1	-18.9	9.1	0.000	1.900	0.00057
38:31.9	11000.0	587.0	-9310.0	12400.0	10700.0	-5230.0	-1.2	19.4	-18.4	9.6	0.000	1.900	0.00056
38:45.0	11000.0	587.0	-9290.0	12300.0	10700.0	-5200.0	-1.1	19.1	-19.2	9.4	0.000	1.900	0.00056
38:58.2	11000.0	588.0	-9270.0	12300.0	10700.0	-5190.0	-0.4	19.2	-19.8	9.6	0.000	1.900	0.00056
39:11.3	10900.0	588.0	-9250.0	12300.0	10700.0	-5170.0	-0.1	19.6	-19.7	9.8	0.000	1.900	0.00056
39:24.5	10900.0	587.0	-9240.0	12300.0	10700.0	-5160.0	-1.1	19.8	-19.8	9.8	0.000	1.900	0.00056
39:37.7	10900.0	587.0	-9230.0	12300.0	10700.0	-5150.0	-1.9	18.7	-18.8	9.6	0.000	1.900	0.00056
39:50.8	10900.0	588.0	-9220.0	12300.0	10700.0	-5140.0	-0.6	19.5	-19.3	10.0	0.000	1.900	0.00055
40:04.0	10800.0	588.0	-9210.0	12300.0	10600.0	-5130.0	0.1	19.3	-19.1	10.3	0.000	1.900	0.00055
40:17.2	10800.0	589.0	-9200.0	12300.0	10600.0	-5120.0	-1.1	19.6	-18.8	10.0	0.000	1.900	0.00054
40:30.3	10600.0	586.0	-9130.0	12200.0	10600.0	-5160.0	-1.6	19.8	-19.0	9.3	0.000	1.970	0.00084
40:43.5	17500.0	587.0	-16600.0	18300.0	16500.0	-13300.0	-1.6	19.5	-18.9	9.4	0.000	2.450	0.00130

40:56.7	23600.0	587.0	-23900.0	24000.0	22100.0	-21400.0	-1.4	19.5	-19.2	9.6	0.000	2.920	0.00165
41:09.9	28900.0	589.0	-30000.0	28900.0	26900.0	-28000.0	-1.6	19.2	-19.1	10.1	0.000	3.410	0.00181
41:23.1	33000.0	587.0	-34500.0	32400.0	30300.0	-32400.0	-2.4	19.2	-18.5	10.0	0.000	3.800	0.00182
41:36.3	33400.0	588.0	-34800.0	32800.0	30800.0	-33100.0	-2.4	19.7	-18.3	10.2	0.000	3.920	0.00178
41:49.5	33600.0	587.0	-34900.0	32900.0	30900.0	-33200.0	-2.7	19.2	-18.7	9.4	0.000	3.940	0.00179
42:02.7	33300.0	587.0	-34700.0	32800.0	30800.0	-33100.0	-2.6	19.3	-19.5	10.2	0.000	3.940	0.00179
42:15.8	33200.0	588.0	-34600.0	32700.0	30700.0	-33000.0	-3.1	18.7	-18.0	9.2	0.000	3.940	0.00174
42:29.0	29700.0	588.0	-32700.0	31300.0	29600.0	-31600.0	-3.0	19.6	-18.4	10.1	0.000	3.790	0.00085
42:42.1	860.0	587.0	-2790.0	5440.0	4040.0	-138.0	-2.7	18.7	-18.4	10.0	0.000	2.200	-0.00024
42:55.4	851.0	589.0	-2870.0	5470.0	4080.0	-133.0	-2.8	19.8	-17.6	10.1	0.000	2.200	-0.00025
43:08.6	848.0	587.0	-2900.0	5480.0	4090.0	-133.0	-2.3	19.1	-18.2	9.5	0.000	2.200	-0.00024
43:21.8	847.0	587.0	-2300.0	4820.0	3270.0	-133.0	-2.7	19.2	-17.9	9.9	0.000	2.170	-0.00025
43:34.9	847.0	587.0	-2310.0	4840.0	3300.0	-132.0	-2.8	19.5	-18.1	9.6	0.000	2.170	-0.00025
43:48.1	847.0	587.0	-2330.0	4850.0	3310.0	-131.0	-3.0	18.6	-18.2	9.9	0.000	2.170	-0.00025
44:01.2	847.0	587.0	-2340.0	4850.0	3320.0	-132.0	-2.1	19.8	-19.0	10.4	0.000	2.170	-0.00027
44:14.4	847.0	1120.0	-979.0	2930.0	973.0	-132.0	-2.3	19.0	-18.8	9.6	0.000	1.990	-0.00032
44:27.6	845.0	1680.0	70.7	-16.4	73.5	-132.0	-2.8	18.6	-18.2	9.4	0.000	1.520	-0.00033
44:40.9	847.0	1880.0	72.6	-20.0	74.1	-132.0	-2.2	19.0	-18.3	10.1	0.000	1.010	-0.00032
44:54.0	846.0	1870.0	73.6	-21.7	74.0	-132.0	-1.7	20.1	-18.3	10.5	0.000	0.490	-0.00033
45:07.2	845.0	2120.0	73.2	-21.9	74.8	-132.0	-2.5	19.5	-17.6	10.2	0.035	-0.027	-0.00033
45:20.5	846.0	2120.0	73.6	-22.0	74.7	-132.0	-2.5	19.7	-18.1	10.5	0.119	-0.037	-0.00033
45:33.7	846.0	2580.0	74.2	-22.9	73.7	-132.0	-3.4	20.3	-18.2	11.1	0.635	-0.037	-0.00038
45:47.0	846.0	3600.0	74.1	-24.1	73.4	-132.0	2750.0	4990.0	-2700.0	10.7	1.150	-0.037	-0.00054
46:00.1	845.0	7710.0	74.4	-26.9	72.0	-132.0	6260.0	9200.0	-8230.0	2140.0	1.590	-0.037	-0.00086
46:13.4	845.0	13700.0	75.0	-28.0	72.3	-132.0	12200.0	14300.0	-13700.0	10100.0	2.050	-0.036	-0.00116
46:26.5	845.0	17600.0	74.7	-29.1	72.1	-132.0	15700.0	16900.0	-16400.0	13700.0	2.250	-0.118	-0.00130
46:39.7	845.0	21800.0	75.9	-29.1	72.1	-132.0	21200.0	21500.0	-21400.0	20900.0	2.690	-0.565	-0.00150
46:52.9	845.0	27200.0	76.1	-28.5	71.4	-132.0	26800.0	26000.0	-26200.0	27500.0	3.150	-1.030	-0.00166
47:06.1	845.0	31600.0	75.7	-28.3	71.5	-132.0	30900.0	29400.0	-29900.0	32400.0	3.610	-1.300	-0.00189
47:19.4	844.0	33700.0	75.4	-28.4	70.8	-132.0	32500.0	30900.0	-31400.0	34000.0	3.830	-1.310	-0.00200
47:32.6	844.0	34400.0	75.7	-28.3	70.4	-133.0	33000.0	31400.0	-31900.0	34700.0	3.950	-1.310	-0.00198
47:45.8	844.0	34100.0	76.8	-28.8	69.9	-133.0	32800.0	31300.0	-31800.0	34500.0	3.950	-1.310	-0.00197
47:58.9	844.0	33900.0	76.0	-29.0	70.8	-131.0	32600.0	31200.0	-31700.0	34300.0	3.940	-1.310	-0.00185

48:12.1	843.0	14000.0	76.4	-28.7	70.1	-132.0	8710.0	10200.0	-9350.0	3080.0	2.340	-1.310	-0.00013
48:25.4	843.0	685.0	76.1	-23.2	70.7	-132.0	1320.0	4490.0	-3770.0	39.7	2.070	-1.310	-0.00009
48:38.6	845.0	684.0	75.9	-23.7	70.6	-132.0	1370.0	4520.0	-3810.0	29.7	2.060	-1.310	-0.00009
48:51.7	845.0	683.0	75.6	-24.3	69.8	-133.0	1380.0	4530.0	-3820.0	23.8	2.060	-1.310	-0.00009
49:04.9	844.0	683.0	76.1	-24.1	70.0	-133.0	1390.0	4530.0	-3830.0	20.0	2.060	-1.310	-0.00009
49:18.1	844.0	684.0	76.2	-24.6	69.9	-133.0	1400.0	4530.0	-3840.0	17.4	2.060	-1.310	-0.00009
49:31.2	843.0	683.0	76.7	-28.8	68.3	-132.0	951.0	4140.0	-3320.0	16.6	2.120	-1.310	-0.00009
49:44.4	844.0	683.0	76.0	-28.6	67.8	-133.0	967.0	4150.0	-3340.0	14.2	2.120	-1.310	-0.00009
49:57.6	844.0	684.0	76.4	-28.9	67.6	-133.0	976.0	4160.0	-3350.0	13.0	2.120	-1.310	-0.00009
50:10.7	843.0	682.0	76.3	-28.9	66.8	-133.0	982.0	4160.0	-3360.0	12.1	2.120	-1.310	-0.00009
50:23.9	1320.0	683.0	76.1	-29.8	67.2	-133.0	0.3	636.0	-186.0	11.6	1.800	-1.310	0.00000
50:37.1	2010.0	681.0	76.7	-29.7	67.0	-133.0	-1.5	21.6	-17.8	11.3	1.260	-1.310	0.00000
50:50.3	2060.0	682.0	76.1	-28.1	67.0	-133.0	-1.5	21.5	-19.2	11.8	0.640	-1.310	0.00000
51:03.4	2190.0	683.0	76.1	-30.2	67.5	-133.0	-1.0	22.0	-20.4	10.8	0.373	-1.310	0.00001
51:16.7	2340.0	682.0	76.0	-28.4	66.7	-133.0	-1.4	21.7	-19.0	10.8	0.130	-1.310	0.00002
51:29.9	2480.0	681.0	76.0	-29.3	66.8	-133.0	-2.4	21.1	-19.2	10.2	-0.031	3.850	0.00002
51:43.1	2420.0	684.0	76.5	-29.3	66.6	-133.0	-2.4	21.1	-19.0	9.1	-0.059	0.744	0.00002
51:56.3	2370.0	684.0	77.1	-29.2	66.1	-132.0	-2.6	20.2	-18.8	10.0	-0.058	0.744	0.00002
52:09.4	2300.0	684.0	76.7	-28.8	65.7	-133.0	-3.4	20.3	-18.1	10.0	-0.054	0.744	0.00002
52:22.6	2300.0	684.0	76.4	-29.3	66.2	-133.0	-3.3	19.8	-18.4	9.9	-0.054	0.744	0.00002
52:35.8	2250.0	684.0	77.2	-29.3	66.2	-133.0	-3.8	20.0	-18.4	10.0	0.012	0.744	-0.00003
52:48.9	1530.0	684.0	76.0	-29.0	65.9	-133.0	-3.4	19.3	-18.0	9.5	0.008	0.744	-0.00002
53:02.1	1700.0	683.0	76.8	-28.9	65.5	-133.0	-4.1	19.8	-18.3	9.6	-0.002	0.744	-0.00002
53:15.2	1660.0	683.0	76.8	-29.3	65.7	-133.0	-3.9	20.2	-17.9	9.8	0.000	0.744	-0.00002
53:28.4	1660.0	683.0	76.6	-30.1	65.9	-134.0	-4.2	19.6	-17.5	10.4	0.000	0.670	-0.00002
53:41.6	1660.0	681.0	76.9	-29.1	64.8	-133.0	-4.6	19.5	-17.4	10.1	-0.002	0.670	-0.00002
53:54.7	1660.0	683.0	77.7	-30.2	65.0	-133.0	-5.4	18.8	-17.1	10.8	-0.002	0.549	-0.00002
54:07.9	1660.0	684.0	77.1	-29.0	65.3	-133.0	-4.8	19.2	-17.8	9.9	-0.002	0.205	-0.00002
54:21.1	1660.0	683.0	77.2	-29.7	64.9	-134.0	-5.8	19.2	-16.6	9.4	-0.002	0.130	-0.00002
54:34.3	1660.0	683.0	77.9	-29.2	65.2	-133.0	-5.1	19.3	-17.6	10.1	-0.002	0.028	-0.00002
54:47.4	1650.0	681.0	77.0	-29.4	65.2	-134.0	-6.0	18.5	-17.0	9.5	-0.002	-0.018	-0.00002
55:00.6	1650.0	683.0	77.5	-29.7	64.5	-134.0	-5.5	19.1	-16.1	9.6	-0.002	-0.006	-0.00002
55:13.7	1650.0	681.0	76.9	-29.3	64.0	-134.0	-5.8	18.7	-16.5	9.3	-0.002	0.001	-0.00002
55:26.9	1650.0	683.0	77.0	-29.7	64.4	-134.0	-5.0	18.8	-16.8	9.1	-0.002	0.001	-0.00002
55:40.1	1650.0	683.0	77.2	-30.2	64.3	-134.0	-6.0	18.3	-16.4	9.7	-0.002	0.001	-0.00002
55:53.2	1650.0	682.0	77.7	-29.1	63.7	-134.0	-6.1	18.6	-16.1	10.0	-0.001	0.001	-0.00001
56:06.4	2550.0	682.0	77.0	-30.7	64.2	-134.0	-5.7	18.1	-15.0	9.4	-0.001	0.352	0.00004
56:19.6	3200.0	683.0	78.2	2930.0	2490.0	-181.0	-5.0	17.9	-16.3	10.2	-0.001	0.891	0.00012
56:32.8	3360.0	682.0	-2780.0	7280.0	4900.0	-287.0	-4.8	17.5	-14.5	10.0	-0.001	1.360	0.00033

56:46.0	9250.0	683.0	-7020.0	11300.0	9120.0	-5370.0	-5.2	17.7	-15.4	9.8	-0.001	1.810	0.00078
56:59.2	15100.0	685.0	-14000.0	16600.0	13500.0	-10400.0	-3.9	18.8	-15.4	8.7	-0.001	2.180	0.00092
57:12.4	14800.0	685.0	-13800.0	16400.0	13400.0	-10300.0	-4.1	18.7	-15.5	8.7	-0.001	2.180	0.00091
57:25.6	14600.0	684.0	-13700.0	16300.0	13300.0	-10200.0	-5.4	18.7	-16.0	8.6	-0.001	2.180	0.00091
57:38.8	14600.0	684.0	-13600.0	16300.0	13300.0	-10200.0	-4.4	18.9	-15.2	9.0	-0.001	2.180	0.00091
57:51.9	14500.0	684.0	-13600.0	16300.0	13300.0	-10200.0	-4.1	18.7	-15.5	9.4	-0.001	2.180	0.00090
58:05.1	15900.0	684.0	-15300.0	17900.0	14800.0	-12600.0	-4.6	18.2	-15.7	9.1	-0.001	2.370	0.00127
58:18.3	22400.0	685.0	-23100.0	24100.0	20800.0	-20700.0	-5.2	19.0	-15.7	9.3	-0.001	2.840	0.00157
58:31.5	28000.0	685.0	-29400.0	29300.0	25700.0	-27900.0	-4.9	18.6	-15.0	9.2	-0.001	3.310	0.00169
58:44.7	32500.0	685.0	-34100.0	33100.0	29500.0	-32600.0	-6.0	17.9	-16.0	9.3	-0.001	3.790	0.00169
58:57.9	35400.0	685.0	-36200.0	34800.0	32000.0	-35700.0	-7.0	18.1	-15.7	8.6	-0.062	4.240	0.00162
59:11.1	35000.0	685.0	-35800.0	34300.0	31900.0	-35700.0	-6.6	17.9	-15.8	9.0	-0.234	4.420	0.00156
59:24.2	34800.0	684.0	-35400.0	34000.0	31700.0	-35400.0	-6.0	17.7	-15.2	9.0	-0.234	4.420	0.00156
59:37.4	34700.0	684.0	-35300.0	33900.0	31600.0	-35200.0	-7.3	17.8	-15.2	9.6	-0.234	4.420	0.00155
59:50.6	34600.0	685.0	-35200.0	33800.0	31500.0	-35100.0	-6.8	18.2	-15.5	9.2	-0.234	4.420	0.00155
00:03.7	34500.0	683.0	-35100.0	33800.0	31500.0	-35100.0	-7.3	18.4	-15.3	8.9	-0.234	4.420	0.00155
00:16.9	34500.0	683.0	-35000.0	33700.0	31400.0	-35000.0	-7.3	17.9	-14.9	9.5	-1.410	4.420	0.00155
00:30.0	34500.0	684.0	-35000.0	33700.0	31400.0	-35000.0	-7.5	18.9	-15.0	9.1	-1.410	4.420	0.00155
00:43.2	34400.0	682.0	-35000.0	33700.0	31300.0	-35000.0	-7.2	19.0	-15.6	9.7	-1.410	4.420	0.00155
00:56.4	34400.0	681.0	-34900.0	33600.0	31300.0	-34900.0	-7.2	18.9	-15.7	10.7	-1.410	4.420	0.00155
01:09.5	34400.0	683.0	-34900.0	33600.0	31300.0	-34900.0	-6.6	18.4	-15.5	10.7	-1.410	4.420	0.00155
01:22.7	34400.0	682.0	-34900.0	33600.0	31300.0	-34900.0	-7.0	18.6	-15.2	9.8	-1.410	4.420	0.00155
01:35.8	34400.0	682.0	-34800.0	33600.0	31300.0	-34800.0	-6.6	17.9	-14.6	9.7	-1.410	4.420	0.00155
01:49.0	34300.0	683.0	-34800.0	33500.0	31200.0	-34800.0	-6.8	17.8	-15.5	10.8	-1.410	4.420	0.00155
02:02.2	34300.0	681.0	-34800.0	33500.0	31200.0	-34800.0	-6.9	17.6	-16.0	10.3	-1.410	4.420	0.00155

02:15.3	34300.0	681.0	-34800.0	33500.0	31200.0	-34800.0	-7.5	18.0	-15.2	11.5	-1.410	4.420	0.00155
02:28.5	34300.0	681.0	-34800.0	33500.0	31200.0	-34800.0	-7.9	17.4	-15.2	11.2	-1.410	4.420	0.00155
02:41.6	34300.0	682.0	-34700.0	33500.0	31200.0	-34800.0	-7.6	18.1	-15.2	10.2	-1.410	4.420	0.00155
02:54.8	34300.0	681.0	-34700.0	33500.0	31200.0	-34800.0	-7.7	18.5	-14.8	10.7	-1.410	4.420	0.00155
03:08.0	34300.0	681.0	-34700.0	33500.0	31200.0	-34700.0	-7.8	17.9	-15.3	10.3	-1.410	4.420	0.00156
03:21.1	36200.0	682.0	-36800.0	35000.0	32500.0	-36200.0	-7.7	17.4	-14.7	10.4	-1.410	4.620	0.00157
03:34.3	35300.0	683.0	-36000.0	34500.0	32000.0	-35700.0	-6.9	17.5	-15.2	11.1	-1.410	4.620	0.00156
03:47.5	35200.0	683.0	-35800.0	34300.0	31800.0	-35500.0	-7.3	18.3	-14.7	10.7	-1.410	4.620	0.00156
04:00.6	35100.0	681.0	-35600.0	34200.0	31700.0	-35400.0	-7.7	18.4	-15.7	11.3	-1.410	4.610	0.00150
04:13.8	33400.0	682.0	-34800.0	33600.0	31200.0	-34700.0	-6.6	18.3	-15.1	10.8	-1.410	4.540	0.00129
04:26.9	25900.0	681.0	-28900.0	28400.0	25700.0	-26000.0	-7.4	18.4	-15.2	10.5	-1.410	3.750	-0.00063
04:40.1	918.0	682.0	-2010.0	5790.0	4680.0	-347.0	-8.0	18.2	-15.2	10.6	-1.410	2.700	-0.00062
04:53.3	910.0	682.0	-2060.0	5810.0	4700.0	-371.0	-7.6	17.5	-14.6	10.9	-1.410	2.700	-0.00062
05:06.5	910.0	680.0	-2080.0	5820.0	4710.0	-383.0	-8.2	18.5	-14.6	10.3	-1.410	2.700	-0.00062
05:19.7	909.0	682.0	-2100.0	5830.0	4720.0	-391.0	-8.7	18.1	-15.0	11.1	-1.410	2.700	-0.00062
05:32.8	909.0	682.0	-2110.0	5830.0	4710.0	-385.0	-7.3	18.7	-15.7	10.4	-1.410	2.670	-0.00063
05:46.0	908.0	683.0	-1480.0	5150.0	3950.0	-154.0	-7.2	17.7	-14.8	10.6	-1.410	2.670	-0.00063
05:59.2	908.0	682.0	-1500.0	5160.0	3970.0	-156.0	-8.2	18.1	-14.8	11.2	-1.410	2.670	-0.00062
06:12.3	906.0	681.0	-1510.0	5170.0	3980.0	-157.0	-7.6	17.6	-14.6	11.2	-1.410	2.670	-0.00062
06:25.5	907.0	682.0	-1520.0	5170.0	3980.0	-155.0	-7.4	18.3	-14.1	11.1	-1.410	2.670	-0.00063
06:38.6	907.0	681.0	-1530.0	5180.0	3990.0	-156.0	-6.8	18.2	-15.0	10.9	-1.410	2.670	-0.00063
06:51.8	906.0	682.0	-1540.0	5180.0	3990.0	-156.0	-6.9	18.3	-14.4	10.5	-1.410	2.670	-0.00063
07:05.0	907.0	683.0	-1540.0	5190.0	4000.0	-158.0	-7.0	17.9	-14.3	10.4	-1.410	2.670	-0.00062
07:18.1	906.0	684.0	-1550.0	5190.0	4000.0	-157.0	-6.7	18.1	-15.6	11.0	-1.410	2.670	-0.00063
07:31.3	905.0	683.0	-1520.0	5170.0	3980.0	-152.0	-6.8	17.5	-15.0	10.4	-1.410	2.670	-0.00063
07:44.4	906.0	683.0	-1520.0	5170.0	3990.0	-152.0	-7.1	17.6	-14.7	10.7	-1.410	2.670	-0.00063
07:57.6	906.0	682.0	-1530.0	5170.0	3990.0	-152.0	-7.2	18.7	-15.6	10.5	-1.410	2.670	-0.00063
08:10.8	905.0	682.0	-1530.0	5170.0	3990.0	-153.0	-6.8	18.1	-14.6	10.3	-1.410	2.670	-0.00063
08:23.9	906.0	682.0	-1550.0	5180.0	3990.0	-153.0	-7.7	18.5	-15.1	10.7	-1.410	2.670	-0.00063
08:37.1	906.0	683.0	-1540.0	5170.0	4000.0	-153.0	-7.4	17.9	-14.7	10.6	-1.410	2.670	-0.00063
08:50.3	904.0	683.0	-1540.0	5180.0	4000.0	-154.0	-7.2	17.7	-15.4	10.1	-1.410	2.670	-0.00063
09:03.4	904.0	682.0	-1540.0	5180.0	4000.0	-153.0	-7.1	17.8	-14.4	10.7	-1.410	2.670	-0.00063

09:16.6	906.0	682.0	-1550.0	5180.0	4000.0	-155.0	-7.1	18.2	-14.5	10.5	-1.410	2.670	-0.00063
09:29.7	905.0	683.0	-1550.0	5180.0	4000.0	-154.0	-7.1	17.5	-14.3	11.2	-1.410	2.670	-0.00062
09:42.9	905.0	682.0	-1550.0	5180.0	4010.0	-155.0	-6.8	17.5	-13.8	10.9	-1.410	2.670	-0.00063
09:56.1	905.0	682.0	-1550.0	5190.0	4010.0	-156.0	-6.6	18.1	-14.4	10.2	-1.410	2.670	-0.00063
10:09.2	906.0	684.0	-1550.0	5190.0	4010.0	-155.0	-6.9	17.7	-14.5	10.6	-1.410	2.670	-0.00063
10:22.4	1130.0	684.0	-1670.0	5740.0	4810.0	-940.0	-6.5	18.3	-14.1	10.6	-1.410	2.840	-0.00007
10:35.6	15200.0	683.0	-16300.0	18300.0	17300.0	-16800.0	-7.1	18.7	-15.1	10.4	-1.410	3.740	0.00093
10:48.8	29900.0	685.0	-33200.0	32500.0	30700.0	-34500.0	-7.6	19.0	-15.2	10.0	-1.410	4.590	0.00151
11:02.0	33700.0	682.0	-35500.0	34400.0	32500.0	-36600.0	-8.4	18.3	-15.6	9.7	-1.410	4.730	0.00149
11:15.1	34100.0	684.0	-36300.0	34700.0	32300.0	-35900.0	-8.4	19.2	-14.9	10.5	-1.410	4.750	0.00148
11:28.3	33900.0	683.0	-35900.0	34400.0	32100.0	-35600.0	-8.2	19.8	-14.7	10.5	-1.410	4.750	0.00147
11:41.4	33700.0	683.0	-35800.0	34300.0	32000.0	-35600.0	-8.5	19.2	-13.3	10.0	-1.410	4.750	0.00146
11:54.6	33500.0	683.0	-35700.0	34200.0	31900.0	-35400.0	-8.4	18.7	-14.8	10.0	-1.410	4.740	0.00144
12:07.8	33300.0	682.0	-35500.0	34100.0	31800.0	-35300.0	-8.2	19.0	-14.6	9.9	-1.410	4.740	0.00143
12:20.9	33000.0	684.0	-35400.0	34000.0	31700.0	-35200.0	-8.1	19.7	-14.5	10.6	-1.410	4.730	0.00142
12:34.1	32900.0	682.0	-35300.0	34000.0	31700.0	-35100.0	-8.4	19.5	-13.9	11.1	-1.410	4.720	0.00141
12:47.3	31800.0	682.0	-34200.0	33200.0	30900.0	-34000.0	-5.8	19.0	-14.4	8.7	-1.410	4.430	-0.00006
13:00.4	1020.0	684.0	-2330.0	5940.0	4740.0	-275.0	-6.4	18.4	-15.3	8.7	-1.410	2.880	-0.00067
13:13.7	1000.0	683.0	-2410.0	5970.0	4780.0	-298.0	-6.3	18.4	-15.3	8.3	-1.410	2.880	-0.00067
13:26.8	996.0	683.0	-2440.0	5960.0	4790.0	-307.0	-6.2	18.2	-15.1	7.9	-1.410	2.880	-0.00067
13:40.0	994.0	682.0	-2450.0	5970.0	4790.0	-315.0	-6.3	17.8	-15.7	8.3	-1.410	2.880	-0.00067
13:53.1	992.0	683.0	-1700.0	5190.0	3890.0	-143.0	-5.3	18.2	-15.5	8.3	-1.410	2.850	-0.00068
14:06.3	992.0	683.0	-1750.0	5220.0	3940.0	-145.0	-4.9	18.3	-14.7	8.0	-1.410	2.850	-0.00068
14:19.5	990.0	683.0	-1770.0	5240.0	3950.0	-146.0	-5.7	17.9	-15.3	7.4	-1.410	2.850	-0.00067
14:32.6	991.0	683.0	-1780.0	5250.0	3960.0	-146.0	-5.6	17.9	-14.8	8.2	-1.410	2.850	-0.00067
14:45.8	991.0	684.0	-1790.0	5250.0	3970.0	-145.0	-6.6	17.5	-15.5	8.7	-1.410	2.850	-0.00067
14:59.0	990.0	682.0	-1800.0	5260.0	3980.0	-145.0	-5.5	18.2	-14.8	7.8	-1.410	2.850	-0.00067
15:12.1	991.0	682.0	-1810.0	5260.0	3980.0	-143.0	-5.6	17.6	-15.1	8.2	-1.410	2.850	-0.00067
15:25.3	990.0	683.0	-1810.0	5260.0	3990.0	-142.0	-5.4	17.6	-15.5	8.1	-1.410	2.850	-0.00067
15:38.4	989.0	687.0	-1810.0	5260.0	3990.0	-143.0	-5.5	17.6	-15.5	9.3	-1.410	2.790	-0.00070
15:51.6	990.0	972.0	-980.0	4280.0	2940.0	-143.0	-5.2	18.0	-16.0	8.3	-1.410	2.740	-0.00072
16:04.8	990.0	1470.0	-84.8	2760.0	1330.0	-142.0	-4.9	18.3	-14.9	7.4	-1.410	2.670	-0.00073

16:17.9	990.0	1910.0	79.6	26.8	80.0	-142.0	-5.0	18.0	-15.4	9.1	-1.410	2.250	-0.00074
16:31.2	991.0	1850.0	80.6	-30.6	80.2	-138.0	-4.6	18.1	-14.9	8.2	-1.410	1.730	-0.00074
16:44.3	991.0	1830.0	81.6	-31.9	80.6	-139.0	-4.5	18.7	-15.5	8.0	-1.410	1.630	-0.00074
16:57.5	990.0	1820.0	81.5	-31.8	80.7	-140.0	-4.8	18.4	-15.7	7.8	-1.410	1.630	-0.00074
17:10.7	990.0	1810.0	81.7	-32.3	80.9	-141.0	-5.1	18.5	-15.4	8.1	-1.410	1.630	-0.00074
17:23.8	992.0	1790.0	81.3	-31.9	80.2	-144.0	-4.4	18.3	-14.9	8.7	-1.410	1.630	-0.00074
17:37.0	990.0	1780.0	82.2	-32.3	80.1	-144.0	-4.3	17.9	-14.9	8.2	-1.410	1.630	-0.00074
17:50.1	992.0	1770.0	82.2	-32.3	80.2	-145.0	-4.1	17.6	-15.6	8.3	-1.410	1.630	-0.00074
18:03.3	990.0	1800.0	83.1	-33.3	78.9	-147.0	-4.0	18.4	-14.9	8.1	-1.370	1.430	-0.00074
18:16.5	992.0	1790.0	82.8	-33.6	78.7	-147.0	-3.8	18.2	-14.7	7.2	-1.370	1.430	-0.00074
18:29.6	991.0	1790.0	83.2	-34.3	78.7	-148.0	-3.1	18.1	-15.3	8.0	-1.330	1.350	-0.00074
18:42.8	993.0	1710.0	82.7	-36.3	77.9	-149.0	-3.0	18.4	-15.5	7.8	-1.150	1.130	-0.00074
18:56.0	993.0	1790.0	83.3	-36.0	78.1	-148.0	-3.0	18.6	-15.4	8.5	-1.150	1.130	-0.00074
19:09.1	992.0	1720.0	83.0	-37.1	77.8	-148.0	-2.8	18.5	-15.4	8.2	-1.000	0.974	-0.00074
19:22.3	991.0	1850.0	83.2	-38.8	78.2	-133.0	-3.8	18.2	-15.1	8.3	-0.704	0.676	-0.00074
19:35.4	991.0	1840.0	84.2	-40.0	77.0	-141.0	-4.0	18.5	-14.7	7.2	-0.519	0.489	-0.00074
19:48.6	991.0	1870.0	83.8	-41.1	77.0	-122.0	-4.3	18.8	-15.5	7.6	-0.519	0.489	-0.00074
20:01.8	991.0	1860.0	84.2	-41.8	77.1	-119.0	-4.0	18.2	-15.2	7.5	-0.519	0.489	-0.00074
20:15.0	993.0	1860.0	83.6	-40.2	76.1	-129.0	-3.5	18.1	-15.5	7.2	-0.519	0.489	-0.00074
20:28.1	992.0	1860.0	84.7	-37.8	75.7	-136.0	-3.9	18.6	-16.0	7.8	-0.519	0.489	-0.00074
20:41.3	994.0	1850.0	84.0	-44.6	75.3	-137.0	-3.5	17.9	-15.1	7.9	-0.519	0.489	-0.00074
20:54.5	993.0	1850.0	84.1	-40.1	75.8	-136.0	-3.8	18.4	-15.5	7.0	-0.519	0.489	-0.00074
21:07.6	993.0	1850.0	84.3	-40.2	75.2	-137.0	-3.7	18.4	-15.4	7.4	-0.538	0.489	-0.00074
21:20.8	992.0	1850.0	84.3	-39.9	75.1	-139.0	-4.1	18.5	-15.5	7.8	-0.517	0.489	-0.00074
21:33.9	993.0	1850.0	85.0	-39.9	75.2	-140.0	-3.8	19.0	-15.0	7.9	-0.493	0.489	-0.00074
21:47.1	993.0	1840.0	84.4	-40.2	74.5	-140.0	-3.4	20.0	-14.9	7.8	-0.492	0.489	-0.00074
22:00.3	994.0	1840.0	84.7	-40.6	74.5	-136.0	-3.9	19.0	-16.0	8.2	-0.484	0.489	-0.00074
22:13.4	994.0	1840.0	85.0	-40.4	74.5	-140.0	-3.7	18.4	-15.1	7.1	-0.482	0.489	-0.00074
22:26.6	994.0	1840.0	85.1	-40.8	74.0	-136.0	-3.9	18.5	-15.4	7.7	-0.482	0.488	-0.00074
22:39.7	994.0	1840.0	84.5	-39.3	73.9	-142.0	-4.1	18.8	-15.1	7.2	-0.485	0.488	-0.00074
22:52.9	994.0	1830.0	85.2	-40.7	73.6	-138.0	-4.1	18.6	-14.6	7.3	-0.488	0.488	-0.00074
23:06.1	994.0	1830.0	84.8	-47.7	73.0	-121.0	-3.2	18.7	-14.4	8.7	-0.409	0.488	-0.00075
23:19.2	995.0	2100.0	84.6	-38.0	72.9	-145.0	148.0	476.0	-219.0	8.0	0.197	0.488	-0.00080
23:32.5	994.0	2850.0	85.1	-38.8	71.0	-144.0	1720.0	5540.0	-5690.0	9.5	0.692	0.488	-0.00086
23:45.8	994.0	4080.0	86.1	-40.1	70.9	-143.0	4070.0	9120.0	-10700.0	407.0	1.300	0.488	-0.00098
23:59.0	995.0	8030.0	85.2	-41.2	70.7	-141.0	5910.0	12000.0	-14300.0	3990.0	1.760	0.488	-0.00121
24:12.2	994.0	13200.0	84.9	-46.1	71.0	-99.2	10800.0	16400.0	-18800.0	9850.0	2.110	0.488	-0.00127

24:25.4	995.0	13100.0	85.6	-42.0	70.9	-138.0	10700.0	16300.0	-18700.0	9760.0	2.110	0.488	-0.00126
24:38.6	995.0	13000.0	85.6	-42.3	71.5	-136.0	10700.0	16200.0	-18600.0	9720.0	2.110	0.488	-0.00128
24:51.7	994.0	15500.0	84.9	-43.8	70.8	-135.0	14300.0	19400.0	-22000.0	14600.0	2.420	0.488	-0.00145
25:04.9	995.0	20000.0	86.2	-43.3	69.9	-136.0	19800.0	23900.0	-26800.0	21500.0	2.860	0.488	-0.00155
25:18.1	995.0	24100.0	85.6	-43.9	69.9	-131.0	25000.0	27900.0	-30600.0	27600.0	3.310	0.488	-0.00164
25:31.3	996.0	27700.0	86.6	-43.6	71.3	-135.0	29400.0	31400.0	-32800.0	32900.0	3.770	0.488	-0.00178
25:44.6	996.0	30500.0	86.4	-42.6	72.7	-139.0	33400.0	32900.0	-33200.0	35800.0	4.240	0.061	-0.00191
25:57.8	994.0	31500.0	86.9	-42.5	72.3	-136.0	33800.0	32900.0	-33200.0	35800.0	4.610	-0.320	-0.00197
26:10.9	996.0	31400.0	85.7	-42.0	72.9	-141.0	33800.0	32800.0	-33100.0	35700.0	4.820	-0.517	-0.00193
26:24.1	995.0	31100.0	86.7	-41.5	72.7	-141.0	33400.0	32500.0	-32700.0	35300.0	4.820	-0.517	-0.00192
26:37.2	996.0	30900.0	85.9	-41.8	72.0	-141.0	33200.0	32300.0	-32500.0	35000.0	4.800	-0.517	-0.00088
26:50.4	996.0	2410.0	86.2	-39.5	72.2	-139.0	5010.0	7840.0	-7280.0	1200.0	2.990	-0.517	0.00004
27:03.7	997.0	1090.0	85.1	-39.1	71.2	-133.0	1970.0	5160.0	-4530.0	19.1	2.810	-0.517	0.00008
27:16.9	996.0	1080.0	86.6	-41.3	71.1	-123.0	2020.0	5190.0	-4590.0	16.3	2.800	-0.517	0.00008
27:30.1	997.0	1070.0	85.4	-44.5	70.7	-111.0	2040.0	5210.0	-4610.0	14.2	2.800	-0.517	0.00008
56:27.4	997.0	1060.0	88.8	-35.3	63.9	-160.0	1690.0	4850.0	-4190.0	-16.2	2.720	-0.517	0.00007
56:40.6	998.0	1060.0	89.0	-34.9	64.7	-160.0	1740.0	4870.0	-4190.0	-16.2	2.720	-0.517	0.00007
56:53.8	998.0	1060.0	88.3	-36.8	63.5	-161.0	1700.0	4850.0	-4180.0	-16.1	2.720	-0.517	0.00007
57:06.9	982.0	1060.0	88.4	-44.0	63.4	-104.0	1360.0	4560.0	-3840.0	-16.1	2.710	-0.517	0.00007
57:20.1	982.0	1060.0	88.6	-41.9	62.1	-141.0	1370.0	4570.0	-3840.0	-17.0	2.710	-0.517	0.00007
57:33.3	981.0	1060.0	88.4	-43.8	62.6	-130.0	1360.0	4560.0	-3850.0	-17.1	2.710	-0.517	0.00008
57:46.4	985.0	1060.0	88.9	-43.6	63.3	-135.0	1430.0	4590.0	-3840.0	-15.2	2.710	-0.517	0.00013
57:59.6	1650.0	1060.0	88.0	-42.9	63.7	-143.0	668.0	3790.0	-2750.0	-16.2	2.660	-0.517	0.00009
58:12.7	993.0	1060.0	88.1	-40.9	62.9	-150.0	677.0	3810.0	-2780.0	-15.7	2.660	-0.517	0.00008
58:25.9	994.0	1060.0	87.9	-42.0	63.3	-148.0	681.0	3810.0	-2780.0	-16.1	2.660	-0.517	0.00008
58:39.1	992.0	1060.0	88.7	-42.2	63.3	-147.0	683.0	3810.0	-2790.0	-16.4	2.660	-0.517	0.00017
58:52.2	2180.0	1060.0	88.9	-39.5	62.8	-147.0	17.7	19.2	-36.9	-15.8	1.970	-0.517	0.00016
59:05.4	2150.0	1060.0	88.8	-40.6	62.7	-142.0	17.7	19.6	-37.0	-16.4	1.970	-0.517	0.00016
59:18.6	2130.0	1060.0	88.0	-50.3	62.7	-132.0	18.3	19.1	-37.5	-15.3	1.970	-0.517	0.00016
59:31.7	2170.0	1060.0	88.2	-41.0	63.5	-152.0	18.0	19.2	-36.4	-15.8	1.440	-0.517	0.00017
59:44.9	2220.0	1060.0	88.2	-40.3	63.3	-139.0	17.4	19.5	-36.6	-15.6	1.440	-0.517	0.00017
59:58.1	2210.0	1060.0	88.7	-38.7	62.5	-147.0	18.0	18.7	-36.5	-15.9	1.440	-0.517	0.00016

00:11.2	2200.0	1060.0	88.7	-39.7	63.0	-139.0	17.2	18.8	-36.2	-15.6	0.950	-0.517	0.00018
00:24.4	2480.0	1060.0	87.9	-38.7	63.5	-140.0	17.4	18.2	-35.3	-15.2	0.409	-0.410	0.00020
00:37.7	2620.0	1060.0	88.1	-38.3	63.0	-139.0	16.8	18.2	-36.0	-16.2	0.402	-0.410	0.00020
00:50.8	2740.0	1060.0	88.1	-41.4	63.2	-127.0	18.0	18.7	-36.3	-14.7	0.402	-0.060	0.00022
01:04.0	2950.0	1060.0	89.9	-40.5	62.9	-131.0	17.5	17.6	-36.0	-15.4	0.402	1.050	0.00029
01:17.2	7480.0	1060.0	-3380.0	9330.0	7540.0	-4120.0	16.8	16.1	-35.0	-14.5	0.402	2.120	0.00059
01:30.4	7520.0	1060.0	-5100.0	9940.0	7110.0	-2520.0	14.3	17.1	-35.4	-15.2	0.402	2.120	0.00059
01:43.5	10300.0	1060.0	-7960.0	12500.0	9760.0	-5800.0	14.4	17.7	-35.1	-15.3	0.402	2.400	0.00102
01:56.7	16500.0	1060.0	-16100.0	18900.0	15900.0	-13800.0	16.1	17.6	-35.8	-14.9	0.402	2.860	0.00129
02:09.9	22100.0	1060.0	-23400.0	24500.0	21300.0	-21100.0	15.2	17.8	-35.3	-13.6	0.402	3.320	0.00139
02:23.1	27000.0	1060.0	-29100.0	29200.0	25900.0	-27700.0	15.2	17.5	-35.8	-14.3	0.402	3.790	0.00132
02:36.3	31000.0	1060.0	-33800.0	33000.0	29600.0	-32700.0	15.1	16.7	-34.3	-14.5	0.402	4.260	0.00124
02:49.5	33000.0	1060.0	-35700.0	34600.0	31400.0	-34900.0	15.1	16.3	-34.9	-14.1	0.402	4.500	0.00121
03:02.7	33500.0	1060.0	-36100.0	34800.0	32000.0	-35500.0	14.4	17.0	-35.2	-13.9	0.402	4.610	0.00119
03:15.8	34200.0	1060.0	-36800.0	35200.0	32500.0	-36200.0	14.4	16.9	-34.2	-14.6	0.402	4.720	0.00117
03:29.0	34100.0	1060.0	-36600.0	35100.0	32500.0	-36100.0	14.2	16.8	-34.3	-14.3	0.402	4.780	0.00115
03:42.1	33900.0	1060.0	-36300.0	34800.0	32300.0	-35900.0	14.1	17.1	-34.8	-14.0	0.402	4.780	0.00115
03:55.3	33800.0	1060.0	-36100.0	34700.0	32200.0	-35800.0	14.3	17.3	-34.7	-13.9	0.402	4.780	0.00094
04:08.5	17400.0	1060.0	-21700.0	21900.0	18600.0	-15000.0	13.8	17.0	-34.7	-13.3	1.380	3.010	-0.00075
04:22.0	1060.0	1060.0	-1860.0	5920.0	4850.0	-460.0	13.2	17.3	-34.8	-13.8	1.460	2.850	-0.00075
04:35.2	1050.0	1060.0	-1900.0	5940.0	4860.0	-483.0	13.5	17.6	-34.4	-13.9	1.460	2.850	-0.00075
04:48.3	1040.0	1060.0	-1350.0	5350.0	4190.0	-139.0	13.4	17.1	-34.3	-13.3	1.500	2.820	-0.00075
05:01.5	1040.0	1060.0	-1380.0	5370.0	4220.0	-142.0	13.0	16.6	-34.0	-12.6	1.500	2.820	-0.00075
05:14.7	1040.0	1060.0	-1400.0	5380.0	4240.0	-143.0	13.7	17.1	-33.8	-13.2	1.500	2.820	-0.00075
05:27.8	1040.0	1390.0	-919.0	4800.0	3630.0	-125.0	13.3	17.2	-35.0	-13.0	1.520	2.790	-0.00076
05:41.0	1040.0	1330.0	-977.0	4870.0	3690.0	-129.0	13.0	17.0	-34.2	-13.4	1.520	2.790	-0.00076
05:54.1	1040.0	1310.0	-1000.0	4890.0	3710.0	-130.0	13.7	16.8	-33.8	-13.1	1.520	2.790	-0.00075
06:07.3	1040.0	1250.0	-1090.0	4940.0	3760.0	-133.0	13.3	17.4	-34.4	-12.4	1.520	2.790	-0.00076
06:20.5	1040.0	1310.0	-545.0	4460.0	3440.0	-130.0	13.3	17.0	-33.7	-12.2	1.520	2.790	-0.00075
06:33.6	1040.0	1250.0	-761.0	4580.0	3440.0	-132.0	13.2	17.0	-33.9	-12.3	1.520	2.790	-0.00074
06:46.8	1040.0	1210.0	-865.0	4640.0	3460.0	-131.0	13.3	17.3	-34.4	-12.6	1.520	2.790	-0.00074
07:00.0	1040.0	1180.0	-951.0	4690.0	3470.0	-131.0	12.9	17.0	-34.4	-11.9	1.520	2.790	-0.00080
07:13.1	1040.0	2210.0	88.0	-36.1	75.3	-133.0	13.2	16.9	-33.9	-12.0	2.080	1.850	-0.00079
07:26.4	1040.0	2210.0	87.9	-43.1	78.0	-129.0	12.8	16.3	-34.0	-12.3	2.080	0.646	-0.00081
07:39.6	1040.0	2470.0	88.4	-43.4	78.1	-135.0	12.4	17.4	-33.0	-12.8	2.080	-0.518	-0.00082
07:52.8	1040.0	3190.0	89.4	-42.8	76.9	-136.0	1290.0	3780.0	-432.0	-12.4	2.080	-1.290	-0.00085
08:06.1	1040.0	3350.0	88.7	-43.6	77.4	-138.0	1250.0	3730.0	-412.0	-13.0	2.080	-1.290	-0.00084
08:19.2	1040.0	3340.0	88.2	-45.1	77.0	-139.0	1240.0	3720.0	-404.0	-12.4	2.080	-1.290	-0.00084

08:32.4	1040.0	3330.0	88.7	-44.8	76.1	-139.0	1230.0	3700.0	-397.0	-12.9	1.410	-1.290	-0.00084
08:45.6	1040.0	3300.0	89.1	-44.5	75.9	-140.0	1220.0	3690.0	-386.0	-13.3	1.410	-1.290	-0.00083
08:58.7	1040.0	3280.0	88.8	-44.3	76.4	-140.0	1210.0	3670.0	-375.0	-13.4	1.410	-1.290	-0.00083
09:11.9	1040.0	3260.0	89.7	-45.2	76.6	-140.0	1200.0	3660.0	-365.0	-13.4	1.290	-1.290	-0.00083
09:25.0	1040.0	3240.0	89.1	-45.4	76.3	-140.0	1190.0	3640.0	-354.0	-12.6	1.290	-1.290	-0.00083
09:38.2	1040.0	3230.0	89.2	-45.8	75.7	-139.0	1190.0	3630.0	-343.0	-13.3	1.290	-1.290	-0.00083
09:51.4	1040.0	3940.0	89.5	-47.9	74.1	-140.0	2510.0	6310.0	-3420.0	-12.2	1.640	-1.310	-0.00097
10:04.7	1040.0	11200.0	90.0	-47.7	73.4	-138.0	10800.0	15300.0	-14600.0	10100.0	2.640	-1.310	-0.00122
10:17.8	1040.0	19500.0	90.4	-47.8	72.7	-138.0	19900.0	22500.0	-22100.0	20000.0	3.190	-1.310	-0.00128
10:31.0	1040.0	24600.0	90.5	-48.0	72.5	-139.0	27500.0	28700.0	-29100.0	29900.0	3.950	-1.310	-0.00162
10:44.3	1040.0	29000.0	90.2	-47.7	73.2	-139.0	31500.0	31300.0	-31900.0	33600.0	4.330	-1.310	-0.00160
10:57.4	1040.0	29000.0	90.2	-48.4	72.9	-137.0	31400.0	31200.0	-31800.0	33500.0	4.340	-1.310	-0.00162
11:10.6	1040.0	30400.0	90.4	-48.1	72.6	-138.0	32800.0	32200.0	-32800.0	34900.0	4.510	-1.310	-0.00178
11:23.7	1040.0	30900.0	90.3	-47.6	72.6	-139.0	33300.0	32500.0	-33100.0	35400.0	4.650	-1.310	-0.00182
11:36.9	1040.0	31200.0	90.0	-47.6	72.5	-140.0	33600.0	32600.0	-33300.0	35700.0	4.730	-1.310	-0.00183
11:50.1	1040.0	31200.0	89.7	-48.8	73.0	-137.0	33600.0	32500.0	-33200.0	35600.0	4.750	-1.310	-0.00182
12:03.2	1040.0	31000.0	90.6	-48.5	71.4	-135.0	33400.0	32400.0	-33100.0	35400.0	4.750	-1.310	-0.00181
12:16.4	1040.0	30900.0	90.0	-48.9	71.8	-136.0	33300.0	32300.0	-33000.0	35300.0	4.750	-1.310	-0.00126
12:29.6	1040.0	2740.0	90.2	-47.3	72.4	-136.0	3250.0	6610.0	-6700.0	593.0	2.900	-1.310	0.00016
12:42.8	1040.0	1090.0	89.9	-37.5	71.3	-135.0	983.0	4860.0	-4880.0	81.0	2.790	-1.310	0.00019
12:56.0	1040.0	1080.0	89.9	-37.9	71.7	-136.0	993.0	4890.0	-4920.0	84.1	2.790	-1.310	0.00018
13:09.3	1040.0	1080.0	90.0	-38.4	70.0	-135.0	1010.0	4900.0	-4930.0	84.6	2.790	-1.310	0.00019
13:22.4	1040.0	1080.0	90.0	-38.8	70.1	-136.0	1020.0	4900.0	-4940.0	84.3	2.790	-1.310	0.00019
13:35.6	1040.0	1080.0	90.0	-39.3	70.7	-136.0	1020.0	4910.0	-4950.0	85.1	2.790	-1.310	0.00019
13:48.7	1040.0	1080.0	89.8	-38.6	69.9	-137.0	1030.0	4910.0	-4950.0	85.5	2.790	-1.310	0.00019
14:01.9	1040.0	1080.0	89.9	-38.0	69.3	-138.0	1030.0	4910.0	-4960.0	86.2	2.790	-1.310	0.00019
14:15.1	1040.0	1080.0	89.8	-40.9	70.0	-128.0	1040.0	4910.0	-4960.0	86.7	2.790	-1.310	0.00019
14:28.2	1040.0	1070.0	90.1	-40.0	69.7	-131.0	1040.0	4910.0	-4960.0	86.7	2.790	-1.310	0.00019
14:41.4	1040.0	1070.0	89.9	-40.5	69.3	-128.0	1040.0	4920.0	-4960.0	88.2	2.790	-1.310	0.00019
14:54.6	1040.0	1070.0	90.0	-41.9	69.5	-120.0	1040.0	4920.0	-4970.0	88.0	2.790	-1.310	0.00019
15:07.7	1040.0	1070.0	90.2	-45.1	69.2	-110.0	1040.0	4920.0	-4970.0	87.8	2.790	-1.310	0.00019
15:20.9	1030.0	1070.0	89.7	-41.3	69.5	-127.0	1050.0	4920.0	-4970.0	88.4	2.790	-1.310	0.00019

15:34.0	1040.0	1070.0	90.1	-49.1	69.2	-82.4	1050.0	4920.0	-4970.0	89.4	2.790	-1.310	0.00019
15:47.2	1040.0	1070.0	90.7	-41.1	69.3	-127.0	1050.0	4920.0	-4970.0	89.5	2.790	-1.310	0.00019
16:00.4	1040.0	1070.0	89.6	-42.2	68.7	-126.0	1050.0	4920.0	-4970.0	90.2	2.790	-1.310	0.00019
31:47.1	1030.0	1070.0	91.0	-36.0	65.5	-153.0	1090.0	4940.0	-5000.0	98.0	2.780	-1.310	0.00018
32:00.3	2140.0	1070.0	91.2	-39.0	65.0	-156.0	21.9	18.1	-36.1	-24.0	1.650	-1.310	0.00029
32:13.5	2710.0	1070.0	91.2	-38.5	65.2	-156.0	21.7	16.7	-35.9	-22.7	-0.202	0.094	0.00019
32:26.8	968.0	1070.0	91.5	-39.5	65.6	-155.0	21.6	17.2	-36.4	-22.2	-0.035	0.094	0.00019
32:39.9	970.0	1070.0	91.9	-40.6	65.7	-155.0	22.2	17.4	-36.3	-22.1	-0.035	0.094	0.00019
32:53.1	971.0	1070.0	92.0	-41.2	64.7	-156.0	21.8	17.1	-34.6	-22.7	-0.031	0.094	0.00019
33:06.2	970.0	1070.0	91.3	-39.4	64.9	-155.0	21.0	17.5	-35.5	-21.9	-0.026	0.094	0.00019
33:19.4	972.0	1070.0	91.6	-39.9	66.3	-155.0	21.4	16.9	-35.5	-20.8	-0.027	0.094	0.00019
33:32.6	971.0	1070.0	91.8	-40.1	65.1	-156.0	21.1	17.0	-34.6	-21.6	-0.027	0.094	0.00019
33:45.7	970.0	1070.0	92.1	-40.6	64.5	-155.0	21.4	16.4	-34.0	-21.1	-0.027	0.094	0.00030
33:58.9	2640.0	1070.0	92.0	-40.5	65.8	-155.0	21.1	16.1	-34.0	-20.3	-0.279	0.173	0.00031
34:12.0	963.0	1070.0	91.8	-41.7	65.2	-156.0	21.0	16.1	-34.5	-20.4	-0.133	0.173	0.00019
34:25.2	965.0	1070.0	91.8	-41.9	65.0	-155.0	21.6	16.1	-34.7	-20.7	-0.133	0.173	0.00019
34:38.4	967.0	1070.0	92.4	-41.6	65.6	-155.0	21.6	15.9	-34.4	-20.3	-0.131	0.173	0.00019
34:51.5	969.0	1070.0	91.3	-42.2	65.8	-155.0	20.9	16.0	-34.1	-19.5	-0.127	0.173	0.00019
35:04.7	968.0	1070.0	92.1	-43.1	65.4	-155.0	20.8	15.8	-33.4	-20.2	-0.127	0.173	0.00026
35:17.9	2470.0	1070.0	91.6	-42.1	65.9	-155.0	21.3	15.6	-33.8	-20.4	-0.289	0.182	0.00030
35:31.0	2420.0	1070.0	91.8	-43.1	65.8	-155.0	21.3	15.7	-33.6	-19.8	-0.290	0.182	0.00030
35:44.2	2400.0	1070.0	92.0	-44.1	65.3	-155.0	21.0	15.5	-33.9	-19.7	-0.290	0.182	0.00030
35:57.3	2380.0	1070.0	91.6	-43.4	65.9	-155.0	21.0	15.2	-33.2	-19.8	-0.290	0.182	0.00030
36:10.7	2370.0	1070.0	92.4	-43.6	65.0	-155.0	20.9	16.4	-33.2	-19.8	-0.287	0.182	0.00030
36:23.9	2360.0	1070.0	92.2	-43.6	66.0	-155.0	21.4	15.5	-33.3	-19.9	-0.287	0.182	0.00030
36:37.0	2360.0	1070.0	91.7	-42.7	66.3	-154.0	21.0	15.6	-32.5	-19.1	-0.287	0.182	0.00030
36:50.2	2350.0	1070.0	92.0	-43.5	65.0	-155.0	20.8	15.7	-33.3	-18.9	-0.285	0.176	0.00030
37:03.4	2350.0	1070.0	92.1	-43.8	64.9	-154.0	20.7	15.2	-33.3	-19.4	-0.285	0.176	0.00030
37:16.5	2340.0	1070.0	92.0	-44.2	65.3	-154.0	20.6	16.0	-32.3	-18.8	-0.285	0.175	0.00030
37:29.7	2350.0	1070.0	92.1	-44.5	65.8	-155.0	20.8	14.8	-33.5	-19.1	-0.285	0.521	0.00034
37:42.9	2950.0	1070.0	90.4	-45.0	538.0	-155.0	20.7	15.2	-31.9	-18.9	-0.285	1.330	0.00038
37:56.1	5010.0	1070.0	68.6	4230.0	5970.0	-483.0	20.5	15.2	-32.3	-18.8	-0.285	1.750	0.00046
38:09.3	4890.0	1070.0	75.9	4160.0	5910.0	-456.0	20.7	15.9	-33.1	-18.9	-0.285	1.750	0.00051
38:22.5	7550.0	1070.0	-1540.0	7750.0	7120.0	-287.0	19.0	15.1	-31.2	-18.0	-0.285	2.150	0.00051
38:35.7	5140.0	1070.0	-1860.0	7220.0	7110.0	-282.0	19.8	15.0	-32.4	-18.3	-0.285	2.150	0.00051
38:48.9	5130.0	1070.0	-1850.0	7210.0	7110.0	-280.0	19.6	15.0	-32.6	-18.4	-0.285	2.150	0.00051
39:02.0	5120.0	1070.0	-1840.0	7200.0	7100.0	-277.0	19.9	14.6	-31.8	-18.5	-0.285	2.150	0.00051

39:15.2	5110.0	1070.0	-1840.0	7190.0	7100.0	-275.0	19.8	15.1	-32.6	-17.1	-0.285	2.150	0.00051
39:28.3	5100.0	1070.0	-1830.0	7190.0	7100.0	-274.0	20.5	14.1	-32.2	-17.7	-0.285	2.150	0.00050
39:41.5	5090.0	1070.0	-1820.0	7180.0	7090.0	-274.0	19.5	14.6	-32.3	-17.5	-0.285	2.150	0.00050
39:54.7	5080.0	1070.0	-1820.0	7180.0	7090.0	-272.0	20.3	15.0	-32.3	-17.4	-0.285	2.150	0.00051
40:07.8	5070.0	1070.0	-1810.0	7170.0	7090.0	-271.0	20.1	15.1	-32.4	-17.4	-0.285	2.150	0.00050
40:21.0	5060.0	1070.0	-1810.0	7170.0	7080.0	-271.0	19.6	15.2	-32.2	-17.2	-0.285	2.150	0.00051
40:34.2	5050.0	1070.0	-1810.0	7160.0	7080.0	-270.0	21.0	15.6	-32.0	-17.7	-0.285	2.150	0.00050
40:47.3	5050.0	1070.0	-1800.0	7160.0	7080.0	-269.0	19.5	14.8	-32.1	-17.3	-0.285	2.150	0.00050
41:00.5	5040.0	1070.0	-1800.0	7160.0	7070.0	-269.0	20.3	14.9	-32.4	-17.2	-0.285	2.150	0.00051
41:13.6	5040.0	1070.0	-1800.0	7160.0	7080.0	-269.0	19.8	16.0	-32.2	-16.8	-0.285	2.150	0.00050
41:26.8	5030.0	1070.0	-1800.0	7150.0	7070.0	-268.0	19.0	14.9	-32.2	-15.6	-0.285	2.150	0.00050
41:40.0	5030.0	1070.0	-1800.0	7150.0	7070.0	-267.0	19.7	15.0	-32.1	-16.4	-0.285	2.150	0.00050
41:53.1	5030.0	1070.0	-1800.0	7150.0	7080.0	-268.0	19.0	15.4	-32.2	-17.3	-0.285	2.150	0.00050
42:06.3	5020.0	1070.0	-1800.0	7150.0	7070.0	-268.0	19.4	14.7	-31.7	-16.2	-0.285	2.150	0.00050
42:19.4	5020.0	1070.0	-1790.0	7150.0	7070.0	-267.0	19.0	15.1	-31.5	-17.0	-0.285	2.150	0.00050
42:32.6	5020.0	1070.0	-1790.0	7150.0	7070.0	-267.0	20.7	15.4	-31.5	-16.5	-0.285	2.150	0.00050
42:45.8	5010.0	1070.0	-1790.0	7150.0	7070.0	-266.0	20.1	15.0	-31.8	-15.7	-0.285	2.150	0.00050
42:58.9	5010.0	1070.0	-1790.0	7150.0	7070.0	-268.0	19.7	15.1	-31.6	-16.1	-0.285	2.150	0.00050
43:12.1	5000.0	1070.0	-1790.0	7150.0	7070.0	-266.0	19.9	14.7	-31.4	-15.5	-0.285	2.150	0.00050
43:25.2	5000.0	1070.0	-1790.0	7140.0	7070.0	-267.0	19.5	14.9	-31.3	-16.5	-0.285	2.150	0.00051
43:38.4	5000.0	1070.0	-1790.0	7140.0	7070.0	-265.0	19.3	14.7	-31.5	-16.3	-0.285	2.150	0.00050
43:51.6	4990.0	1070.0	-1780.0	7140.0	7070.0	-266.0	19.4	15.3	-31.3	-16.1	-0.285	2.150	0.00050
44:04.7	4990.0	1070.0	-1780.0	7140.0	7070.0	-264.0	19.2	15.3	-31.9	-16.0	-0.285	2.150	0.00050
44:17.9	4990.0	1070.0	-1780.0	7130.0	7070.0	-262.0	19.5	15.7	-32.3	-15.3	-0.285	2.150	0.00050
44:31.1	4980.0	1070.0	-1780.0	7130.0	7060.0	-262.0	19.1	14.6	-31.1	-15.8	-0.285	2.150	0.00050
44:44.2	4980.0	1070.0	-1780.0	7130.0	7060.0	-263.0	18.7	16.0	-31.3	-16.1	-0.285	2.150	0.00050
44:57.4	4980.0	1070.0	-1780.0	7130.0	7060.0	-261.0	19.5	15.3	-31.7	-16.0	-0.285	2.150	0.00050
45:10.5	4970.0	1070.0	-1770.0	7130.0	7060.0	-261.0	19.3	15.1	-31.8	-15.6	-0.285	2.150	0.00050
45:23.7	4970.0	1070.0	-1770.0	7130.0	7060.0	-260.0	19.3	15.3	-31.9	-15.7	-0.286	2.150	0.00050
45:36.9	4970.0	1070.0	-1770.0	7130.0	7060.0	-260.0	19.5	15.9	-31.7	-15.1	-0.286	2.150	0.00050
45:50.0	4960.0	1070.0	-1770.0	7130.0	7060.0	-259.0	19.8	15.3	-31.2	-15.7	-0.286	2.150	0.00050
46:03.2	4960.0	1070.0	-1770.0	7130.0	7060.0	-261.0	19.8	15.2	-30.9	-15.4	-0.285	2.150	0.00050
46:16.4	4960.0	1070.0	-1770.0	7120.0	7060.0	-260.0	20.0	14.7	-31.2	-15.1	-0.286	2.150	0.00050
46:29.5	4960.0	1070.0	-1770.0	7120.0	7060.0	-260.0	19.1	15.2	-31.8	-15.9	-0.286	2.150	0.00050
46:42.7	4950.0	1070.0	-1770.0	7120.0	7060.0	-260.0	19.9	15.2	-31.7	-15.2	-0.286	2.150	0.00050
46:55.8	4950.0	1070.0	-1770.0	7120.0	7060.0	-260.0	19.0	14.9	-30.7	-15.3	-0.286	2.150	0.00050
47:09.0	4950.0	1070.0	-1760.0	7120.0	7050.0	-259.0	20.1	15.4	-32.0	-15.3	-0.286	2.150	0.00050

47:22.2	4940.0	1070.0	-1760.0	7120.0	7050.0	-261.0	19.6	14.7	-30.7	-15.6	-0.286	2.150	0.00050
47:35.3	4940.0	1070.0	-1760.0	7120.0	7050.0	-259.0	19.2	15.3	-30.4	-15.0	-0.286	2.150	0.00050
47:48.5	4940.0	1070.0	-1760.0	7120.0	7050.0	-259.0	19.5	14.8	-31.3	-15.5	-0.286	2.150	0.00050
48:01.7	4940.0	1070.0	-1760.0	7110.0	7050.0	-259.0	19.9	15.0	-30.5	-15.5	-0.286	2.150	0.00050
48:14.8	4930.0	1070.0	-1760.0	7110.0	7050.0	-259.0	19.7	15.3	-31.0	-15.1	-0.286	2.150	0.00050
48:28.0	4930.0	1070.0	-1760.0	7110.0	7050.0	-258.0	20.2	14.9	-31.4	-15.3	-0.286	2.150	0.00050
48:41.1	4920.0	1070.0	-1750.0	7110.0	7050.0	-258.0	19.5	15.8	-31.1	-15.1	-0.286	2.150	0.00050
48:54.3	4920.0	1070.0	-1750.0	7100.0	7040.0	-256.0	19.9	15.0	-31.3	-15.1	-0.286	2.150	0.00050
49:07.5	4910.0	1070.0	-1750.0	7100.0	7040.0	-257.0	19.8	15.4	-30.9	-14.8	-0.285	2.150	0.00050
49:20.6	4900.0	1070.0	-1740.0	7100.0	7040.0	-256.0	20.4	14.9	-31.0	-15.1	-0.286	2.150	0.00050
49:33.8	4900.0	1070.0	-1740.0	7100.0	7030.0	-255.0	20.0	15.6	-30.6	-15.4	-0.286	2.150	0.00050
49:47.0	4900.0	1070.0	-1740.0	7100.0	7030.0	-255.0	19.7	15.9	-31.4	-15.2	-0.286	2.150	0.00050
50:00.1	4900.0	1070.0	-1740.0	7090.0	7040.0	-256.0	19.2	15.2	-30.7	-14.7	-0.286	2.150	0.00050
50:13.3	4900.0	1070.0	-1740.0	7090.0	7030.0	-255.0	19.8	16.1	-31.1	-15.3	-0.286	2.150	0.00049
50:26.4	4890.0	1070.0	-1740.0	7090.0	7030.0	-255.0	20.0	15.4	-31.4	-15.0	-0.286	2.140	0.00050
50:39.6	4890.0	1070.0	-1740.0	7090.0	7030.0	-255.0	19.2	15.5	-31.0	-14.8	-0.286	2.140	0.00050
50:52.8	4890.0	1070.0	-1740.0	7090.0	7030.0	-255.0	20.1	15.6	-31.0	-14.8	-0.285	2.140	0.00050
51:05.9	4890.0	1070.0	-1740.0	7090.0	7030.0	-255.0	19.7	15.0	-31.0	-14.2	-0.285	2.140	0.00050
51:19.1	4890.0	1070.0	-1740.0	7090.0	7030.0	-254.0	19.9	15.4	-31.1	-14.7	-0.285	2.140	0.00050
51:32.2	4890.0	1070.0	-1740.0	7090.0	7030.0	-255.0	19.3	16.1	-30.7	-14.4	-0.285	2.140	0.00050
51:45.4	4890.0	1070.0	-1740.0	7090.0	7030.0	-255.0	19.6	15.2	-31.1	-14.2	-0.285	2.140	0.00050
51:58.6	4880.0	1070.0	-1740.0	7090.0	7030.0	-254.0	20.0	16.0	-31.1	-13.8	-0.285	2.140	0.00050
52:11.7	4880.0	1070.0	-1740.0	7090.0	7030.0	-255.0	19.8	15.8	-30.5	-14.5	-0.285	2.140	0.00050
52:24.9	4880.0	1070.0	-1740.0	7090.0	7030.0	-255.0	19.7	15.8	-31.3	-14.5	-0.285	2.140	0.00050
52:38.0	4880.0	1070.0	-1740.0	7090.0	7030.0	-255.0	19.7	16.0	-31.0	-14.8	-0.285	2.140	0.00050
52:51.2	4880.0	1070.0	-1740.0	7090.0	7030.0	-255.0	19.9	15.3	-30.6	-14.2	-0.285	2.140	0.00050
53:04.4	4880.0	1070.0	-1740.0	7090.0	7030.0	-255.0	19.5	15.5	-30.7	-13.9	-0.285	2.140	0.00050
53:17.5	4880.0	1070.0	-1740.0	7090.0	7030.0	-255.0	19.1	15.4	-31.0	-13.4	-0.285	2.140	0.00050
53:30.8	4870.0	1070.0	-1740.0	7090.0	7030.0	-255.0	19.4	15.3	-30.9	-14.7	-0.285	2.140	0.00050
53:43.9	4870.0	1070.0	-1740.0	7090.0	7030.0	-255.0	19.6	15.1	-30.3	-14.2	-0.285	2.140	0.00050
53:57.1	4870.0	1070.0	-1730.0	7090.0	7030.0	-255.0	19.7	15.2	-31.0	-14.3	-0.285	2.140	0.00050
54:10.3	4870.0	1070.0	-1740.0	7090.0	7030.0	-255.0	20.1	15.3	-31.2	-13.6	-0.285	2.140	0.00050
54:23.4	4870.0	1070.0	-1730.0	7090.0	7030.0	-254.0	20.8	15.2	-30.9	-14.3	-0.285	2.140	0.00050
54:36.6	4870.0	1070.0	-1730.0	7090.0	7030.0	-254.0	20.8	15.6	-30.5	-13.6	-0.285	2.140	0.00050
54:49.8	4870.0	1070.0	-1730.0	7090.0	7030.0	-254.0	19.5	16.0	-30.0	-14.1	-0.285	2.140	0.00050
55:02.9	4860.0	1070.0	-1730.0	7090.0	7030.0	-254.0	20.2	15.1	-30.5	-14.2	-0.285	2.140	0.00050
55:16.1	4860.0	1070.0	-1730.0	7080.0	7030.0	-254.0	20.3	15.6	-31.1	-13.7	-0.285	2.140	0.00050

55:29.2	4860.0	1070.0	-1730.0	7080.0	7030.0	-254.0	19.8	15.6	-30.8	-14.3	-0.285	2.140	0.00050
55:42.4	4860.0	1070.0	-1730.0	7080.0	7030.0	-254.0	19.5	15.2	-30.8	-13.5	-0.285	2.140	0.00050
55:55.6	4860.0	1070.0	-1730.0	7080.0	7020.0	-253.0	20.1	15.6	-30.7	-13.8	-0.285	2.140	0.00050
56:08.7	4860.0	1070.0	-1730.0	7080.0	7020.0	-253.0	20.1	15.9	-30.8	-12.5	-0.285	2.140	0.00050
56:21.9	4850.0	1070.0	-1730.0	7080.0	7020.0	-253.0	19.2	16.0	-31.1	-13.2	-0.285	2.140	0.00050
56:35.0	4850.0	1070.0	-1730.0	7080.0	7020.0	-253.0	19.4	15.9	-30.3	-13.2	-0.285	2.140	0.00050
56:48.2	4850.0	1070.0	-1730.0	7080.0	7020.0	-253.0	19.6	15.2	-30.2	-13.4	-0.285	2.140	0.00050
57:01.4	4850.0	1070.0	-1730.0	7080.0	7020.0	-252.0	19.7	15.9	-30.0	-13.1	-0.286	2.140	0.00050
57:14.5	4850.0	1070.0	-1730.0	7080.0	7020.0	-253.0	19.5	15.6	-30.3	-12.9	-0.285	2.140	0.00050
57:27.7	4850.0	1070.0	-1730.0	7080.0	7020.0	-252.0	19.7	14.9	-30.7	-13.5	-0.285	2.140	0.00050
57:40.8	4850.0	1070.0	-1720.0	7080.0	7020.0	-252.0	19.3	16.4	-30.2	-13.2	-0.285	2.140	0.00050
57:54.0	4850.0	1070.0	-1720.0	7080.0	7020.0	-252.0	19.0	16.5	-30.3	-13.1	-0.285	2.140	0.00050
58:07.2	4840.0	1070.0	-1720.0	7080.0	7020.0	-252.0	20.1	16.0	-30.6	-13.0	-0.285	2.140	0.00050
58:20.3	4840.0	1070.0	-1720.0	7080.0	7020.0	-252.0	19.3	15.4	-30.5	-12.6	-0.285	2.140	0.00050
58:33.5	4840.0	1070.0	-1720.0	7070.0	7020.0	-253.0	19.5	16.2	-30.0	-12.7	-0.285	2.140	0.00050
58:46.7	4840.0	1070.0	-1720.0	7070.0	7020.0	-252.0	19.1	16.1	-30.7	-13.3	-0.285	2.140	0.00050
58:59.8	4840.0	1070.0	-1720.0	7070.0	7020.0	-252.0	18.9	16.0	-29.9	-13.1	-0.285	2.140	0.00050
59:13.0	4830.0	1070.0	-1720.0	7070.0	7020.0	-252.0	19.9	15.9	-30.7	-12.3	-0.285	2.140	0.00050
59:26.1	4830.0	1070.0	-1720.0	7070.0	7020.0	-252.0	19.3	16.1	-29.5	-13.2	-0.285	2.140	0.00050
59:39.3	4830.0	1070.0	-1720.0	7070.0	7020.0	-251.0	19.4	16.6	-29.9	-12.2	-0.285	2.140	0.00050
59:52.5	4830.0	1070.0	-1720.0	7070.0	7010.0	-251.0	19.9	16.0	-31.0	-12.7	-0.285	2.140	0.00050
00:05.6	4830.0	1070.0	-1720.0	7070.0	7010.0	-251.0	19.1	15.6	-30.3	-12.4	-0.285	2.140	0.00050
00:18.8	4830.0	1070.0	-1720.0	7070.0	7010.0	-251.0	19.4	16.3	-30.2	-12.5	-0.285	2.140	0.00050
00:32.0	4820.0	1070.0	-1720.0	7070.0	7010.0	-251.0	18.8	15.4	-30.5	-12.3	-0.285	2.140	0.00050
00:45.1	4820.0	1070.0	-1720.0	7070.0	7010.0	-251.0	19.1	16.5	-30.3	-13.7	-0.285	2.140	0.00050
00:58.3	4820.0	1070.0	-1710.0	7070.0	7010.0	-251.0	19.3	16.4	-29.6	-12.4	-0.285	2.140	0.00050
01:11.4	4820.0	1070.0	-1710.0	7070.0	7010.0	-251.0	18.7	16.3	-30.0	-12.4	-0.285	2.140	0.00050
01:24.6	4820.0	1070.0	-1710.0	7070.0	7010.0	-250.0	18.6	16.6	-30.2	-13.0	-0.285	2.140	0.00050
01:37.8	4820.0	1070.0	-1710.0	7070.0	7010.0	-250.0	20.0	16.0	-31.0	-12.7	-0.285	2.140	0.00050
01:50.9	4820.0	1070.0	-1710.0	7060.0	7010.0	-251.0	19.8	16.4	-30.5	-12.3	-0.285	2.140	0.00050
02:04.1	4810.0	1070.0	-1710.0	7060.0	7010.0	-250.0	18.8	16.1	-30.8	-13.4	-0.285	2.140	0.00050
02:17.2	4810.0	1070.0	-1710.0	7060.0	7010.0	-250.0	19.8	16.8	-30.4	-12.7	-0.285	2.140	0.00049
02:30.4	4810.0	1070.0	-1710.0	7060.0	7010.0	-250.0	19.5	17.1	-30.3	-12.9	-0.285	2.140	0.00050
02:43.6	4810.0	1070.0	-1710.0	7060.0	7010.0	-250.0	19.4	16.2	-30.2	-12.5	-0.285	2.140	0.00049
02:56.7	4810.0	1070.0	-1710.0	7060.0	7000.0	-250.0	19.0	16.8	-29.8	-12.4	-0.285	2.140	0.00049
03:09.9	4810.0	1070.0	-1710.0	7060.0	7000.0	-250.0	18.9	16.1	-29.9	-12.2	-0.285	2.140	0.00049
03:23.0	4810.0	1070.0	-1710.0	7060.0	7000.0	-250.0	19.2	15.3	-30.6	-12.6	-0.285	2.140	0.00049

03:36.2	4800.0	1070.0	-1710.0	7060.0	7000.0	-250.0	19.6	16.2	-30.0	-12.2	-0.285	2.140	0.00049
03:49.4	4800.0	1070.0	-1710.0	7060.0	7000.0	-249.0	18.3	15.9	-30.3	-12.2	-0.285	2.140	0.00049
04:02.5	4800.0	1070.0	-1710.0	7060.0	7000.0	-249.0	19.4	15.7	-29.4	-12.7	-0.285	2.140	0.00050
04:15.7	4800.0	1070.0	-1710.0	7060.0	7000.0	-249.0	18.6	15.8	-29.7	-12.7	-0.285	2.140	0.00049
04:28.9	4800.0	1070.0	-1700.0	7060.0	7000.0	-249.0	19.1	16.1	-29.9	-12.9	-0.285	2.140	0.00050
04:42.0	4800.0	1070.0	-1700.0	7060.0	7000.0	-249.0	18.8	15.6	-30.2	-12.3	-0.285	2.140	0.00049
04:55.2	4800.0	1070.0	-1700.0	7060.0	7000.0	-249.0	18.9	16.1	-30.0	-12.2	-0.285	2.140	0.00049
05:08.3	4800.0	1070.0	-1700.0	7060.0	7000.0	-248.0	19.3	16.0	-30.7	-12.4	-0.285	2.140	0.00049
05:21.5	4790.0	1070.0	-1700.0	7060.0	7000.0	-248.0	19.0	16.4	-29.7	-12.0	-0.285	2.140	0.00049
05:34.7	4790.0	1070.0	-1700.0	7050.0	7000.0	-248.0	18.8	16.5	-30.0	-11.5	-0.285	2.140	0.00049
05:47.8	4790.0	1070.0	-1700.0	7050.0	7000.0	-248.0	19.3	17.0	-30.0	-11.7	-0.285	2.140	0.00049
06:01.0	4790.0	1070.0	-1700.0	7050.0	7000.0	-248.0	19.0	16.9	-29.9	-11.8	-0.285	2.140	0.00049
06:14.1	4790.0	1070.0	-1700.0	7050.0	7000.0	-248.0	19.2	16.6	-29.7	-11.6	-0.285	2.140	0.00049
06:27.3	4790.0	1070.0	-1700.0	7050.0	7000.0	-248.0	20.0	16.6	-29.6	-12.3	-0.285	2.140	0.00049
06:40.5	4780.0	1070.0	-1700.0	7050.0	6990.0	-247.0	19.4	16.0	-29.8	-11.7	-0.285	2.140	0.00049
06:53.6	4780.0	1070.0	-1700.0	7050.0	6990.0	-248.0	19.4	15.8	-29.3	-11.6	-0.285	2.140	0.00049
07:06.8	4780.0	1070.0	-1700.0	7050.0	6990.0	-247.0	19.4	16.5	-29.8	-12.1	-0.285	2.140	0.00049
07:20.0	4780.0	1070.0	-1700.0	7050.0	6990.0	-247.0	20.7	16.8	-29.7	-12.0	-0.285	2.140	0.00049
07:33.1	4780.0	1070.0	-1700.0	7050.0	6990.0	-248.0	19.5	16.3	-28.7	-12.4	-0.285	2.140	0.00049
07:46.3	4780.0	1070.0	-1690.0	7050.0	6990.0	-247.0	19.3	16.7	-30.1	-12.2	-0.285	2.140	0.00049
07:59.4	4780.0	1070.0	-1690.0	7050.0	6990.0	-247.0	19.2	17.1	-30.3	-12.6	-0.285	2.140	0.00049
08:12.6	4780.0	1070.0	-1690.0	7050.0	6990.0	-247.0	19.0	17.4	-29.0	-12.2	-0.285	2.140	0.00049
08:25.8	4770.0	1070.0	-1690.0	7050.0	6990.0	-247.0	19.3	16.2	-29.7	-11.7	-0.285	2.140	0.00049
08:38.9	4770.0	1070.0	-1690.0	7050.0	6990.0	-246.0	19.7	16.4	-29.7	-12.8	-0.285	2.140	0.00049
08:52.1	4770.0	1070.0	-1690.0	7050.0	6990.0	-246.0	20.0	17.4	-30.3	-11.9	-0.285	2.140	0.00049
09:05.2	4770.0	1070.0	-1690.0	7040.0	6990.0	-247.0	19.6	16.8	-28.9	-12.2	-0.285	2.140	0.00049
09:18.4	4770.0	1070.0	-1690.0	7040.0	6990.0	-246.0	19.9	16.6	-30.5	-12.0	-0.285	2.140	0.00049
09:31.6	4770.0	1070.0	-1690.0	7040.0	6990.0	-246.0	19.6	16.7	-30.1	-11.4	-0.285	2.140	0.00049
09:44.7	4770.0	1070.0	-1690.0	7040.0	6990.0	-246.0	19.5	16.5	-29.3	-11.4	-0.285	2.140	0.00049
09:57.9	4770.0	1070.0	-1690.0	7040.0	6990.0	-246.0	19.5	16.8	-30.2	-12.6	-0.285	2.140	0.00049
10:11.1	4760.0	1070.0	-1690.0	7040.0	6990.0	-246.0	19.8	16.5	-29.9	-12.5	-0.285	2.140	0.00049
10:24.2	4760.0	1070.0	-1690.0	7040.0	6990.0	-246.0	19.8	16.8	-29.4	-12.3	-0.285	2.140	0.00049
10:37.4	4830.0	1070.0	-1690.0	7070.0	7040.0	-279.0	19.9	16.5	-29.5	-11.5	-0.285	2.140	0.00050
10:50.5	4860.0	1070.0	-1700.0	7070.0	7050.0	-274.0	19.7	15.7	-28.9	-12.1	-0.285	2.140	0.00050
11:03.7	4860.0	1070.0	-1690.0	7070.0	7050.0	-274.0	19.4	17.1	-29.7	-11.9	-0.285	2.140	0.00050
11:16.9	4860.0	1070.0	-1690.0	7070.0	7050.0	-273.0	19.6	16.5	-29.9	-12.2	-0.285	2.140	0.00050
11:30.0	4860.0	1070.0	-1690.0	7070.0	7050.0	-272.0	19.7	16.5	-29.4	-11.7	-0.285	2.140	0.00050

11:43.2	4860.0	1070.0	-1690.0	7070.0	7040.0	-272.0	19.5	15.7	-30.5	-11.7	-0.285	2.140	0.00050
11:56.3	4860.0	1070.0	-1690.0	7070.0	7040.0	-272.0	19.8	16.6	-29.5	-13.2	-0.285	2.140	0.00050
12:09.5	6180.0	1070.0	-2440.0	7830.0	7890.0	-970.0	19.7	16.5	-28.8	-12.4	-0.285	2.260	0.00081
12:22.7	12200.0	1070.0	-9630.0	14000.0	13700.0	-8430.0	20.1	16.3	-29.3	-12.3	-0.285	2.710	0.00104
12:35.8	17800.0	1070.0	-17500.0	20300.0	19600.0	-16700.0	19.7	17.2	-29.1	-12.2	-0.285	3.160	0.00116
12:49.1	23600.0	1070.0	-24600.0	26000.0	25000.0	-24600.0	19.2	17.7	-28.9	-11.6	-0.285	3.600	0.00114
13:02.3	24100.0	1070.0	-25100.0	26400.0	25200.0	-24600.0	18.9	16.9	-28.7	-11.5	-0.285	3.600	0.00114
13:15.4	24000.0	1070.0	-25000.0	26400.0	25200.0	-24500.0	18.3	17.5	-28.6	-12.0	-0.285	3.600	0.00114
13:28.6	23900.0	1070.0	-25000.0	26300.0	25200.0	-24500.0	18.7	16.9	-28.3	-11.2	-0.285	3.600	0.00113
13:41.8	23900.0	1070.0	-25000.0	26300.0	25100.0	-24400.0	19.5	16.9	-28.7	-11.8	-0.285	3.600	0.00113
13:54.9	23900.0	1070.0	-24900.0	26300.0	25100.0	-24400.0	19.1	17.3	-28.2	-12.2	-0.285	3.600	0.00113
14:08.1	23800.0	1070.0	-24900.0	26300.0	25100.0	-24400.0	19.0	17.1	-28.6	-11.9	-0.285	3.600	0.00113
14:21.2	23800.0	1070.0	-24900.0	26300.0	25100.0	-24400.0	19.1	16.6	-28.0	-12.2	-0.285	3.600	0.00113
14:34.4	23800.0	1070.0	-24900.0	26300.0	25100.0	-24400.0	19.4	16.9	-28.7	-11.9	-0.285	3.600	0.00113
14:47.6	23800.0	1070.0	-24900.0	26300.0	25100.0	-24400.0	19.1	16.9	-28.9	-12.2	-0.285	3.600	0.00113
15:00.7	23800.0	1070.0	-24900.0	26300.0	25100.0	-24400.0	19.1	16.7	-28.1	-12.2	-0.285	3.600	0.00112
15:13.9	6880.0	1070.0	-5820.0	8910.0	6850.0	-158.0	19.9	16.7	-29.3	-12.0	-0.285	2.240	-0.00033
15:27.2	1120.0	1070.0	-1220.0	5930.0	5260.0	-149.0	19.6	17.4	-29.2	-11.9	-0.285	2.240	-0.00033
15:40.3	1120.0	1070.0	-1230.0	5930.0	5270.0	-148.0	19.0	16.9	-29.0	-12.3	-0.285	2.240	-0.00033
15:53.5	1080.0	1070.0	-1240.0	5940.0	5270.0	-148.0	19.0	16.5	-29.8	-11.9	-0.285	2.240	-0.00033
16:06.7	953.0	1070.0	-1240.0	5940.0	5270.0	-148.0	19.1	16.8	-30.2	-11.4	-0.285	2.240	-0.00033
16:19.8	984.0	1070.0	-1240.0	5940.0	5280.0	-148.0	19.0	16.9	-30.2	-11.6	-0.285	2.240	-0.00033
16:33.0	980.0	1070.0	-1250.0	5940.0	5280.0	-147.0	18.8	17.1	-29.4	-11.3	-0.285	2.240	-0.00033
16:46.2	979.0	1070.0	-1250.0	5940.0	5280.0	-147.0	19.3	17.0	-29.5	-12.3	-0.285	2.240	-0.00033
16:59.3	980.0	1070.0	-1250.0	5940.0	5280.0	-147.0	18.6	17.4	-29.6	-12.1	-0.285	2.240	-0.00033
17:12.5	980.0	1070.0	-1250.0	5940.0	5280.0	-146.0	18.7	17.3	-29.3	-11.6	-0.285	2.240	-0.00033
17:25.6	982.0	1070.0	-1270.0	5940.0	5230.0	-146.0	19.3	16.9	-29.2	-11.8	-0.285	2.230	-0.00033
17:38.8	982.0	1070.0	-1270.0	5940.0	5240.0	-147.0	19.3	17.0	-28.8	-10.6	-0.285	2.230	-0.00033
17:52.0	982.0	1070.0	-1270.0	5940.0	5240.0	-146.0	18.8	16.8	-29.6	-11.6	-0.285	2.230	-0.00033
18:05.1	1090.0	1070.0	-1320.0	5990.0	5310.0	-152.0	18.5	17.1	-29.0	-12.2	-0.285	2.280	-0.00021
18:18.3	2900.0	1070.0	-2170.0	6930.0	6690.0	-654.0	18.3	17.2	-29.2	-11.1	-0.285	2.350	-0.00021

18:31.4	5390.0	1070.0	-4090.0	9030.0	9090.0	-3610.0	19.0	16.9	-29.0	-11.7	-0.285	2.700	0.00063
18:44.7	20600.0	1070.0	-19300.0	21600.0	20900.0	-19000.0	19.0	17.6	-28.6	-11.0	-0.285	3.300	0.00106
18:57.9	25600.0	1070.0	-24100.0	25800.0	24900.0	-24900.0	18.5	17.7	-28.6	-10.8	-0.285	3.650	0.00115
19:11.1	28500.0	1070.0	-27700.0	28700.0	27700.0	-28500.0	18.5	17.7	-28.1	-11.5	-0.285	3.820	0.00112
19:24.3	28300.0	1070.0	-27600.0	28600.0	27600.0	-28400.0	18.9	17.6	-28.4	-11.2	-0.285	3.820	0.00111
19:37.4	28200.0	1070.0	-27600.0	28600.0	27600.0	-28300.0	18.6	17.2	-28.4	-11.5	-0.285	3.820	0.00111
19:50.6	28200.0	1070.0	-27500.0	28600.0	27500.0	-28300.0	18.5	16.8	-28.6	-11.3	-0.285	3.820	0.00111
20:03.7	28100.0	1070.0	-27500.0	28600.0	27500.0	-28300.0	19.2	17.3	-28.4	-11.4	-0.285	3.820	0.00111
20:16.9	28100.0	1070.0	-27500.0	28500.0	27500.0	-28300.0	19.0	17.6	-29.1	-11.3	-0.285	3.820	0.00111
20:30.1	28900.0	1070.0	-28600.0	29400.0	28600.0	-29900.0	19.1	17.4	-29.8	-12.1	-0.285	3.990	0.00111
20:43.2	33500.0	1070.0	-33700.0	33300.0	32000.0	-34600.0	19.3	17.8	-30.2	-11.3	-0.285	4.470	0.00098
20:56.4	36600.0	1070.0	-37400.0	35700.0	33100.0	-36700.0	18.1	17.4	-29.1	-11.1	-0.285	4.930	0.00084
21:09.6	37400.0	1070.0	-38000.0	35800.0	33300.0	-36900.0	18.6	16.8	-27.9	-12.2	-0.285	5.230	0.00067
21:22.7	37800.0	1070.0	-38200.0	35900.0	33400.0	-36900.0	18.0	17.2	-27.5	-11.7	-0.285	5.260	0.00059
21:35.9	36800.0	1070.0	-37000.0	35100.0	32600.0	-36200.0	19.0	16.3	-28.6	-11.8	-0.285	5.260	0.00059
21:49.0	36700.0	1070.0	-36700.0	35000.0	32400.0	-36000.0	18.8	16.2	-28.5	-11.8	-0.285	5.260	0.00058
22:02.2	36500.0	1070.0	-36600.0	34900.0	32300.0	-35900.0	18.5	17.2	-28.1	-12.4	-0.285	5.260	0.00057
22:15.4	36300.0	1070.0	-36400.0	34800.0	32200.0	-35800.0	19.0	17.0	-27.9	-11.6	-0.285	5.260	0.00053
22:28.5	26000.0	1070.0	-29300.0	29100.0	26000.0	-26200.0	17.7	17.2	-27.7	-12.1	-0.285	4.570	-0.00072
22:41.7	967.0	1070.0	-2590.0	6460.0	4780.0	-221.0	17.6	17.3	-28.3	-12.4	-0.285	3.520	-0.00072

APPENDIX F

FINITE ELEMENT ANALYSIS MODEL DATA

The information shown below is the pertinent data collected from the finite element analysis model used within this report.

Finite Element Analysis Model Results

Step Number	Applied Load	Beam End Displacement	Short Rod Axial Load	Long Rod Axial Load
	Kip	*in*	*Kip*	*Kip*
0	0.00	0.00	14.00	14.00
0.01	0.09	0.00	14.01	14.01
0.02	0.22	-0.01	14.03	14.03
0.03	0.32	-0.01	14.04	14.04
0.04	0.43	-0.01	14.06	14.05
0.05	0.54	-0.01	14.07	14.07
0.06	0.65	-0.02	14.08	14.08
0.07	0.76	-0.02	14.10	14.10
0.08	0.86	-0.02	14.11	14.11
0.09	0.97	-0.02	14.13	14.12
0.1	1.08	-0.03	14.14	14.14
0.11	1.19	-0.03	14.16	14.15
0.12	1.30	-0.03	14.17	14.16
0.13	1.40	-0.04	14.18	14.18
0.14	1.51	-0.04	14.20	14.19
0.15	1.62	-0.04	14.21	14.20
0.16	1.73	-0.04	14.23	14.22
0.17	1.84	-0.05	14.24	14.23
0.18	1.94	-0.05	14.26	14.24
0.19	2.05	-0.05	14.27	14.26
0.2	2.16	-0.05	14.28	14.27
0.21	2.27	-0.06	14.30	14.29
0.22	2.38	-0.06	14.31	14.30
0.23	2.48	-0.06	14.33	14.31
0.24	2.59	-0.06	14.34	14.33
0.25	2.70	-0.07	14.35	14.34
0.26	2.81	-0.07	14.37	14.35
0.27	2.92	-0.07	14.38	14.37
0.28	3.02	-0.08	14.40	14.38
0.29	3.13	-0.08	14.41	14.39
0.3	3.24	-0.08	14.43	14.41
0.31	3.35	-0.08	14.44	14.42
0.32	3.46	-0.09	14.45	14.43
0.33	3.56	-0.09	14.47	14.45
0.34	3.67	-0.09	14.48	14.46
0.35	3.78	-0.09	14.50	14.48
0.36	3.89	-0.10	14.51	14.49

Finite Element Analysis Model Results

Step Number	Applied Load	Beam End Displacement	Short Rod Axial Load	Long Rod Axial Load
	Kip	*in*	*Kip*	*Kip*
37	22.70	-0.72	23.52	27.49
37.01	22.45	-0.70	23.26	27.10
37.02	21.74	-0.68	22.77	26.36
37.03	21.32	-0.66	22.44	25.85
37.04	20.91	-0.65	22.10	25.35
37.05	20.42	-0.63	21.73	24.79
37.06	19.97	-0.61	21.38	24.26
37.07	19.53	-0.59	21.04	23.74
37.08	19.07	-0.57	20.69	23.21
37.09	18.61	-0.55	20.34	22.68
37.1	18.16	-0.54	19.99	22.16
37.11	17.71	-0.52	19.64	21.63
37.12	17.25	-0.50	19.29	21.11
37.13	16.80	-0.48	18.96	20.59
37.14	16.34	-0.47	18.62	20.09
37.15	15.89	-0.45	18.28	19.58
37.16	15.44	-0.43	17.95	19.07
37.17	14.98	-0.41	17.61	18.57
37.18	14.53	-0.40	17.30	18.10
37.19	14.07	-0.38	16.99	17.63
37.2	13.62	-0.36	16.68	17.17
37.21	13.16	-0.34	16.40	16.75
37.22	12.71	-0.33	16.13	16.35
37.23	12.26	-0.31	15.89	16.00
37.24	11.80	-0.30	15.69	15.70
37.25	11.35	-0.28	15.53	15.48
37.26	10.89	-0.27	15.44	15.38
37.27	10.44	-0.26	15.38	15.32
37.28	9.99	-0.25	15.32	15.26
37.29	9.53	-0.24	15.26	15.20
37.3	9.08	-0.23	15.20	15.14
37.31	8.63	-0.22	15.14	15.08
37.32	8.17	-0.20	15.08	15.03
37.33	7.72	-0.19	15.02	14.97
37.34	7.26	-0.18	14.96	14.91
37.35	6.81	-0.17	14.90	14.86
37.36	6.36	-0.16	14.84	14.80

0.37	4.00	-0.10	14.53	14.50	37.37	5.90	-0.15	14.78	14.74
0.38	4.10	-0.10	14.54	14.52	37.38	5.45	-0.14	14.72	14.68
0.39	4.21	-0.11	14.55	14.53	37.39	4.99	-0.12	14.66	14.63
0.4	4.32	-0.11	14.57	14.54	37.4	4.54	-0.11	14.60	14.57
0.41	4.43	-0.11	14.58	14.56	37.41	4.09	-0.10	14.54	14.51
0.42	4.54	-0.11	14.60	14.57	37.42	3.63	-0.09	14.48	14.46
0.43	4.64	-0.12	14.61	14.58	37.43	3.18	-0.08	14.42	14.40
0.44	4.75	-0.12	14.63	14.60	37.44	2.72	-0.07	14.36	14.34
0.45	4.86	-0.12	14.64	14.61	37.45	2.27	-0.06	14.30	14.29
0.46	4.97	-0.12	14.65	14.62	37.46	1.82	-0.05	14.24	14.23
0.47	5.08	-0.13	14.67	14.64	37.47	1.36	-0.03	14.18	14.17
0.48	5.18	-0.13	14.68	14.65	37.48	0.91	-0.02	14.12	14.11
0.49	5.29	-0.13	14.70	14.67	37.49	0.45	-0.01	14.06	14.06
0.5	5.40	-0.13	14.71	14.68	37.5	0.00	0.00	14.00	14.00
0.51	5.51	-0.14	14.72	14.69	37.51	-0.45	0.01	13.94	13.94
0.52	5.62	-0.14	14.74	14.71	37.52	-0.91	0.02	13.88	13.89
0.53	5.72	-0.14	14.75	14.72	37.53	-1.36	0.03	13.82	13.83
0.54	5.83	-0.15	14.77	14.73	37.54	-1.82	0.05	13.76	13.77
0.55	5.94	-0.15	14.78	14.75	37.55	-2.27	0.06	13.70	13.72
0.56	6.05	-0.15	14.80	14.76	37.56	-2.72	0.07	13.64	13.66
0.57	6.16	-0.15	14.81	14.77	37.57	-3.18	0.08	13.58	13.60
0.58	6.26	-0.16	14.82	14.79	37.58	-3.63	0.09	13.52	13.54
0.59	6.37	-0.16	14.84	14.80	37.59	-4.09	0.10	13.46	13.49
0.6	6.48	-0.16	14.85	14.81	37.6	-4.54	0.11	13.40	13.43
0.61	6.59	-0.16	14.87	14.83	37.61	-4.99	0.12	13.34	13.37
0.62	6.70	-0.17	14.88	14.84	37.62	-5.45	0.14	13.28	13.32
0.63	6.80	-0.17	14.90	14.86	37.63	-5.90	0.15	13.22	13.26
0.64	6.91	-0.17	14.91	14.87	37.64	-6.36	0.16	13.16	13.20
0.65	7.02	-0.18	14.92	14.88	37.65	-6.81	0.17	13.10	13.15
0.66	7.13	-0.18	14.94	14.90	37.66	-7.26	0.18	13.04	13.09
0.67	7.24	-0.18	14.95	14.91	37.67	-7.72	0.19	12.98	13.03
0.68	7.34	-0.18	14.97	14.92	37.68	-8.17	0.20	12.92	12.97
0.69	7.45	-0.19	14.98	14.94	37.69	-8.63	0.22	12.86	12.92
0.7	7.56	-0.19	15.00	14.95	37.7	-9.08	0.23	12.80	12.86
0.71	7.67	-0.19	15.01	14.96	37.71	-9.53	0.24	12.74	12.80
0.72	7.78	-0.19	15.02	14.98	37.72	-9.99	0.25	12.68	12.75
0.73	7.88	-0.20	15.04	14.99	37.73	-10.44	0.26	12.62	12.69
0.74	7.99	-0.20	15.05	15.00	37.74	-10.90	0.27	12.56	12.63
0.75	8.10	-0.20	15.07	15.02	37.75	-11.35	0.28	12.50	12.57
0.76	8.21	-0.21	15.08	15.03	37.76	-11.80	0.30	12.43	12.49
0.77	8.32	-0.21	15.09	15.05	37.77	-12.26	0.31	12.35	12.40
0.78	8.42	-0.21	15.11	15.06	37.78	-12.71	0.33	12.26	12.31
0.79	8.53	-0.21	15.12	15.07	37.79	-13.16	0.34	12.18	12.21
0.8	8.64	-0.22	15.14	15.09	37.8	-13.62	0.36	12.09	12.11
0.81	8.75	-0.22	15.15	15.10	37.81	-14.07	0.38	12.00	12.01
0.82	8.86	-0.22	15.17	15.11	37.82	-14.53	0.40	11.91	11.90
0.83	8.96	-0.22	15.18	15.13	37.83	-14.98	0.41	11.83	11.80
0.84	9.07	-0.23	15.19	15.14	37.84	-15.44	0.43	11.74	11.69
0.85	9.18	-0.23	15.21	15.15	37.85	-15.89	0.45	11.65	11.59
0.86	9.29	-0.23	15.22	15.17	37.86	-16.34	0.47	11.56	11.49
0.87	9.40	-0.23	15.24	15.18	37.87	-16.80	0.48	11.47	11.38
0.88	9.50	-0.24	15.25	15.19	37.88	-17.25	0.50	11.39	11.28
0.89	9.61	-0.24	15.27	15.21	37.89	-17.71	0.52	11.30	11.17
0.9	9.72	-0.24	15.28	15.22	37.9	-18.16	0.54	11.21	11.07
0.91	9.83	-0.25	15.29	15.24	37.91	-18.61	0.55	11.13	10.97
0.92	9.94	-0.25	15.31	15.25	37.92	-19.07	0.57	11.04	10.86
0.93	10.04	-0.25	15.32	15.26	37.93	-19.52	0.59	10.95	10.76

0.94	10.15	-0.25	15.34	15.28	37.94	-19.98	0.61	10.87	10.66
0.95	10.26	-0.26	15.35	15.29	37.95	-20.43	0.63	10.78	10.55
0.96	10.37	-0.26	15.37	15.30	37.96	-20.88	0.64	10.70	10.45
0.97	10.48	-0.26	15.38	15.32	37.97	-21.34	0.66	10.61	10.35
0.98	10.58	-0.26	15.39	15.33	37.98	-21.79	0.68	10.53	10.25
0.99	10.69	-0.27	15.41	15.34	37.99	-22.25	0.70	10.44	10.15
1	10.80	-0.27	15.42	15.36	38	-22.70	0.72	10.36	10.04
1.01	10.64	-0.27	15.40	15.33	38.01	-22.46	0.70	10.42	10.12
1.02	10.35	-0.26	15.36	15.30	38.02	-21.73	0.68	10.53	10.26
1.03	10.15	-0.25	15.34	15.28	38.03	-21.32	0.66	10.61	10.35
1.04	9.94	-0.25	15.31	15.25	38.04	-20.91	0.65	10.69	10.45
1.05	9.72	-0.24	15.28	15.22	38.05	-20.42	0.63	10.78	10.55
1.06	9.51	-0.24	15.25	15.19	38.06	-19.97	0.61	10.87	10.66
1.07	9.29	-0.23	15.22	15.17	38.07	-19.53	0.59	10.95	10.76
1.08	9.07	-0.23	15.19	15.14	38.08	-19.07	0.57	11.04	10.86
1.09	8.86	-0.22	15.17	15.11	38.09	-18.61	0.55	11.13	10.97
1.1	8.64	-0.22	15.14	15.09	38.1	-18.16	0.54	11.21	11.07
1.11	8.42	-0.21	15.11	15.06	38.11	-17.71	0.52	11.30	11.17
1.12	8.21	-0.21	15.08	15.03	38.12	-17.25	0.50	11.39	11.28
1.13	7.99	-0.20	15.05	15.00	38.13	-16.80	0.48	11.47	11.38
1.14	7.78	-0.19	15.02	14.98	38.14	-16.34	0.47	11.56	11.49
1.15	7.56	-0.19	15.00	14.95	38.15	-15.89	0.45	11.65	11.59
1.16	7.34	-0.18	14.97	14.92	38.16	-15.44	0.43	11.74	11.69
1.17	7.13	-0.18	14.94	14.90	38.17	-14.98	0.41	11.83	11.80
1.18	6.91	-0.17	14.91	14.87	38.18	-14.53	0.40	11.91	11.90
1.19	6.70	-0.17	14.88	14.84	38.19	-14.07	0.38	12.00	12.01
1.2	6.48	-0.16	14.85	14.81	38.2	-13.62	0.36	12.09	12.11
1.21	6.26	-0.16	14.82	14.79	38.21	-13.16	0.34	12.18	12.21
1.22	6.05	-0.15	14.80	14.76	38.22	-12.71	0.33	12.26	12.31
1.23	5.83	-0.15	14.77	14.73	38.23	-12.26	0.31	12.35	12.40
1.24	5.62	-0.14	14.74	14.71	38.24	-11.80	0.30	12.43	12.49
1.25	5.40	-0.13	14.71	14.68	38.25	-11.35	0.28	12.50	12.57
1.26	5.18	-0.13	14.68	14.65	38.26	-10.89	0.27	12.56	12.63
1.27	4.97	-0.12	14.65	14.62	38.27	-10.44	0.26	12.62	12.69
1.28	4.75	-0.12	14.63	14.60	38.28	-9.99	0.25	12.68	12.75
1.29	4.54	-0.11	14.60	14.57	38.29	-9.53	0.24	12.74	12.80
1.3	4.32	-0.11	14.57	14.54	38.3	-9.08	0.23	12.80	12.86
1.31	4.10	-0.10	14.54	14.52	38.31	-8.63	0.22	12.86	12.92
1.32	3.89	-0.10	14.51	14.49	38.32	-8.17	0.20	12.92	12.97
1.33	3.67	-0.09	14.48	14.46	38.33	-7.72	0.19	12.98	13.03
1.34	3.46	-0.09	14.45	14.43	38.34	-7.26	0.18	13.04	13.09
1.35	3.24	-0.08	14.43	14.41	38.35	-6.81	0.17	13.10	13.15
1.36	3.02	-0.08	14.40	14.38	38.36	-6.36	0.16	13.16	13.20
1.37	2.81	-0.07	14.37	14.35	38.37	-5.90	0.15	13.22	13.26
1.38	2.59	-0.06	14.34	14.33	38.38	-5.45	0.14	13.28	13.32
1.39	2.38	-0.06	14.31	14.30	38.39	-4.99	0.12	13.34	13.37
1.4	2.16	-0.05	14.28	14.27	38.4	-4.54	0.11	13.40	13.43
1.41	1.94	-0.05	14.26	14.24	38.41	-4.09	0.10	13.46	13.49
1.42	1.73	-0.04	14.23	14.22	38.42	-3.63	0.09	13.52	13.54
1.43	1.51	-0.04	14.20	14.19	38.43	-3.18	0.08	13.58	13.60
1.44	1.30	-0.03	14.17	14.16	38.44	-2.72	0.07	13.64	13.66
1.45	1.08	-0.03	14.14	14.14	38.45	-2.27	0.06	13.70	13.72
1.46	0.86	-0.02	14.11	14.11	38.46	-1.82	0.05	13.76	13.77
1.47	0.65	-0.02	14.08	14.08	38.47	-1.36	0.03	13.82	13.83
1.48	0.43	-0.01	14.06	14.05	38.48	-0.91	0.02	13.88	13.89
1.49	0.22	-0.01	14.03	14.03	38.49	-0.45	0.01	13.94	13.94
1.5	0.00	0.00	14.00	14.00	38.5	0.00	0.00	14.00	14.00

1.51	-0.22	0.01	13.97	13.97	38.51	0.45	-0.01	14.06	14.06
1.52	-0.43	0.01	13.94	13.95	38.52	0.91	-0.02	14.12	14.11
1.53	-0.65	0.02	13.91	13.92	38.53	1.36	-0.03	14.18	14.17
1.54	-0.86	0.02	13.89	13.89	38.54	1.82	-0.05	14.24	14.23
1.55	-1.08	0.03	13.86	13.86	38.55	2.27	-0.06	14.30	14.29
1.56	-1.30	0.03	13.83	13.84	38.56	2.72	-0.07	14.36	14.34
1.57	-1.51	0.04	13.80	13.81	38.57	3.18	-0.08	14.42	14.40
1.58	-1.73	0.04	13.77	13.78	38.58	3.63	-0.09	14.48	14.46
1.59	-1.94	0.05	13.74	13.76	38.59	4.09	-0.10	14.54	14.51
1.6	-2.16	0.05	13.71	13.73	38.6	4.54	-0.11	14.60	14.57
1.61	-2.38	0.06	13.69	13.70	38.61	4.99	-0.12	14.66	14.63
1.62	-2.59	0.06	13.66	13.68	38.62	5.45	-0.14	14.72	14.68
1.63	-2.81	0.07	13.63	13.65	38.63	5.90	-0.15	14.78	14.74
1.64	-3.02	0.08	13.60	13.62	38.64	6.36	-0.16	14.84	14.80
1.65	-3.24	0.08	13.57	13.59	38.65	6.81	-0.17	14.90	14.86
1.66	-3.46	0.09	13.54	13.57	38.66	7.26	-0.18	14.96	14.91
1.67	-3.67	0.09	13.52	13.54	38.67	7.72	-0.19	15.02	14.97
1.68	-3.89	0.10	13.49	13.51	38.68	8.17	-0.20	15.08	15.03
1.69	-4.10	0.10	13.46	13.49	38.69	8.63	-0.22	15.14	15.08
1.7	-4.32	0.11	13.43	13.46	38.7	9.08	-0.23	15.20	15.14
1.71	-4.54	0.11	13.40	13.43	38.71	9.53	-0.24	15.26	15.20
1.72	-4.75	0.12	13.37	13.40	38.72	9.99	-0.25	15.32	15.26
1.73	-4.97	0.12	13.34	13.38	38.73	10.44	-0.26	15.37	15.31
1.74	-5.18	0.13	13.32	13.35	38.74	10.90	-0.27	15.43	15.37
1.75	-5.40	0.13	13.29	13.32	38.75	11.35	-0.28	15.53	15.49
1.76	-5.62	0.14	13.26	13.30	38.76	11.80	-0.30	15.69	15.71
1.77	-5.83	0.15	13.23	13.27	38.77	12.26	-0.31	15.89	16.00
1.78	-6.05	0.15	13.20	13.24	38.78	12.71	-0.33	16.13	16.35
1.79	-6.26	0.16	13.17	13.21	38.79	13.16	-0.34	16.40	16.75
1.8	-6.48	0.16	13.15	13.19	38.8	13.62	-0.36	16.68	17.18
1.81	-6.70	0.17	13.12	13.16	38.81	14.07	-0.38	16.99	17.63
1.82	-6.91	0.17	13.09	13.13	38.82	14.53	-0.40	17.30	18.10
1.83	-7.13	0.18	13.06	13.11	38.83	14.98	-0.41	17.62	18.57
1.84	-7.34	0.18	13.03	13.08	38.84	15.44	-0.43	17.95	19.07
1.85	-7.56	0.19	13.00	13.05	38.85	15.89	-0.45	18.28	19.58
1.86	-7.78	0.19	12.97	13.02	38.86	16.34	-0.47	18.62	20.09
1.87	-7.99	0.20	12.95	13.00	38.87	16.80	-0.48	18.95	20.59
1.88	-8.21	0.21	12.92	12.97	38.88	17.25	-0.50	19.29	21.11
1.89	-8.42	0.21	12.89	12.94	38.89	17.71	-0.52	19.64	21.63
1.9	-8.64	0.22	12.86	12.92	38.9	18.16	-0.54	19.99	22.16
1.91	-8.86	0.22	12.83	12.89	38.91	18.61	-0.55	20.34	22.68
1.92	-9.07	0.23	12.80	12.86	38.92	19.07	-0.57	20.69	23.21
1.93	-9.29	0.23	12.78	12.83	38.93	19.52	-0.59	21.04	23.74
1.94	-9.50	0.24	12.75	12.81	38.94	19.98	-0.61	21.39	24.26
1.95	-9.72	0.24	12.72	12.78	38.95	20.43	-0.63	21.73	24.79
1.96	-9.94	0.25	12.69	12.75	38.96	20.88	-0.64	22.09	25.33
1.97	-10.15	0.25	12.66	12.73	38.97	21.34	-0.66	22.45	25.87
1.98	-10.37	0.26	12.63	12.70	38.98	21.79	-0.68	22.80	26.41
1.99	-10.58	0.26	12.60	12.67	38.99	22.25	-0.70	23.16	26.95
2	-10.80	0.27	12.58	12.65	39	22.70	-0.72	23.52	27.49
2.01	-10.66	0.27	12.60	12.67	39.01	22.46	-0.70	23.27	27.11
2.02	-10.34	0.26	12.64	12.70	39.02	21.73	-0.68	22.77	26.36
2.03	-10.16	0.25	12.66	12.73	39.03	21.32	-0.66	22.44	25.85
2.04	-9.94	0.25	12.69	12.75	39.04	20.91	-0.65	22.10	25.35
2.05	-9.72	0.24	12.72	12.78	39.05	20.42	-0.63	21.73	24.79
2.06	-9.51	0.24	12.75	12.81	39.06	19.97	-0.61	21.38	24.26
2.07	-9.29	0.23	12.78	12.84	39.07	19.53	-0.59	21.04	23.74

2.08	-9.07	0.23	12.80	12.86	39.08	19.07	-0.57	20.69	23.21
2.09	-8.86	0.22	12.83	12.89	39.09	18.61	-0.55	20.34	22.68
2.1	-8.64	0.22	12.86	12.92	39.1	18.16	-0.54	19.99	22.16
2.11	-8.42	0.21	12.89	12.94	39.11	17.71	-0.52	19.64	21.63
2.12	-8.21	0.21	12.92	12.97	39.12	17.25	-0.50	19.29	21.11
2.13	-7.99	0.20	12.95	13.00	39.13	16.80	-0.48	18.96	20.59
2.14	-7.78	0.19	12.97	13.02	39.14	16.34	-0.47	18.62	20.09
2.15	-7.56	0.19	13.00	13.05	39.15	15.89	-0.45	18.28	19.58
2.16	-7.34	0.18	13.03	13.08	39.16	15.44	-0.43	17.95	19.07
2.17	-7.13	0.18	13.06	13.11	39.17	14.98	-0.41	17.61	18.57
2.18	-6.91	0.17	13.09	13.13	39.18	14.53	-0.40	17.30	18.10
2.19	-6.70	0.17	13.12	13.16	39.19	14.07	-0.38	16.99	17.63
2.2	-6.48	0.16	13.15	13.19	39.2	13.62	-0.36	16.68	17.17
2.21	-6.26	0.16	13.17	13.21	39.21	13.16	-0.34	16.40	16.75
2.22	-6.05	0.15	13.20	13.24	39.22	12.71	-0.33	16.13	16.35
2.23	-5.83	0.15	13.23	13.27	39.23	12.26	-0.31	15.89	16.00
2.24	-5.62	0.14	13.26	13.30	39.24	11.80	-0.30	15.69	15.70
2.25	-5.40	0.13	13.29	13.32	39.25	11.35	-0.28	15.53	15.48
2.26	-5.18	0.13	13.32	13.35	39.26	10.89	-0.27	15.44	15.38
2.27	-4.97	0.12	13.34	13.38	39.27	10.44	-0.26	15.38	15.32
2.28	-4.75	0.12	13.37	13.40	39.28	9.99	-0.25	15.32	15.26
2.29	-4.54	0.11	13.40	13.43	39.29	9.53	-0.24	15.26	15.20
2.3	-4.32	0.11	13.43	13.46	39.3	9.08	-0.23	15.20	15.14
2.31	-4.10	0.10	13.46	13.49	39.31	8.63	-0.22	15.14	15.08
2.32	-3.89	0.10	13.49	13.51	39.32	8.17	-0.20	15.08	15.03
2.33	-3.67	0.09	13.52	13.54	39.33	7.72	-0.19	15.02	14.97
2.34	-3.46	0.09	13.54	13.57	39.34	7.26	-0.18	14.96	14.91
2.35	-3.24	0.08	13.57	13.59	39.35	6.81	-0.17	14.90	14.86
2.36	-3.02	0.08	13.60	13.62	39.36	6.36	-0.16	14.84	14.80
2.37	-2.81	0.07	13.63	13.65	39.37	5.90	-0.15	14.78	14.74
2.38	-2.59	0.06	13.66	13.68	39.38	5.45	-0.14	14.72	14.68
2.39	-2.38	0.06	13.69	13.70	39.39	4.99	-0.12	14.66	14.63
2.4	-2.16	0.05	13.71	13.73	39.4	4.54	-0.11	14.60	14.57
2.41	-1.94	0.05	13.74	13.76	39.41	4.09	-0.10	14.54	14.51
2.42	-1.73	0.04	13.77	13.78	39.42	3.63	-0.09	14.48	14.46
2.43	-1.51	0.04	13.80	13.81	39.43	3.18	-0.08	14.42	14.40
2.44	-1.30	0.03	13.83	13.84	39.44	2.72	-0.07	14.36	14.34
2.45	-1.08	0.03	13.86	13.86	39.45	2.27	-0.06	14.30	14.29
2.46	-0.86	0.02	13.89	13.89	39.46	1.82	-0.05	14.24	14.23
2.47	-0.65	0.02	13.91	13.92	39.47	1.36	-0.03	14.18	14.17
2.48	-0.43	0.01	13.94	13.95	39.48	0.91	-0.02	14.12	14.11
2.49	-0.22	0.01	13.97	13.97	39.49	0.45	-0.01	14.06	14.06
2.5	0.00	0.00	14.00	14.00	39.5	0.00	0.00	14.00	14.00
2.51	0.22	-0.01	14.03	14.03	39.51	-0.45	0.01	13.94	13.94
2.52	0.43	-0.01	14.06	14.05	39.52	-0.91	0.02	13.88	13.89
2.53	0.65	-0.02	14.08	14.08	39.53	-1.36	0.03	13.82	13.83
2.54	0.86	-0.02	14.11	14.11	39.54	-1.82	0.05	13.76	13.77
2.55	1.08	-0.03	14.14	14.14	39.55	-2.27	0.06	13.70	13.72
2.56	1.30	-0.03	14.17	14.16	39.56	-2.72	0.07	13.64	13.66
2.57	1.51	-0.04	14.20	14.19	39.57	-3.18	0.08	13.58	13.60
2.58	1.73	-0.04	14.23	14.22	39.58	-3.63	0.09	13.52	13.54
2.59	1.94	-0.05	14.26	14.24	39.59	-4.09	0.10	13.46	13.49
2.6	2.16	-0.05	14.28	14.27	39.6	-4.54	0.11	13.40	13.43
2.61	2.38	-0.06	14.31	14.30	39.61	-4.99	0.12	13.34	13.37
2.62	2.59	-0.06	14.34	14.33	39.62	-5.45	0.14	13.28	13.32
2.63	2.81	-0.07	14.37	14.35	39.63	-5.90	0.15	13.22	13.26
2.64	3.02	-0.08	14.40	14.38	39.64	-6.36	0.16	13.16	13.20

2.65	3.24	-0.08	14.43	14.41	39.65	-6.81	0.17	13.10	13.15
2.66	3.46	-0.09	14.45	14.43	39.66	-7.26	0.18	13.04	13.09
2.67	3.67	-0.09	14.48	14.46	39.67	-7.72	0.19	12.98	13.03
2.68	3.89	-0.10	14.51	14.49	39.68	-8.17	0.20	12.92	12.97
2.69	4.10	-0.10	14.54	14.52	39.69	-8.63	0.22	12.86	12.92
2.7	4.32	-0.11	14.57	14.54	39.7	-9.08	0.23	12.80	12.86
2.71	4.54	-0.11	14.60	14.57	39.71	-9.53	0.24	12.74	12.80
2.72	4.75	-0.12	14.63	14.60	39.72	-9.99	0.25	12.68	12.75
2.73	4.97	-0.12	14.65	14.62	39.73	-10.44	0.26	12.62	12.69
2.74	5.18	-0.13	14.68	14.65	39.74	-10.90	0.27	12.56	12.63
2.75	5.40	-0.13	14.71	14.68	39.75	-11.35	0.28	12.50	12.57
2.76	5.62	-0.14	14.74	14.71	39.76	-11.80	0.30	12.43	12.49
2.77	5.83	-0.15	14.77	14.73	39.77	-12.26	0.31	12.35	12.40
2.78	6.05	-0.15	14.80	14.76	39.78	-12.71	0.33	12.26	12.31
2.79	6.26	-0.16	14.82	14.79	39.79	-13.16	0.34	12.18	12.21
2.8	6.48	-0.16	14.85	14.81	39.8	-13.62	0.36	12.09	12.11
2.81	6.70	-0.17	14.88	14.84	39.81	-14.07	0.38	12.00	12.01
2.82	6.91	-0.17	14.91	14.87	39.82	-14.53	0.40	11.91	11.90
2.83	7.13	-0.18	14.94	14.90	39.83	-14.98	0.41	11.83	11.80
2.84	7.34	-0.18	14.97	14.92	39.84	-15.44	0.43	11.74	11.69
2.85	7.56	-0.19	15.00	14.95	39.85	-15.89	0.45	11.65	11.59
2.86	7.78	-0.19	15.02	14.98	39.86	-16.34	0.47	11.56	11.49
2.87	7.99	-0.20	15.05	15.00	39.87	-16.80	0.48	11.47	11.38
2.88	8.21	-0.21	15.08	15.03	39.88	-17.25	0.50	11.39	11.28
2.89	8.42	-0.21	15.11	15.06	39.89	-17.71	0.52	11.30	11.17
2.9	8.64	-0.22	15.14	15.09	39.9	-18.16	0.54	11.21	11.07
2.91	8.86	-0.22	15.17	15.11	39.91	-18.61	0.55	11.13	10.97
2.92	9.07	-0.23	15.19	15.14	39.92	-19.07	0.57	11.04	10.86
2.93	9.29	-0.23	15.22	15.17	39.93	-19.52	0.59	10.95	10.76
2.94	9.50	-0.24	15.25	15.19	39.94	-19.98	0.61	10.87	10.66
2.95	9.72	-0.24	15.28	15.22	39.95	-20.43	0.63	10.78	10.55
2.96	9.94	-0.25	15.31	15.25	39.96	-20.88	0.64	10.70	10.45
2.97	10.15	-0.25	15.34	15.28	39.97	-21.34	0.66	10.61	10.35
2.98	10.37	-0.26	15.37	15.30	39.98	-21.79	0.68	10.53	10.25
2.99	10.58	-0.26	15.39	15.33	39.99	-22.25	0.70	10.44	10.15
3	10.80	-0.27	15.42	15.36	40	-22.70	0.72	10.36	10.04
3.01	10.66	-0.27	15.40	15.34	40.01	-22.46	0.70	10.42	10.12
3.02	10.34	-0.26	15.36	15.30	40.02	-21.73	0.68	10.53	10.26
3.03	10.16	-0.25	15.34	15.28	40.03	-21.32	0.66	10.61	10.35
3.04	9.94	-0.25	15.31	15.25	40.04	-20.91	0.65	10.69	10.45
3.05	9.72	-0.24	15.28	15.22	40.05	-20.42	0.63	10.78	10.55
3.06	9.51	-0.24	15.25	15.19	40.06	-19.97	0.61	10.87	10.66
3.07	9.29	-0.23	15.22	15.17	40.07	-19.53	0.59	10.95	10.76
3.08	9.07	-0.23	15.19	15.14	40.08	-19.07	0.57	11.04	10.86
3.09	8.86	-0.22	15.17	15.11	40.09	-18.61	0.55	11.13	10.97
3.1	8.64	-0.22	15.14	15.09	40.1	-18.16	0.54	11.21	11.07
3.11	8.42	-0.21	15.11	15.06	40.11	-17.71	0.52	11.30	11.17
3.12	8.21	-0.21	15.08	15.03	40.12	-17.25	0.50	11.39	11.28
3.13	7.99	-0.20	15.05	15.00	40.13	-16.80	0.48	11.47	11.38
3.14	7.78	-0.19	15.02	14.98	40.14	-16.34	0.47	11.56	11.49
3.15	7.56	-0.19	15.00	14.95	40.15	-15.89	0.45	11.65	11.59
3.16	7.34	-0.18	14.97	14.92	40.16	-15.44	0.43	11.74	11.69
3.17	7.13	-0.18	14.94	14.90	40.17	-14.98	0.41	11.83	11.80
3.18	6.91	-0.17	14.91	14.87	40.18	-14.53	0.40	11.91	11.90
3.19	6.70	-0.17	14.88	14.84	40.19	-14.07	0.38	12.00	12.01
3.2	6.48	-0.16	14.85	14.81	40.2	-13.62	0.36	12.09	12.11
3.21	6.26	-0.16	14.82	14.79	40.21	-13.16	0.34	12.18	12.21

3.22	6.05	-0.15	14.80	14.76	40.22	-12.71	0.33	12.26	12.31
3.23	5.83	-0.15	14.77	14.73	40.23	-12.26	0.31	12.35	12.40
3.24	5.62	-0.14	14.74	14.71	40.24	-11.80	0.30	12.43	12.49
3.25	5.40	-0.13	14.71	14.68	40.25	-11.35	0.28	12.50	12.57
3.26	5.18	-0.13	14.68	14.65	40.26	-10.89	0.27	12.56	12.63
3.27	4.97	-0.12	14.65	14.62	40.27	-10.44	0.26	12.62	12.69
3.28	4.75	-0.12	14.63	14.60	40.28	-9.99	0.25	12.68	12.75
3.29	4.54	-0.11	14.60	14.57	40.29	-9.53	0.24	12.74	12.80
3.3	4.32	-0.11	14.57	14.54	40.3	-9.08	0.23	12.80	12.86
3.31	4.10	-0.10	14.54	14.52	40.31	-8.63	0.22	12.86	12.92
3.32	3.89	-0.10	14.51	14.49	40.32	-8.17	0.20	12.92	12.97
3.33	3.67	-0.09	14.48	14.46	40.33	-7.72	0.19	12.98	13.03
3.34	3.46	-0.09	14.45	14.43	40.34	-7.26	0.18	13.04	13.09
3.35	3.24	-0.08	14.43	14.41	40.35	-6.81	0.17	13.10	13.15
3.36	3.02	-0.08	14.40	14.38	40.36	-6.36	0.16	13.16	13.20
3.37	2.81	-0.07	14.37	14.35	40.37	-5.90	0.15	13.22	13.26
3.38	2.59	-0.06	14.34	14.33	40.38	-5.45	0.14	13.28	13.32
3.39	2.38	-0.06	14.31	14.30	40.39	-4.99	0.12	13.34	13.37
3.4	2.16	-0.05	14.28	14.27	40.4	-4.54	0.11	13.40	13.43
3.41	1.94	-0.05	14.26	14.24	40.41	-4.09	0.10	13.46	13.49
3.42	1.73	-0.04	14.23	14.22	40.42	-3.63	0.09	13.52	13.54
3.43	1.51	-0.04	14.20	14.19	40.43	-3.18	0.08	13.58	13.60
3.44	1.30	-0.03	14.17	14.16	40.44	-2.72	0.07	13.64	13.66
3.45	1.08	-0.03	14.14	14.14	40.45	-2.27	0.06	13.70	13.72
3.46	0.86	-0.02	14.11	14.11	40.46	-1.82	0.05	13.76	13.77
3.47	0.65	-0.02	14.08	14.08	40.47	-1.36	0.03	13.82	13.83
3.48	0.43	-0.01	14.06	14.05	40.48	-0.91	0.02	13.88	13.89
3.49	0.22	-0.01	14.03	14.03	40.49	-0.45	0.01	13.94	13.94
3.5	0.00	0.00	14.00	14.00	40.5	0.00	0.00	14.00	14.00
3.51	-0.22	0.01	13.97	13.97	40.51	0.45	-0.01	14.06	14.06
3.52	-0.43	0.01	13.94	13.95	40.52	0.91	-0.02	14.12	14.11
3.53	-0.65	0.02	13.91	13.92	40.53	1.36	-0.03	14.18	14.17
3.54	-0.86	0.02	13.89	13.89	40.54	1.82	-0.05	14.24	14.23
3.55	-1.08	0.03	13.86	13.86	40.55	2.27	-0.06	14.30	14.29
3.56	-1.30	0.03	13.83	13.84	40.56	2.72	-0.07	14.36	14.34
3.57	-1.51	0.04	13.80	13.81	40.57	3.18	-0.08	14.42	14.40
3.58	-1.73	0.04	13.77	13.78	40.58	3.63	-0.09	14.48	14.46
3.59	-1.94	0.05	13.74	13.76	40.59	4.09	-0.10	14.54	14.51
3.6	-2.16	0.05	13.71	13.73	40.6	4.54	-0.11	14.60	14.57
3.61	-2.38	0.06	13.69	13.70	40.61	4.99	-0.12	14.66	14.63
3.62	-2.59	0.06	13.66	13.68	40.62	5.45	-0.14	14.72	14.68
3.63	-2.81	0.07	13.63	13.65	40.63	5.90	-0.15	14.78	14.74
3.64	-3.02	0.08	13.60	13.62	40.64	6.36	-0.16	14.84	14.80
3.65	-3.24	0.08	13.57	13.59	40.65	6.81	-0.17	14.90	14.86
3.66	-3.46	0.09	13.54	13.57	40.66	7.26	-0.18	14.96	14.91
3.67	-3.67	0.09	13.52	13.54	40.67	7.72	-0.19	15.02	14.97
3.68	-3.89	0.10	13.49	13.51	40.68	8.17	-0.20	15.08	15.03
3.69	-4.10	0.10	13.46	13.49	40.69	8.63	-0.22	15.14	15.08
3.7	-4.32	0.11	13.43	13.46	40.7	9.08	-0.23	15.20	15.14
3.71	-4.54	0.11	13.40	13.43	40.71	9.53	-0.24	15.26	15.20
3.72	-4.75	0.12	13.37	13.40	40.72	9.99	-0.25	15.32	15.26
3.73	-4.97	0.12	13.34	13.38	40.73	10.44	-0.26	15.37	15.31
3.74	-5.18	0.13	13.32	13.35	40.74	10.90	-0.27	15.43	15.37
3.75	-5.40	0.13	13.29	13.32	40.75	11.35	-0.28	15.53	15.49
3.76	-5.62	0.14	13.26	13.30	40.76	11.80	-0.30	15.69	15.71
3.77	-5.83	0.15	13.23	13.27	40.77	12.26	-0.31	15.89	16.00
3.78	-6.05	0.15	13.20	13.24	40.78	12.71	-0.33	16.13	16.35

3.79	-6.26	0.16	13.17	13.21	40.79	13.16	-0.34	16.40	16.75
3.8	-6.48	0.16	13.15	13.19	40.8	13.62	-0.36	16.68	17.18
3.81	-6.70	0.17	13.12	13.16	40.81	14.07	-0.38	16.99	17.63
3.82	-6.91	0.17	13.09	13.13	40.82	14.53	-0.40	17.30	18.10
3.83	-7.13	0.18	13.06	13.11	40.83	14.98	-0.41	17.62	18.57
3.84	-7.34	0.18	13.03	13.08	40.84	15.44	-0.43	17.95	19.07
3.85	-7.56	0.19	13.00	13.05	40.85	15.89	-0.45	18.28	19.58
3.86	-7.78	0.19	12.97	13.02	40.86	16.34	-0.47	18.62	20.09
3.87	-7.99	0.20	12.95	13.00	40.87	16.80	-0.48	18.95	20.59
3.88	-8.21	0.21	12.92	12.97	40.88	17.25	-0.50	19.29	21.11
3.89	-8.42	0.21	12.89	12.94	40.89	17.71	-0.52	19.64	21.63
3.9	-8.64	0.22	12.86	12.92	40.9	18.16	-0.54	19.99	22.16
3.91	-8.86	0.22	12.83	12.89	40.91	18.61	-0.55	20.34	22.68
3.92	-9.07	0.23	12.80	12.86	40.92	19.07	-0.57	20.69	23.21
3.93	-9.29	0.23	12.78	12.83	40.93	19.52	-0.59	21.04	23.74
3.94	-9.50	0.24	12.75	12.81	40.94	19.98	-0.61	21.39	24.26
3.95	-9.72	0.24	12.72	12.78	40.95	20.43	-0.63	21.73	24.79
3.96	-9.94	0.25	12.69	12.75	40.96	20.88	-0.64	22.09	25.33
3.97	-10.15	0.25	12.66	12.73	40.97	21.34	-0.66	22.45	25.87
3.98	-10.37	0.26	12.63	12.70	40.98	21.79	-0.68	22.80	26.41
3.99	-10.58	0.26	12.60	12.67	40.99	22.25	-0.70	23.16	26.95
4	-10.80	0.27	12.58	12.65	41	22.70	-0.72	23.52	27.49
4.01	-10.66	0.27	12.60	12.67	41.01	22.46	-0.70	23.27	27.11
4.02	-10.34	0.26	12.64	12.70	41.02	21.73	-0.68	22.77	26.36
4.03	-10.16	0.25	12.66	12.73	41.03	21.32	-0.66	22.44	25.85
4.04	-9.94	0.25	12.69	12.75	41.04	20.91	-0.65	22.10	25.35
4.05	-9.72	0.24	12.72	12.78	41.05	20.42	-0.63	21.73	24.79
4.06	-9.51	0.24	12.75	12.81	41.06	19.97	-0.61	21.38	24.26
4.07	-9.29	0.23	12.78	12.83	41.07	19.53	-0.59	21.04	23.74
4.08	-9.07	0.23	12.80	12.86	41.08	19.07	-0.57	20.69	23.21
4.09	-8.86	0.22	12.83	12.89	41.09	18.61	-0.55	20.34	22.68
4.1	-8.64	0.22	12.86	12.92	41.1	18.16	-0.54	19.99	22.16
4.11	-8.42	0.21	12.89	12.94	41.11	17.71	-0.52	19.64	21.63
4.12	-8.21	0.21	12.92	12.97	41.12	17.25	-0.50	19.29	21.11
4.13	-7.99	0.20	12.95	13.00	41.13	16.80	-0.48	18.96	20.59
4.14	-7.78	0.19	12.97	13.02	41.14	16.34	-0.47	18.62	20.09
4.15	-7.56	0.19	13.00	13.05	41.15	15.89	-0.45	18.28	19.58
4.16	-7.34	0.18	13.03	13.08	41.16	15.44	-0.43	17.95	19.07
4.17	-7.13	0.18	13.06	13.11	41.17	14.98	-0.41	17.61	18.57
4.18	-6.91	0.17	13.09	13.13	41.18	14.53	-0.40	17.30	18.10
4.19	-6.70	0.17	13.12	13.16	41.19	14.07	-0.38	16.99	17.63
4.2	-6.48	0.16	13.15	13.19	41.2	13.62	-0.36	16.68	17.17
4.21	-6.26	0.16	13.17	13.21	41.21	13.16	-0.34	16.40	16.75
4.22	-6.05	0.15	13.20	13.24	41.22	12.71	-0.33	16.13	16.35
4.23	-5.83	0.15	13.23	13.27	41.23	12.26	-0.31	15.89	16.00
4.24	-5.62	0.14	13.26	13.30	41.24	11.80	-0.30	15.69	15.70
4.25	-5.40	0.13	13.29	13.32	41.25	11.35	-0.28	15.53	15.48
4.26	-5.18	0.13	13.32	13.35	41.26	10.89	-0.27	15.44	15.38
4.27	-4.97	0.12	13.34	13.38	41.27	10.44	-0.26	15.38	15.32
4.28	-4.75	0.12	13.37	13.40	41.28	9.99	-0.25	15.32	15.26
4.29	-4.54	0.11	13.40	13.43	41.29	9.53	-0.24	15.26	15.20
4.3	-4.32	0.11	13.43	13.46	41.3	9.08	-0.23	15.20	15.14
4.31	-4.10	0.10	13.46	13.49	41.31	8.63	-0.22	15.14	15.08
4.32	-3.89	0.10	13.49	13.51	41.32	8.17	-0.20	15.08	15.03
4.33	-3.67	0.09	13.52	13.54	41.33	7.72	-0.19	15.02	14.97
4.34	-3.46	0.09	13.54	13.57	41.34	7.26	-0.18	14.96	14.91
4.35	-3.24	0.08	13.57	13.59	41.35	6.81	-0.17	14.90	14.86

4.36	-3.02	0.08	13.60	13.62	41.36	6.36	-0.16	14.84	14.80
4.37	-2.81	0.07	13.63	13.65	41.37	5.90	-0.15	14.78	14.74
4.38	-2.59	0.06	13.66	13.68	41.38	5.45	-0.14	14.72	14.68
4.39	-2.38	0.06	13.69	13.70	41.39	4.99	-0.12	14.66	14.63
4.4	-2.16	0.05	13.71	13.73	41.4	4.54	-0.11	14.60	14.57
4.41	-1.94	0.05	13.74	13.76	41.41	4.09	-0.10	14.54	14.51
4.42	-1.73	0.04	13.77	13.78	41.42	3.63	-0.09	14.48	14.46
4.43	-1.51	0.04	13.80	13.81	41.43	3.18	-0.08	14.42	14.40
4.44	-1.30	0.03	13.83	13.84	41.44	2.72	-0.07	14.36	14.34
4.45	-1.08	0.03	13.86	13.86	41.45	2.27	-0.06	14.30	14.29
4.46	-0.86	0.02	13.89	13.89	41.46	1.82	-0.05	14.24	14.23
4.47	-0.65	0.02	13.91	13.92	41.47	1.36	-0.03	14.18	14.17
4.48	-0.43	0.01	13.94	13.95	41.48	0.91	-0.02	14.12	14.11
4.49	-0.22	0.01	13.97	13.97	41.49	0.45	-0.01	14.06	14.06
4.5	0.00	0.00	14.00	14.00	41.5	0.00	0.00	14.00	14.00
4.51	0.22	-0.01	14.03	14.03	41.51	-0.45	0.01	13.94	13.94
4.52	0.43	-0.01	14.06	14.05	41.52	-0.91	0.02	13.88	13.89
4.53	0.65	-0.02	14.08	14.08	41.53	-1.36	0.03	13.82	13.83
4.54	0.86	-0.02	14.11	14.11	41.54	-1.82	0.05	13.76	13.77
4.55	1.08	-0.03	14.14	14.14	41.55	-2.27	0.06	13.70	13.72
4.56	1.30	-0.03	14.17	14.16	41.56	-2.72	0.07	13.64	13.66
4.57	1.51	-0.04	14.20	14.19	41.57	-3.18	0.08	13.58	13.60
4.58	1.73	-0.04	14.23	14.22	41.58	-3.63	0.09	13.52	13.54
4.59	1.94	-0.05	14.26	14.24	41.59	-4.09	0.10	13.46	13.49
4.6	2.16	-0.05	14.28	14.27	41.6	-4.54	0.11	13.40	13.43
4.61	2.38	-0.06	14.31	14.30	41.61	-4.99	0.12	13.34	13.37
4.62	2.59	-0.06	14.34	14.33	41.62	-5.45	0.14	13.28	13.32
4.63	2.81	-0.07	14.37	14.35	41.63	-5.90	0.15	13.22	13.26
4.64	3.02	-0.08	14.40	14.38	41.64	-6.36	0.16	13.16	13.20
4.65	3.24	-0.08	14.43	14.41	41.65	-6.81	0.17	13.10	13.15
4.66	3.46	-0.09	14.45	14.43	41.66	-7.26	0.18	13.04	13.09
4.67	3.67	-0.09	14.48	14.46	41.67	-7.72	0.19	12.98	13.03
4.68	3.89	-0.10	14.51	14.49	41.68	-8.17	0.20	12.92	12.97
4.69	4.10	-0.10	14.54	14.52	41.69	-8.63	0.22	12.86	12.92
4.7	4.32	-0.11	14.57	14.54	41.7	-9.08	0.23	12.80	12.86
4.71	4.54	-0.11	14.60	14.57	41.71	-9.53	0.24	12.74	12.80
4.72	4.75	-0.12	14.63	14.60	41.72	-9.99	0.25	12.68	12.75
4.73	4.97	-0.12	14.65	14.62	41.73	-10.44	0.26	12.62	12.69
4.74	5.18	-0.13	14.68	14.65	41.74	-10.90	0.27	12.56	12.63
4.75	5.40	-0.13	14.71	14.68	41.75	-11.35	0.28	12.50	12.57
4.76	5.62	-0.14	14.74	14.71	41.76	-11.80	0.30	12.43	12.49
4.77	5.83	-0.15	14.77	14.73	41.77	-12.26	0.31	12.35	12.40
4.78	6.05	-0.15	14.80	14.76	41.78	-12.71	0.33	12.26	12.31
4.79	6.26	-0.16	14.82	14.79	41.79	-13.16	0.34	12.18	12.21
4.8	6.48	-0.16	14.85	14.81	41.8	-13.62	0.36	12.09	12.11
4.81	6.70	-0.17	14.88	14.84	41.81	-14.07	0.38	12.00	12.01
4.82	6.91	-0.17	14.91	14.87	41.82	-14.53	0.40	11.91	11.90
4.83	7.13	-0.18	14.94	14.90	41.83	-14.98	0.41	11.83	11.80
4.84	7.34	-0.18	14.97	14.92	41.84	-15.44	0.43	11.74	11.69
4.85	7.56	-0.19	15.00	14.95	41.85	-15.89	0.45	11.65	11.59
4.86	7.78	-0.19	15.02	14.98	41.86	-16.34	0.47	11.56	11.49
4.87	7.99	-0.20	15.05	15.00	41.87	-16.80	0.48	11.47	11.38
4.88	8.21	-0.21	15.08	15.03	41.88	-17.25	0.50	11.39	11.28
4.89	8.42	-0.21	15.11	15.06	41.89	-17.71	0.52	11.30	11.17
4.9	8.64	-0.22	15.14	15.09	41.9	-18.16	0.54	11.21	11.07
4.91	8.86	-0.22	15.17	15.11	41.91	-18.61	0.55	11.13	10.97
4.92	9.07	-0.23	15.19	15.14	41.92	-19.07	0.57	11.04	10.86

4.93	9.29	-0.23	15.22	15.17	41.93	-19.52	0.59	10.95	10.76
4.94	9.50	-0.24	15.25	15.19	41.94	-19.98	0.61	10.87	10.66
4.95	9.72	-0.24	15.28	15.22	41.95	-20.43	0.63	10.78	10.55
4.96	9.94	-0.25	15.31	15.25	41.96	-20.88	0.64	10.70	10.45
4.97	10.15	-0.25	15.34	15.28	41.97	-21.34	0.66	10.61	10.35
4.98	10.37	-0.26	15.37	15.30	41.98	-21.79	0.68	10.53	10.25
4.99	10.58	-0.26	15.39	15.33	41.99	-22.25	0.70	10.44	10.15
5	10.80	-0.27	15.42	15.36	42	-22.70	0.72	10.36	10.04
5.01	10.66	-0.27	15.40	15.34	42.01	-22.46	0.70	10.42	10.12
5.02	10.34	-0.26	15.36	15.30	42.02	-21.73	0.68	10.53	10.26
5.03	10.16	-0.25	15.34	15.28	42.03	-21.32	0.66	10.61	10.35
5.04	9.94	-0.25	15.31	15.25	42.04	-20.91	0.65	10.69	10.45
5.05	9.72	-0.24	15.28	15.22	42.05	-20.42	0.63	10.78	10.55
5.06	9.51	-0.24	15.25	15.19	42.06	-19.97	0.61	10.87	10.66
5.07	9.29	-0.23	15.22	15.17	42.07	-19.53	0.59	10.95	10.76
5.08	9.07	-0.23	15.19	15.14	42.08	-19.07	0.57	11.04	10.86
5.09	8.86	-0.22	15.17	15.11	42.09	-18.61	0.55	11.13	10.97
5.1	8.64	-0.22	15.14	15.09	42.1	-18.16	0.54	11.21	11.07
5.11	8.42	-0.21	15.11	15.06	42.11	-17.71	0.52	11.30	11.17
5.12	8.21	-0.21	15.08	15.03	42.12	-17.25	0.50	11.39	11.28
5.13	7.99	-0.20	15.05	15.00	42.13	-16.80	0.48	11.47	11.38
5.14	7.78	-0.19	15.02	14.98	42.14	-16.34	0.47	11.56	11.49
5.15	7.56	-0.19	15.00	14.95	42.15	-15.89	0.45	11.65	11.59
5.16	7.34	-0.18	14.97	14.92	42.16	-15.44	0.43	11.74	11.69
5.17	7.13	-0.18	14.94	14.90	42.17	-14.98	0.41	11.83	11.80
5.18	6.91	-0.17	14.91	14.87	42.18	-14.53	0.40	11.91	11.90
5.19	6.70	-0.17	14.88	14.84	42.19	-14.07	0.38	12.00	12.01
5.2	6.48	-0.16	14.85	14.81	42.2	-13.62	0.36	12.09	12.11
5.21	6.26	-0.16	14.82	14.79	42.21	-13.16	0.34	12.18	12.21
5.22	6.05	-0.15	14.80	14.76	42.22	-12.71	0.33	12.26	12.31
5.23	5.83	-0.15	14.77	14.73	42.23	-12.26	0.31	12.35	12.40
5.24	5.62	-0.14	14.74	14.71	42.24	-11.80	0.30	12.43	12.49
5.25	5.40	-0.13	14.71	14.68	42.25	-11.35	0.28	12.50	12.57
5.26	5.18	-0.13	14.68	14.65	42.26	-10.89	0.27	12.56	12.63
5.27	4.97	-0.12	14.65	14.62	42.27	-10.44	0.26	12.62	12.69
5.28	4.75	-0.12	14.63	14.60	42.28	-9.99	0.25	12.68	12.75
5.29	4.54	-0.11	14.60	14.57	42.29	-9.53	0.24	12.74	12.80
5.3	4.32	-0.11	14.57	14.54	42.3	-9.08	0.23	12.80	12.86
5.31	4.10	-0.10	14.54	14.52	42.31	-8.63	0.22	12.86	12.92
5.32	3.89	-0.10	14.51	14.49	42.32	-8.17	0.20	12.92	12.97
5.33	3.67	-0.09	14.48	14.46	42.33	-7.72	0.19	12.98	13.03
5.34	3.46	-0.09	14.45	14.43	42.34	-7.26	0.18	13.04	13.09
5.35	3.24	-0.08	14.43	14.41	42.35	-6.81	0.17	13.10	13.15
5.36	3.02	-0.08	14.40	14.38	42.36	-6.36	0.16	13.16	13.20
5.37	2.81	-0.07	14.37	14.35	42.37	-5.90	0.15	13.22	13.26
5.38	2.59	-0.06	14.34	14.33	42.38	-5.45	0.14	13.28	13.32
5.39	2.38	-0.06	14.31	14.30	42.39	-4.99	0.12	13.34	13.37
5.4	2.16	-0.05	14.28	14.27	42.4	-4.54	0.11	13.40	13.43
5.41	1.94	-0.05	14.26	14.24	42.41	-4.09	0.10	13.46	13.49
5.42	1.73	-0.04	14.23	14.22	42.42	-3.63	0.09	13.52	13.54
5.43	1.51	-0.04	14.20	14.19	42.43	-3.18	0.08	13.58	13.60
5.44	1.30	-0.03	14.17	14.16	42.44	-2.72	0.07	13.64	13.66
5.45	1.08	-0.03	14.14	14.14	42.45	-2.27	0.06	13.70	13.72
5.46	0.86	-0.02	14.11	14.11	42.46	-1.82	0.05	13.76	13.77
5.47	0.65	-0.02	14.08	14.08	42.47	-1.36	0.03	13.82	13.83
5.48	0.43	-0.01	14.06	14.05	42.48	-0.91	0.02	13.88	13.89
5.49	0.22	-0.01	14.03	14.03	42.49	-0.45	0.01	13.94	13.94

5.5	0.00	0.00	14.00	14.00	42.5	0.00	0.00	14.00	14.00
5.51	-0.22	0.01	13.97	13.97	42.51	0.45	-0.01	14.06	14.06
5.52	-0.43	0.01	13.94	13.95	42.52	0.91	-0.02	14.12	14.11
5.53	-0.65	0.02	13.91	13.92	42.53	1.36	-0.03	14.18	14.17
5.54	-0.86	0.02	13.89	13.89	42.54	1.82	-0.05	14.24	14.23
5.55	-1.08	0.03	13.86	13.86	42.55	2.27	-0.06	14.30	14.29
5.56	-1.30	0.03	13.83	13.84	42.56	2.72	-0.07	14.36	14.34
5.57	-1.51	0.04	13.80	13.81	42.57	3.18	-0.08	14.42	14.40
5.58	-1.73	0.04	13.77	13.78	42.58	3.63	-0.09	14.48	14.46
5.59	-1.94	0.05	13.74	13.76	42.59	4.09	-0.10	14.54	14.51
5.6	-2.16	0.05	13.71	13.73	42.6	4.54	-0.11	14.60	14.57
5.61	-2.38	0.06	13.69	13.70	42.61	4.99	-0.12	14.66	14.63
5.62	-2.59	0.06	13.66	13.68	42.62	5.45	-0.14	14.72	14.68
5.63	-2.81	0.07	13.63	13.65	42.63	5.90	-0.15	14.78	14.74
5.64	-3.02	0.08	13.60	13.62	42.64	6.36	-0.16	14.84	14.80
5.65	-3.24	0.08	13.57	13.59	42.65	6.81	-0.17	14.90	14.86
5.66	-3.46	0.09	13.54	13.57	42.66	7.26	-0.18	14.96	14.91
5.67	-3.67	0.09	13.52	13.54	42.67	7.72	-0.19	15.02	14.97
5.68	-3.89	0.10	13.49	13.51	42.68	8.17	-0.20	15.08	15.03
5.69	-4.10	0.10	13.46	13.49	42.69	8.63	-0.22	15.14	15.08
5.7	-4.32	0.11	13.43	13.46	42.7	9.08	-0.23	15.20	15.14
5.71	-4.54	0.11	13.40	13.43	42.71	9.53	-0.24	15.26	15.20
5.72	-4.75	0.12	13.37	13.40	42.72	9.99	-0.25	15.32	15.26
5.73	-4.97	0.12	13.34	13.38	42.73	10.44	-0.26	15.37	15.31
5.74	-5.18	0.13	13.32	13.35	42.74	10.90	-0.27	15.44	15.37
5.75	-5.40	0.13	13.29	13.32	42.75	11.35	-0.28	15.53	15.49
5.76	-5.62	0.14	13.26	13.30	42.76	11.80	-0.30	15.69	15.71
5.77	-5.83	0.15	13.23	13.27	42.77	12.26	-0.31	15.89	16.00
5.78	-6.05	0.15	13.20	13.24	42.78	12.71	-0.33	16.13	16.35
5.79	-6.26	0.16	13.17	13.21	42.79	13.16	-0.34	16.40	16.75
5.8	-6.48	0.16	13.15	13.19	42.8	13.62	-0.36	16.68	17.18
5.81	-6.70	0.17	13.12	13.16	42.81	14.07	-0.38	16.99	17.63
5.82	-6.91	0.17	13.09	13.13	42.82	14.53	-0.40	17.30	18.10
5.83	-7.13	0.18	13.06	13.11	42.83	14.98	-0.41	17.62	18.57
5.84	-7.34	0.18	13.03	13.08	42.84	15.44	-0.43	17.95	19.07
5.85	-7.56	0.19	13.00	13.05	42.85	15.89	-0.45	18.28	19.58
5.86	-7.78	0.19	12.97	13.02	42.86	16.34	-0.47	18.62	20.09
5.87	-7.99	0.20	12.95	13.00	42.87	16.80	-0.48	18.95	20.59
5.88	-8.21	0.21	12.92	12.97	42.88	17.25	-0.50	19.29	21.11
5.89	-8.42	0.21	12.89	12.94	42.89	17.71	-0.52	19.64	21.63
5.9	-8.64	0.22	12.86	12.92	42.9	18.16	-0.54	19.99	22.16
5.91	-8.86	0.22	12.83	12.89	42.91	18.61	-0.55	20.34	22.68
5.92	-9.07	0.23	12.80	12.86	42.92	19.07	-0.57	20.69	23.21
5.93	-9.29	0.23	12.78	12.83	42.93	19.52	-0.59	21.04	23.74
5.94	-9.50	0.24	12.75	12.81	42.94	19.98	-0.61	21.39	24.26
5.95	-9.72	0.24	12.72	12.78	42.95	20.43	-0.63	21.73	24.79
5.96	-9.94	0.25	12.69	12.75	42.96	20.88	-0.64	22.09	25.33
5.97	-10.15	0.25	12.66	12.73	42.97	21.34	-0.66	22.45	25.87
5.98	-10.37	0.26	12.63	12.70	42.98	21.79	-0.68	22.80	26.41
5.99	-10.58	0.26	12.60	12.67	42.99	22.25	-0.70	23.16	26.95
6	-10.80	0.27	12.58	12.65	43	22.70	-0.72	23.52	27.49
6.01	-10.66	0.27	12.60	12.67	43.01	22.46	-0.70	23.27	27.11
6.02	-10.34	0.26	12.64	12.70	43.02	21.73	-0.68	22.77	26.36
6.03	-10.16	0.25	12.66	12.73	43.03	21.32	-0.66	22.44	25.85
6.04	-9.94	0.25	12.69	12.75	43.04	20.91	-0.65	22.10	25.35
6.05	-9.72	0.24	12.72	12.78	43.05	20.42	-0.63	21.73	24.79
6.06	-9.51	0.24	12.75	12.81	43.06	19.97	-0.61	21.38	24.26

6.07	-9.29	0.23	12.78	12.83	43.07	19.53	-0.59	21.04	23.74
6.08	-9.07	0.23	12.80	12.86	43.08	19.07	-0.57	20.69	23.21
6.09	-8.86	0.22	12.83	12.89	43.09	18.61	-0.55	20.34	22.68
6.1	-8.64	0.22	12.86	12.92	43.1	18.16	-0.54	19.99	22.16
6.11	-8.42	0.21	12.89	12.94	43.11	17.71	-0.52	19.64	21.63
6.12	-8.21	0.21	12.92	12.97	43.12	17.25	-0.50	19.29	21.11
6.13	-7.99	0.20	12.95	13.00	43.13	16.80	-0.48	18.96	20.59
6.14	-7.78	0.19	12.97	13.02	43.14	16.34	-0.47	18.62	20.09
6.15	-7.56	0.19	13.00	13.05	43.15	15.89	-0.45	18.28	19.58
6.16	-7.34	0.18	13.03	13.08	43.16	15.44	-0.43	17.95	19.07
6.17	-7.13	0.18	13.06	13.11	43.17	14.98	-0.41	17.61	18.57
6.18	-6.91	0.17	13.09	13.13	43.18	14.53	-0.40	17.30	18.10
6.19	-6.70	0.17	13.12	13.16	43.19	14.07	-0.38	16.99	17.63
6.2	-6.48	0.16	13.15	13.19	43.2	13.62	-0.36	16.68	17.17
6.21	-6.26	0.16	13.17	13.21	43.21	13.16	-0.34	16.40	16.75
6.22	-6.05	0.15	13.20	13.24	43.22	12.71	-0.33	16.13	16.35
6.23	-5.83	0.15	13.23	13.27	43.23	12.26	-0.31	15.89	16.00
6.24	-5.62	0.14	13.26	13.30	43.24	11.80	-0.30	15.69	15.70
6.25	-5.40	0.13	13.29	13.32	43.25	11.35	-0.28	15.53	15.48
6.26	-5.18	0.13	13.32	13.35	43.26	10.89	-0.27	15.44	15.38
6.27	-4.97	0.12	13.34	13.38	43.27	10.44	-0.26	15.38	15.32
6.28	-4.75	0.12	13.37	13.40	43.28	9.99	-0.25	15.32	15.26
6.29	-4.54	0.11	13.40	13.43	43.29	9.53	-0.24	15.26	15.20
6.3	-4.32	0.11	13.43	13.46	43.3	9.08	-0.23	15.20	15.14
6.31	-4.10	0.10	13.46	13.49	43.31	8.63	-0.22	15.14	15.08
6.32	-3.89	0.10	13.49	13.51	43.32	8.17	-0.20	15.08	15.03
6.33	-3.67	0.09	13.52	13.54	43.33	7.72	-0.19	15.02	14.97
6.34	-3.46	0.09	13.54	13.57	43.34	7.26	-0.18	14.96	14.91
6.35	-3.24	0.08	13.57	13.59	43.35	6.81	-0.17	14.90	14.86
6.36	-3.02	0.08	13.60	13.62	43.36	6.36	-0.16	14.84	14.80
6.37	-2.81	0.07	13.63	13.65	43.37	5.90	-0.15	14.78	14.74
6.38	-2.59	0.06	13.66	13.68	43.38	5.45	-0.14	14.72	14.68
6.39	-2.38	0.06	13.69	13.70	43.39	4.99	-0.12	14.66	14.63
6.4	-2.16	0.05	13.71	13.73	43.4	4.54	-0.11	14.60	14.57
6.41	-1.94	0.05	13.74	13.76	43.41	4.09	-0.10	14.54	14.51
6.42	-1.73	0.04	13.77	13.78	43.42	3.63	-0.09	14.48	14.46
6.43	-1.51	0.04	13.80	13.81	43.43	3.18	-0.08	14.42	14.40
6.44	-1.30	0.03	13.83	13.84	43.44	2.72	-0.07	14.36	14.34
6.45	-1.08	0.03	13.86	13.86	43.45	2.27	-0.06	14.30	14.29
6.46	-0.86	0.02	13.89	13.89	43.46	1.82	-0.05	14.24	14.23
6.47	-0.65	0.02	13.91	13.92	43.47	1.36	-0.03	14.18	14.17
6.48	-0.43	0.01	13.94	13.95	43.48	0.91	-0.02	14.12	14.11
6.49	-0.22	0.01	13.97	13.97	43.49	0.45	-0.01	14.06	14.06
6.5	0.00	0.00	14.00	14.00	43.5	0.00	0.00	14.00	14.00
6.51	0.22	-0.01	14.03	14.03	43.51	-0.45	0.01	13.94	13.94
6.52	0.43	-0.01	14.06	14.05	43.52	-0.91	0.02	13.88	13.89
6.53	0.65	-0.02	14.08	14.08	43.53	-1.36	0.03	13.82	13.83
6.54	0.86	-0.02	14.11	14.11	43.54	-1.82	0.05	13.76	13.77
6.55	1.08	-0.03	14.14	14.14	43.55	-2.27	0.06	13.70	13.72
6.56	1.30	-0.03	14.17	14.16	43.56	-2.72	0.07	13.64	13.66
6.57	1.51	-0.04	14.20	14.19	43.57	-3.18	0.08	13.58	13.60
6.58	1.73	-0.04	14.23	14.22	43.58	-3.63	0.09	13.52	13.54
6.59	1.94	-0.05	14.26	14.24	43.59	-4.09	0.10	13.46	13.49
6.6	2.16	-0.05	14.28	14.27	43.6	-4.54	0.11	13.40	13.43
6.61	2.38	-0.06	14.31	14.30	43.61	-4.99	0.12	13.34	13.37
6.62	2.59	-0.06	14.34	14.33	43.62	-5.45	0.14	13.28	13.32
6.63	2.81	-0.07	14.37	14.35	43.63	-5.90	0.15	13.22	13.26

6.64	3.02	-0.08	14.40	14.38	43.64	-6.36	0.16	13.16	13.20
6.65	3.24	-0.08	14.43	14.41	43.65	-6.81	0.17	13.10	13.15
6.66	3.46	-0.09	14.45	14.43	43.66	-7.26	0.18	13.04	13.09
6.67	3.67	-0.09	14.48	14.46	43.67	-7.72	0.19	12.98	13.03
6.68	3.89	-0.10	14.51	14.49	43.68	-8.17	0.20	12.92	12.97
6.69	4.10	-0.10	14.54	14.52	43.69	-8.63	0.22	12.86	12.92
6.7	4.32	-0.11	14.57	14.54	43.7	-9.08	0.23	12.80	12.86
6.71	4.54	-0.11	14.60	14.57	43.71	-9.53	0.24	12.74	12.80
6.72	4.75	-0.12	14.63	14.60	43.72	-9.99	0.25	12.68	12.75
6.73	4.97	-0.12	14.65	14.62	43.73	-10.44	0.26	12.62	12.69
6.74	5.18	-0.13	14.68	14.65	43.74	-10.90	0.27	12.56	12.63
6.75	5.40	-0.13	14.71	14.68	43.75	-11.35	0.28	12.50	12.57
6.76	5.62	-0.14	14.74	14.71	43.76	-11.80	0.30	12.43	12.49
6.77	5.83	-0.15	14.77	14.73	43.77	-12.26	0.31	12.35	12.40
6.78	6.05	-0.15	14.80	14.76	43.78	-12.71	0.33	12.26	12.31
6.79	6.26	-0.16	14.82	14.79	43.79	-13.16	0.34	12.18	12.21
6.8	6.48	-0.16	14.85	14.81	43.8	-13.62	0.36	12.09	12.11
6.81	6.70	-0.17	14.88	14.84	43.81	-14.07	0.38	12.00	12.01
6.82	6.91	-0.17	14.91	14.87	43.82	-14.53	0.40	11.91	11.90
6.83	7.13	-0.18	14.94	14.90	43.83	-14.98	0.41	11.83	11.80
6.84	7.34	-0.18	14.97	14.92	43.84	-15.44	0.43	11.74	11.69
6.85	7.56	-0.19	15.00	14.95	43.85	-15.89	0.45	11.65	11.59
6.86	7.78	-0.19	15.02	14.98	43.86	-16.34	0.47	11.56	11.49
6.87	7.99	-0.20	15.05	15.00	43.87	-16.80	0.48	11.47	11.38
6.88	8.21	-0.21	15.08	15.03	43.88	-17.25	0.50	11.39	11.28
6.89	8.42	-0.21	15.11	15.06	43.89	-17.71	0.52	11.30	11.17
6.9	8.64	-0.22	15.14	15.09	43.9	-18.16	0.54	11.21	11.07
6.91	8.86	-0.22	15.17	15.11	43.91	-18.61	0.55	11.13	10.97
6.92	9.07	-0.23	15.19	15.14	43.92	-19.07	0.57	11.04	10.86
6.93	9.29	-0.23	15.22	15.17	43.93	-19.52	0.59	10.95	10.76
6.94	9.50	-0.24	15.25	15.19	43.94	-19.98	0.61	10.87	10.66
6.95	9.72	-0.24	15.28	15.22	43.95	-20.43	0.63	10.78	10.55
6.96	9.94	-0.25	15.31	15.25	43.96	-20.88	0.64	10.70	10.45
6.97	10.15	-0.25	15.34	15.28	43.97	-21.34	0.66	10.61	10.35
6.98	10.37	-0.26	15.37	15.30	43.98	-21.79	0.68	10.53	10.25
6.99	10.58	-0.26	15.39	15.33	43.99	-22.25	0.70	10.44	10.15
7	10.80	-0.27	15.42	15.36	44	-22.70	0.72	10.36	10.04
7.01	10.66	-0.27	15.40	15.34	44.01	-22.43	0.70	10.42	10.12
7.02	10.34	-0.26	15.36	15.30	44.02	-21.65	0.68	10.55	10.27
7.03	10.16	-0.25	15.34	15.28	44.03	-21.20	0.66	10.63	10.38
7.04	9.94	-0.25	15.31	15.25	44.04	-20.76	0.64	10.72	10.48
7.05	9.72	-0.24	15.28	15.22	44.05	-20.23	0.62	10.82	10.60
7.06	9.51	-0.24	15.25	15.19	44.06	-19.75	0.60	10.91	10.71
7.07	9.29	-0.23	15.22	15.17	44.07	-19.26	0.58	11.00	10.82
7.08	9.07	-0.23	15.19	15.14	44.08	-18.76	0.56	11.10	10.93
7.09	8.86	-0.22	15.17	15.11	44.09	-18.27	0.54	11.19	11.04
7.1	8.64	-0.22	15.14	15.09	44.1	-17.78	0.52	11.29	11.16
7.11	8.42	-0.21	15.11	15.06	44.11	-17.29	0.50	11.38	11.27
7.12	8.21	-0.21	15.08	15.03	44.12	-16.80	0.48	11.48	11.38
7.13	7.99	-0.20	15.05	15.00	44.13	-16.30	0.46	11.57	11.49
7.14	7.78	-0.19	15.02	14.98	44.14	-15.81	0.44	11.66	11.61
7.15	7.56	-0.19	15.00	14.95	44.15	-15.32	0.43	11.76	11.72
7.16	7.34	-0.18	14.97	14.92	44.16	-14.83	0.41	11.86	11.83
7.17	7.13	-0.18	14.94	14.90	44.17	-14.34	0.39	11.95	11.95
7.18	6.91	-0.17	14.91	14.87	44.18	-13.84	0.37	12.05	12.06
7.19	6.70	-0.17	14.88	14.84	44.19	-13.35	0.35	12.14	12.17
7.2	6.48	-0.16	14.85	14.81	44.2	-12.86	0.33	12.23	12.28

7.21	6.26	-0.16	14.82	14.79	44.21	-12.37	0.32	12.33	12.38
7.22	6.05	-0.15	14.80	14.76	44.22	-11.87	0.30	12.41	12.48
7.23	5.83	-0.15	14.77	14.73	44.23	-11.38	0.29	12.49	12.56
7.24	5.62	-0.14	14.74	14.71	44.24	-10.88	0.27	12.56	12.63
7.25	5.40	-0.13	14.71	14.68	44.25	-10.40	0.26	12.63	12.69
7.26	5.18	-0.13	14.68	14.65	44.26	-9.91	0.25	12.69	12.76
7.27	4.97	-0.12	14.65	14.62	44.27	-9.42	0.24	12.76	12.82
7.28	4.75	-0.12	14.63	14.60	44.28	-8.93	0.22	12.82	12.88
7.29	4.54	-0.11	14.60	14.57	44.29	-8.43	0.21	12.89	12.94
7.3	4.32	-0.11	14.57	14.54	44.3	-7.94	0.20	12.95	13.00
7.31	4.10	-0.10	14.54	14.52	44.31	-7.45	0.19	13.02	13.07
7.32	3.89	-0.10	14.51	14.49	44.32	-6.96	0.17	13.08	13.13
7.33	3.67	-0.09	14.48	14.46	44.33	-6.46	0.16	13.15	13.19
7.34	3.46	-0.09	14.45	14.43	44.34	-5.97	0.15	13.21	13.25
7.35	3.24	-0.08	14.43	14.41	44.35	-5.48	0.14	13.28	13.31
7.36	3.02	-0.08	14.40	14.38	44.36	-4.99	0.12	13.34	13.37
7.37	2.81	-0.07	14.37	14.35	44.37	-4.50	0.11	13.41	13.44
7.38	2.59	-0.06	14.34	14.33	44.38	-4.00	0.10	13.47	13.50
7.39	2.38	-0.06	14.31	14.30	44.39	-3.51	0.09	13.54	13.56
7.4	2.16	-0.05	14.28	14.27	44.4	-3.02	0.08	13.60	13.62
7.41	1.94	-0.05	14.26	14.24	44.41	-2.53	0.06	13.67	13.68
7.42	1.73	-0.04	14.23	14.22	44.42	-2.04	0.05	13.73	13.74
7.43	1.51	-0.04	14.20	14.19	44.43	-1.54	0.04	13.80	13.81
7.44	1.30	-0.03	14.17	14.16	44.44	-1.05	0.03	13.86	13.87
7.45	1.08	-0.03	14.14	14.14	44.45	-0.56	0.01	13.93	13.93
7.46	0.86	-0.02	14.11	14.11	44.46	-0.07	0.00	13.99	13.99
7.47	0.65	-0.02	14.08	14.08	44.47	0.42	-0.01	14.06	14.05
7.48	0.43	-0.01	14.06	14.05	44.48	0.92	-0.02	14.12	14.12
7.49	0.22	-0.01	14.03	14.03	44.49	1.41	-0.04	14.18	14.18
7.5	0.00	0.00	14.00	14.00	44.5	1.90	-0.05	14.25	14.24
7.51	-0.22	0.01	13.97	13.97	44.51	2.39	-0.06	14.31	14.30
7.52	-0.43	0.01	13.94	13.95	44.52	2.88	-0.07	14.38	14.36
7.53	-0.65	0.02	13.91	13.92	44.53	3.38	-0.08	14.44	14.42
7.54	-0.86	0.02	13.89	13.89	44.54	3.87	-0.10	14.51	14.49
7.55	-1.08	0.03	13.86	13.86	44.55	4.36	-0.11	14.57	14.55
7.56	-1.30	0.03	13.83	13.84	44.56	4.85	-0.12	14.64	14.61
7.57	-1.51	0.04	13.80	13.81	44.57	5.34	-0.13	14.70	14.67
7.58	-1.73	0.04	13.77	13.78	44.58	5.84	-0.15	14.77	14.73
7.59	-1.94	0.05	13.74	13.76	44.59	6.33	-0.16	14.83	14.80
7.6	-2.16	0.05	13.71	13.73	44.6	6.82	-0.17	14.90	14.86
7.61	-2.38	0.06	13.69	13.70	44.61	7.31	-0.18	14.96	14.92
7.62	-2.59	0.06	13.66	13.68	44.62	7.80	-0.19	15.03	14.98
7.63	-2.81	0.07	13.63	13.65	44.63	8.30	-0.21	15.09	15.04
7.64	-3.02	0.08	13.60	13.62	44.64	8.79	-0.22	15.16	15.10
7.65	-3.24	0.08	13.57	13.59	44.65	9.28	-0.23	15.22	15.17
7.66	-3.46	0.09	13.54	13.57	44.66	9.77	-0.24	15.29	15.23
7.67	-3.67	0.09	13.52	13.54	44.67	10.26	-0.26	15.35	15.29
7.68	-3.89	0.10	13.49	13.51	44.68	10.76	-0.27	15.42	15.35
7.69	-4.10	0.10	13.46	13.49	44.69	11.25	-0.28	15.51	15.46
7.7	-4.32	0.11	13.43	13.46	44.7	11.73	-0.30	15.67	15.67
7.71	-4.54	0.11	13.40	13.43	44.71	12.23	-0.31	15.88	15.99
7.72	-4.75	0.12	13.37	13.40	44.72	12.72	-0.33	16.14	16.36
7.73	-4.97	0.12	13.34	13.38	44.73	13.21	-0.35	16.43	16.80
7.74	-5.18	0.13	13.32	13.35	44.74	13.71	-0.36	16.74	17.26
7.75	-5.40	0.13	13.29	13.32	44.75	14.20	-0.38	17.07	17.76
7.76	-5.62	0.14	13.26	13.30	44.76	14.69	-0.40	17.41	18.26
7.77	-5.83	0.15	13.23	13.27	44.77	15.18	-0.42	17.76	18.80

7.78	-6.05	0.15	13.20	13.24	44.78	15.68	-0.44	18.13	19.34
7.79	-6.26	0.16	13.17	13.21	44.79	16.17	-0.46	18.49	19.89
7.8	-6.48	0.16	13.15	13.19	44.8	16.66	-0.48	18.85	20.44
7.81	-6.70	0.17	13.12	13.16	44.81	17.15	-0.50	19.22	20.99
7.82	-6.91	0.17	13.09	13.13	44.82	17.64	-0.52	19.59	21.56
7.83	-7.13	0.18	13.06	13.11	44.83	18.14	-0.54	19.97	22.13
7.84	-7.34	0.18	13.03	13.08	44.84	18.63	-0.56	20.35	22.70
7.85	-7.56	0.19	13.00	13.05	44.85	19.12	-0.57	20.73	23.27
7.86	-7.78	0.19	12.97	13.02	44.86	19.61	-0.59	21.11	23.84
7.87	-7.99	0.20	12.95	13.00	44.87	20.10	-0.61	21.48	24.41
7.88	-8.21	0.21	12.92	12.97	44.88	20.60	-0.63	21.86	24.99
7.89	-8.42	0.21	12.89	12.94	44.89	21.09	-0.65	22.25	25.57
7.9	-8.64	0.22	12.86	12.92	44.9	21.58	-0.67	22.64	26.15
7.91	-8.86	0.22	12.83	12.89	44.91	22.07	-0.69	23.02	26.74
7.92	-9.07	0.23	12.80	12.86	44.92	22.56	-0.71	23.41	27.32
7.93	-9.29	0.23	12.78	12.83	44.93	23.04	-0.73	23.94	27.68
7.94	-9.50	0.24	12.75	12.81	44.94	23.53	-0.76	24.70	27.78
7.95	-9.72	0.24	12.72	12.78	44.95	24.04	-0.79	25.53	27.80
7.96	-9.94	0.25	12.69	12.75	44.96	24.53	-0.82	26.35	27.81
7.97	-10.15	0.25	12.66	12.73	44.97	25.02	-0.85	27.17	27.82
7.98	-10.37	0.26	12.63	12.70	44.98	25.43	-0.89	27.65	27.83
7.99	-10.58	0.26	12.60	12.67	44.99	25.87	-0.97	27.78	27.85
8	-10.80	0.27	12.58	12.65	45	26.44	-1.08	27.82	27.88
8.01	-10.66	0.27	12.60	12.67	45.01	26.65	-1.08	27.83	27.88
8.02	-10.34	0.26	12.64	12.70	45.02	25.27	-1.03	26.89	26.45
8.03	-10.16	0.25	12.66	12.73	45.03	24.78	-1.01	26.56	25.94
8.04	-9.94	0.25	12.69	12.75	45.04	24.47	-1.00	26.20	25.40
8.05	-9.72	0.24	12.72	12.78	45.05	23.77	-0.97	25.72	24.68
8.06	-9.51	0.24	12.75	12.81	45.06	23.27	-0.95	25.30	24.04
8.07	-9.29	0.23	12.78	12.83	45.07	22.75	-0.93	24.88	23.41
8.08	-9.07	0.23	12.80	12.86	45.08	22.20	-0.91	24.45	22.75
8.09	-8.86	0.22	12.83	12.89	45.09	21.66	-0.89	24.02	22.11
8.1	-8.64	0.22	12.86	12.92	45.1	21.13	-0.87	23.60	21.47
8.11	-8.42	0.21	12.89	12.94	45.11	20.59	-0.84	23.17	20.82
8.12	-8.21	0.21	12.92	12.97	45.12	20.05	-0.82	22.74	20.17
8.13	-7.99	0.20	12.95	13.00	45.13	19.51	-0.80	22.32	19.53
8.14	-7.78	0.19	12.97	13.02	45.14	18.97	-0.78	21.89	18.88
8.15	-7.56	0.19	13.00	13.05	45.15	18.44	-0.76	21.46	18.24
8.16	-7.34	0.18	13.03	13.08	45.16	17.90	-0.74	21.04	17.59
8.17	-7.13	0.18	13.06	13.11	45.17	17.36	-0.72	20.61	16.95
8.18	-6.91	0.17	13.09	13.13	45.18	16.82	-0.69	20.18	16.30
8.19	-6.70	0.17	13.12	13.16	45.19	16.29	-0.67	19.76	15.65
8.2	-6.48	0.16	13.15	13.19	45.2	15.75	-0.65	19.33	15.01
8.21	-6.26	0.16	13.17	13.21	45.21	15.21	-0.63	18.90	14.36
8.22	-6.05	0.15	13.20	13.24	45.22	14.67	-0.61	18.48	13.72
8.23	-5.83	0.15	13.23	13.27	45.23	14.14	-0.59	18.05	13.07
8.24	-5.62	0.14	13.26	13.30	45.24	13.60	-0.57	17.62	12.43
8.25	-5.40	0.13	13.29	13.32	45.25	13.06	-0.54	17.19	11.78
8.26	-5.18	0.13	13.32	13.35	45.26	12.52	-0.52	16.77	11.14
8.27	-4.97	0.12	13.34	13.38	45.27	11.99	-0.50	16.34	10.49
8.28	-4.75	0.12	13.37	13.40	45.28	11.45	-0.48	15.91	9.84
8.29	-4.54	0.11	13.40	13.43	45.29	10.91	-0.46	15.49	9.20
8.3	-4.32	0.11	13.43	13.46	45.3	10.37	-0.44	15.06	8.56
8.31	-4.10	0.10	13.46	13.49	45.31	9.83	-0.42	14.64	7.92
8.32	-3.89	0.10	13.49	13.51	45.32	9.30	-0.39	14.22	7.28
8.33	-3.67	0.09	13.52	13.54	45.33	8.76	-0.37	13.80	6.64
8.34	-3.46	0.09	13.54	13.57	45.34	8.22	-0.35	13.37	6.00

8.35	-3.24	0.08	13.57	13.59	45.35	7.68	-0.33	12.95	5.36
8.36	-3.02	0.08	13.60	13.62	45.36	7.15	-0.31	12.53	4.73
8.37	-2.81	0.07	13.63	13.65	45.37	6.61	-0.29	12.11	4.09
8.38	-2.59	0.06	13.66	13.68	45.38	6.07	-0.27	11.68	3.45
8.39	-2.38	0.06	13.69	13.70	45.39	5.53	-0.24	11.26	2.81
8.4	-2.16	0.05	13.71	13.73	45.4	5.00	-0.22	10.84	2.17
8.41	-1.94	0.05	13.74	13.76	45.41	4.46	-0.20	10.42	1.54
8.42	-1.73	0.04	13.77	13.78	45.42	3.92	-0.18	10.01	0.92
8.43	-1.51	0.04	13.80	13.81	45.43	3.38	-0.16	9.60	0.29
8.44	-1.30	0.03	13.83	13.84	45.44	2.87	-0.13	8.96	0.07
8.45	-1.08	0.03	13.86	13.86	45.45	2.31	-0.10	8.21	0.02
8.46	-0.86	0.02	13.89	13.89	45.46	1.75	-0.08	7.58	0.00
8.47	-0.65	0.02	13.91	13.92	45.47	1.22	-0.06	7.17	0.00
8.48	-0.43	0.01	13.94	13.95	45.48	0.67	-0.04	7.01	0.00
8.49	-0.22	0.01	13.97	13.97	45.49	0.16	-0.03	6.91	0.00
8.5	0.00	0.00	14.00	14.00	45.5	-0.38	-0.01	6.83	0.00
8.51	0.22	-0.01	14.03	14.03	45.51	-0.92	0.00	6.76	0.00
8.52	0.43	-0.01	14.06	14.05	45.52	-1.45	0.01	6.68	0.00
8.53	0.65	-0.02	14.08	14.08	45.53	-1.99	0.03	6.61	0.00
8.54	0.86	-0.02	14.11	14.11	45.54	-2.53	0.04	6.54	0.00
8.55	1.08	-0.03	14.14	14.14	45.55	-3.07	0.05	6.46	0.00
8.56	1.30	-0.03	14.17	14.16	45.56	-3.61	0.07	6.39	0.00
8.57	1.51	-0.04	14.20	14.19	45.57	-4.14	0.08	6.32	0.00
8.58	1.73	-0.04	14.23	14.22	45.58	-4.68	0.09	6.24	0.00
8.59	1.94	-0.05	14.26	14.24	45.59	-5.22	0.11	6.17	0.00
8.6	2.16	-0.05	14.28	14.27	45.6	-5.76	0.12	6.09	0.00
8.61	2.38	-0.06	14.31	14.30	45.61	-6.29	0.13	6.02	0.00
8.62	2.59	-0.06	14.34	14.33	45.62	-6.83	0.15	5.95	0.00
8.63	2.81	-0.07	14.37	14.35	45.63	-7.37	0.16	5.87	0.00
8.64	3.02	-0.08	14.40	14.38	45.64	-7.91	0.18	5.80	0.00
8.65	3.24	-0.08	14.43	14.41	45.65	-8.44	0.19	5.73	0.00
8.66	3.46	-0.09	14.45	14.43	45.66	-8.98	0.20	5.65	0.00
8.67	3.67	-0.09	14.48	14.46	45.67	-9.52	0.22	5.58	0.00
8.68	3.89	-0.10	14.51	14.49	45.68	-10.06	0.23	5.50	0.00
8.69	4.10	-0.10	14.54	14.52	45.69	-10.59	0.24	5.43	0.00
8.7	4.32	-0.11	14.57	14.54	45.7	-11.13	0.26	5.36	0.00
8.71	4.54	-0.11	14.60	14.57	45.71	-11.67	0.27	5.28	0.00
8.72	4.75	-0.12	14.63	14.60	45.72	-12.21	0.28	5.21	0.00
8.73	4.97	-0.12	14.65	14.62	45.73	-12.74	0.30	5.13	0.00
8.74	5.18	-0.13	14.68	14.65	45.74	-13.27	0.31	5.03	0.00
8.75	5.40	-0.13	14.71	14.68	45.75	-13.82	0.33	4.93	0.00
8.76	5.62	-0.14	14.74	14.71	45.76	-14.35	0.35	4.82	0.00
8.77	5.83	-0.15	14.77	14.73	45.77	-14.89	0.37	4.71	0.00
8.78	6.05	-0.15	14.80	14.76	45.78	-15.43	0.39	4.60	0.00
8.79	6.26	-0.16	14.82	14.79	45.79	-15.97	0.42	4.49	0.00
8.8	6.48	-0.16	14.85	14.81	45.8	-16.51	0.44	4.38	0.00
8.81	6.70	-0.17	14.88	14.84	45.81	-17.05	0.46	4.27	0.00
8.82	6.91	-0.17	14.91	14.87	45.82	-17.58	0.48	4.16	0.00
8.83	7.13	-0.18	14.94	14.90	45.83	-18.12	0.50	4.06	0.00
8.84	7.34	-0.18	14.97	14.92	45.84	-18.66	0.52	3.95	0.00
8.85	7.56	-0.19	15.00	14.95	45.85	-19.20	0.54	3.84	0.00
8.86	7.78	-0.19	15.02	14.98	45.86	-19.73	0.57	3.74	0.00
8.87	7.99	-0.20	15.05	15.00	45.87	-20.27	0.59	3.63	0.00
8.88	8.21	-0.21	15.08	15.03	45.88	-20.81	0.61	3.52	0.00
8.89	8.42	-0.21	15.11	15.06	45.89	-21.35	0.63	3.42	0.00
8.9	8.64	-0.22	15.14	15.09	45.9	-21.88	0.65	3.31	0.00
8.91	8.86	-0.22	15.17	15.11	45.91	-22.42	0.67	3.20	0.00

8.92	9.07	-0.23	15.19	15.14	45.92	-22.96	0.70	3.10	0.00
8.93	9.29	-0.23	15.22	15.17	45.93	-23.50	0.72	2.99	0.00
8.94	9.50	-0.24	15.25	15.19	45.94	-24.01	0.74	2.86	0.00
8.95	9.72	-0.24	15.28	15.22	45.95	-24.55	0.77	2.71	0.00
8.96	9.94	-0.25	15.31	15.25	45.96	-25.11	0.81	2.56	0.00
8.97	10.15	-0.25	15.34	15.28	45.97	-25.65	0.84	2.41	0.00
8.98	10.37	-0.26	15.37	15.30	45.98	-26.13	0.88	2.21	0.00
8.99	10.58	-0.26	15.39	15.33	45.99	-26.55	0.96	1.85	0.00
9	10.80	-0.27	15.42	15.36	46	-27.14	1.08	1.30	0.00
9.01	10.66	-0.27	15.40	15.34	46.01	-27.44	1.09	1.25	0.00
9.02	10.34	-0.26	15.36	15.30	46.02	-26.06	1.04	1.47	0.00
9.03	10.16	-0.25	15.34	15.28	46.03	-25.50	1.02	1.57	0.00
9.04	9.94	-0.25	15.31	15.25	46.04	-25.20	1.01	1.65	0.00
9.05	9.72	-0.24	15.28	15.22	46.05	-24.51	0.98	1.77	0.00
9.06	9.51	-0.24	15.25	15.19	46.06	-23.99	0.96	1.88	0.00
9.07	9.29	-0.23	15.22	15.17	46.07	-23.47	0.94	1.98	0.00
9.08	9.07	-0.23	15.19	15.14	46.08	-22.91	0.92	2.09	0.00
9.09	8.86	-0.22	15.17	15.11	46.09	-22.37	0.89	2.19	0.00
9.1	8.64	-0.22	15.14	15.09	46.1	-21.83	0.87	2.30	0.00
9.11	8.42	-0.21	15.11	15.06	46.11	-21.28	0.85	2.40	0.00
9.12	8.21	-0.21	15.08	15.03	46.12	-20.74	0.83	2.51	0.00
9.13	7.99	-0.20	15.05	15.00	46.13	-20.19	0.81	2.62	0.00
9.14	7.78	-0.19	15.02	14.98	46.14	-19.65	0.78	2.72	0.00
9.15	7.56	-0.19	15.00	14.95	46.15	-19.11	0.76	2.83	0.00
9.16	7.34	-0.18	14.97	14.92	46.16	-18.56	0.74	2.93	0.00
9.17	7.13	-0.18	14.94	14.90	46.17	-18.02	0.72	3.04	0.00
9.18	6.91	-0.17	14.91	14.87	46.18	-17.48	0.70	3.15	0.00
9.19	6.70	-0.17	14.88	14.84	46.19	-16.93	0.68	3.25	0.00
9.2	6.48	-0.16	14.85	14.81	46.2	-16.39	0.65	3.36	0.00
9.21	6.26	-0.16	14.82	14.79	46.21	-15.84	0.63	3.46	0.00
9.22	6.05	-0.15	14.80	14.76	46.22	-15.30	0.61	3.57	0.00
9.23	5.83	-0.15	14.77	14.73	46.23	-14.76	0.59	3.67	0.00
9.24	5.62	-0.14	14.74	14.71	46.24	-14.21	0.57	3.78	0.00
9.25	5.40	-0.13	14.71	14.68	46.25	-13.67	0.54	3.89	0.00
9.26	5.18	-0.13	14.68	14.65	46.26	-13.13	0.52	3.99	0.00
9.27	4.97	-0.12	14.65	14.62	46.27	-12.58	0.50	4.10	0.00
9.28	4.75	-0.12	14.63	14.60	46.28	-12.04	0.48	4.20	0.00
9.29	4.54	-0.11	14.60	14.57	46.29	-11.50	0.46	4.31	0.00
9.3	4.32	-0.11	14.57	14.54	46.3	-10.95	0.43	4.42	0.00
9.31	4.10	-0.10	14.54	14.52	46.31	-10.41	0.41	4.52	0.00
9.32	3.89	-0.10	14.51	14.49	46.32	-9.87	0.39	4.63	0.00
9.33	3.67	-0.09	14.48	14.46	46.33	-9.32	0.37	4.73	0.00
9.34	3.46	-0.09	14.45	14.43	46.34	-8.78	0.35	4.84	0.00
9.35	3.24	-0.08	14.43	14.41	46.35	-8.23	0.33	4.94	0.00
9.36	3.02	-0.08	14.40	14.38	46.36	-7.69	0.30	5.05	0.00
9.37	2.81	-0.07	14.37	14.35	46.37	-7.15	0.28	5.16	0.00
9.38	2.59	-0.06	14.34	14.33	46.38	-6.60	0.26	5.26	0.00
9.39	2.38	-0.06	14.31	14.30	46.39	-6.06	0.24	5.37	0.00
9.4	2.16	-0.05	14.28	14.27	46.4	-5.52	0.22	5.47	0.00
9.41	1.94	-0.05	14.26	14.24	46.41	-4.97	0.19	5.58	0.00
9.42	1.73	-0.04	14.23	14.22	46.42	-4.43	0.17	5.69	0.00
9.43	1.51	-0.04	14.20	14.19	46.43	-3.92	0.14	5.82	0.00
9.44	1.30	-0.03	14.17	14.16	46.44	-3.35	0.11	5.99	0.00
9.45	1.08	-0.03	14.14	14.14	46.45	-2.78	0.08	6.15	0.00
9.46	0.86	-0.02	14.11	14.11	46.46	-2.22	0.06	6.26	0.00
9.47	0.65	-0.02	14.08	14.08	46.47	-1.70	0.04	6.34	0.00
9.48	0.43	-0.01	14.06	14.05	46.48	-1.17	0.03	6.42	0.00

9.49	0.22	-0.01	14.03	14.03	46.49	-0.62	0.02	6.50	0.00
9.5	0.00	0.00	14.00	14.00	46.5	-0.08	0.00	6.57	0.00
9.51	-0.22	0.01	13.97	13.97	46.51	0.46	-0.01	6.65	0.00
9.52	-0.43	0.01	13.94	13.95	46.52	1.01	-0.02	6.72	0.00
9.53	-0.65	0.02	13.91	13.92	46.53	1.55	-0.04	6.80	0.00
9.54	-0.86	0.02	13.89	13.89	46.54	2.09	-0.05	6.87	0.00
9.55	-1.08	0.03	13.86	13.86	46.55	2.62	-0.07	7.09	0.00
9.56	-1.30	0.03	13.83	13.84	46.56	3.14	-0.09	7.68	0.00
9.57	-1.51	0.04	13.80	13.81	46.57	3.71	-0.13	8.55	0.00
9.58	-1.73	0.04	13.77	13.78	46.58	4.29	-0.16	9.32	0.23
9.59	-1.94	0.05	13.74	13.76	46.59	4.83	-0.18	9.84	0.77
9.6	-2.16	0.05	13.71	13.73	46.6	5.35	-0.20	10.28	1.38
9.61	-2.38	0.06	13.69	13.70	46.61	5.90	-0.22	10.72	2.04
9.62	-2.59	0.06	13.66	13.68	46.62	6.45	-0.25	11.16	2.70
9.63	-2.81	0.07	13.63	13.65	46.63	6.99	-0.27	11.59	3.35
9.64	-3.02	0.08	13.60	13.62	46.64	7.53	-0.29	12.03	4.01
9.65	-3.24	0.08	13.57	13.59	46.65	8.07	-0.31	12.47	4.67
9.66	-3.46	0.09	13.54	13.57	46.66	8.62	-0.33	12.90	5.33
9.67	-3.67	0.09	13.52	13.54	46.67	9.16	-0.35	13.34	5.99
9.68	-3.89	0.10	13.49	13.51	46.68	9.71	-0.38	13.77	6.65
9.69	-4.10	0.10	13.46	13.49	46.69	10.25	-0.40	14.21	7.31
9.7	-4.32	0.11	13.43	13.46	46.7	10.79	-0.42	14.65	7.97
9.71	-4.54	0.11	13.40	13.43	46.71	11.34	-0.44	15.08	8.63
9.72	-4.75	0.12	13.37	13.40	46.72	11.88	-0.46	15.52	9.29
9.73	-4.97	0.12	13.34	13.38	46.73	12.42	-0.49	15.95	9.95
9.74	-5.18	0.13	13.32	13.35	46.74	12.97	-0.51	16.39	10.61
9.75	-5.40	0.13	13.29	13.32	46.75	13.51	-0.53	16.82	11.27
9.76	-5.62	0.14	13.26	13.30	46.76	14.05	-0.55	17.26	11.93
9.77	-5.83	0.15	13.23	13.27	46.77	14.60	-0.57	17.70	12.59
9.78	-6.05	0.15	13.20	13.24	46.78	15.14	-0.60	18.13	13.25
9.79	-6.26	0.16	13.17	13.21	46.79	15.68	-0.62	18.57	13.91
9.8	-6.48	0.16	13.15	13.19	46.8	16.23	-0.64	19.00	14.57
9.81	-6.70	0.17	13.12	13.16	46.81	16.77	-0.66	19.44	15.23
9.82	-6.91	0.17	13.09	13.13	46.82	17.32	-0.68	19.87	15.89
9.83	-7.13	0.18	13.06	13.11	46.83	17.86	-0.70	20.31	16.55
9.84	-7.34	0.18	13.03	13.08	46.84	18.40	-0.73	20.75	17.21
9.85	-7.56	0.19	13.00	13.05	46.85	18.95	-0.75	21.18	17.87
9.86	-7.78	0.19	12.97	13.02	46.86	19.49	-0.77	21.62	18.53
9.87	-7.99	0.20	12.95	13.00	46.87	20.03	-0.79	22.05	19.18
9.88	-8.21	0.21	12.92	12.97	46.88	20.58	-0.81	22.49	19.84
9.89	-8.42	0.21	12.89	12.94	46.89	21.12	-0.84	22.92	20.50
9.9	-8.64	0.22	12.86	12.92	46.9	21.66	-0.86	23.36	21.16
9.91	-8.86	0.22	12.83	12.89	46.91	22.21	-0.88	23.80	21.82
9.92	-9.07	0.23	12.80	12.86	46.92	22.75	-0.90	24.23	22.48
9.93	-9.29	0.23	12.78	12.83	46.93	23.30	-0.92	24.67	23.14
9.94	-9.50	0.24	12.75	12.81	46.94	23.84	-0.94	25.10	23.80
9.95	-9.72	0.24	12.72	12.78	46.95	24.38	-0.97	25.54	24.46
9.96	-9.94	0.25	12.69	12.75	46.96	24.93	-0.99	25.97	25.12
9.97	-10.15	0.25	12.66	12.73	46.97	25.47	-1.01	26.41	25.78
9.98	-10.37	0.26	12.63	12.70	46.98	26.01	-1.03	26.85	26.44
9.99	-10.58	0.26	12.60	12.67	46.99	26.56	-1.05	27.28	27.10
10	-10.80	0.27	12.58	12.65	47	27.08	-1.08	27.70	27.68
10.01	-10.66	0.27	12.60	12.67	47.01	26.85	-1.07	27.44	27.29
10.02	-10.34	0.26	12.64	12.70	47.02	25.94	-1.03	26.81	26.33
10.03	-10.16	0.25	12.66	12.73	47.03	25.44	-1.01	26.41	25.72
10.04	-9.94	0.25	12.69	12.75	47.04	24.98	-0.99	26.01	25.11
10.05	-9.72	0.24	12.72	12.78	47.05	24.38	-0.97	25.55	24.42

10.06	-9.51	0.24	12.75	12.81	47.06	23.85	-0.95	25.12	23.77
10.07	-9.29	0.23	12.78	12.83	47.07	23.32	-0.93	24.69	23.12
10.08	-9.07	0.23	12.80	12.86	47.08	22.77	-0.91	24.25	22.46
10.09	-8.86	0.22	12.83	12.89	47.09	22.23	-0.88	23.82	21.80
10.1	-8.64	0.22	12.86	12.92	47.1	21.69	-0.86	23.39	21.15
10.11	-8.42	0.21	12.89	12.94	47.11	21.15	-0.84	22.95	20.49
10.12	-8.21	0.21	12.92	12.97	47.12	20.61	-0.82	22.52	19.83
10.13	-7.99	0.20	12.95	13.00	47.13	20.07	-0.80	22.08	19.18
10.14	-7.78	0.19	12.97	13.02	47.14	19.53	-0.78	21.65	18.52
10.15	-7.56	0.19	13.00	13.05	47.15	18.99	-0.75	21.22	17.87
10.16	-7.34	0.18	13.03	13.08	47.16	18.44	-0.73	20.78	17.21
10.17	-7.13	0.18	13.06	13.11	47.17	17.90	-0.71	20.35	16.55
10.18	-6.91	0.17	13.09	13.13	47.18	17.36	-0.69	19.92	15.90
10.19	-6.70	0.17	13.12	13.16	47.19	16.82	-0.67	19.48	15.24
10.2	-6.48	0.16	13.15	13.19	47.2	16.28	-0.64	19.05	14.58
10.21	-6.26	0.16	13.17	13.21	47.21	15.74	-0.62	18.61	13.93
10.22	-6.05	0.15	13.20	13.24	47.22	15.20	-0.60	18.18	13.27
10.23	-5.83	0.15	13.23	13.27	47.23	14.66	-0.58	17.75	12.61
10.24	-5.62	0.14	13.26	13.30	47.24	14.12	-0.56	17.31	11.96
10.25	-5.40	0.13	13.29	13.32	47.25	13.58	-0.54	16.88	11.30
10.26	-5.18	0.13	13.32	13.35	47.26	13.03	-0.51	16.45	10.64
10.27	-4.97	0.12	13.34	13.38	47.27	12.49	-0.49	16.01	9.99
10.28	-4.75	0.12	13.37	13.40	47.28	11.95	-0.47	15.58	9.33
10.29	-4.54	0.11	13.40	13.43	47.29	11.41	-0.45	15.15	8.68
10.3	-4.32	0.11	13.43	13.46	47.3	10.87	-0.43	14.71	8.02
10.31	-4.10	0.10	13.46	13.49	47.31	10.33	-0.41	14.28	7.36
10.32	-3.89	0.10	13.49	13.51	47.32	9.79	-0.38	13.84	6.71
10.33	-3.67	0.09	13.52	13.54	47.33	9.25	-0.36	13.41	6.05
10.34	-3.46	0.09	13.54	13.57	47.34	8.71	-0.34	12.98	5.39
10.35	-3.24	0.08	13.57	13.59	47.35	8.17	-0.32	12.54	4.74
10.36	-3.02	0.08	13.60	13.62	47.36	7.62	-0.30	12.11	4.08
10.37	-2.81	0.07	13.63	13.65	47.37	7.08	-0.27	11.68	3.42
10.38	-2.59	0.06	13.66	13.68	47.38	6.54	-0.25	11.24	2.77
10.39	-2.38	0.06	13.69	13.70	47.39	6.00	-0.23	10.81	2.11
10.4	-2.16	0.05	13.71	13.73	47.4	5.46	-0.21	10.38	1.46
10.41	-1.94	0.05	13.74	13.76	47.41	4.92	-0.19	9.94	0.80
10.42	-1.73	0.04	13.77	13.78	47.42	4.38	-0.17	9.47	0.20
10.43	-1.51	0.04	13.80	13.81	47.43	3.87	-0.14	8.69	0.05
10.44	-1.30	0.03	13.83	13.84	47.44	3.30	-0.10	7.79	0.01
10.45	-1.08	0.03	13.86	13.86	47.45	2.73	-0.07	7.08	0.00
10.46	-0.86	0.02	13.89	13.89	47.46	2.18	-0.06	6.80	0.00
10.47	-0.65	0.02	13.91	13.92	47.47	1.67	-0.04	6.68	0.00
10.48	-0.43	0.01	13.94	13.95	47.48	1.13	-0.03	6.59	0.00
10.49	-0.22	0.01	13.97	13.97	47.49	0.59	-0.01	6.51	0.00
10.5	0.00	0.00	14.00	14.00	47.5	0.05	0.00	6.44	0.00
10.51	0.22	-0.01	14.03	14.03	47.51	-0.49	0.01	6.36	0.00
10.52	0.43	-0.01	14.06	14.05	47.52	-1.03	0.03	6.29	0.00
10.53	0.65	-0.02	14.08	14.08	47.53	-1.57	0.04	6.21	0.00
10.54	0.86	-0.02	14.11	14.11	47.54	-2.11	0.05	6.14	0.00
10.55	1.08	-0.03	14.14	14.14	47.55	-2.62	0.07	6.03	0.00
10.56	1.30	-0.03	14.17	14.16	47.56	-3.16	0.10	5.88	0.00
10.57	1.51	-0.04	14.20	14.19	47.57	-3.73	0.13	5.72	0.00
10.58	1.73	-0.04	14.23	14.22	47.58	-4.29	0.16	5.57	0.00
10.59	1.94	-0.05	14.26	14.24	47.59	-4.84	0.19	5.46	0.00
10.6	2.16	-0.05	14.28	14.27	47.6	-5.36	0.21	5.35	0.00
10.61	2.38	-0.06	14.31	14.30	47.61	-5.90	0.23	5.25	0.00
10.62	2.59	-0.06	14.34	14.33	47.62	-6.45	0.25	5.14	0.00

10.63	2.81	-0.07	14.37	14.35	47.63	-6.98	0.27	5.03	0.00
10.64	3.02	-0.08	14.40	14.38	47.64	-7.52	0.30	4.93	0.00
10.65	3.24	-0.08	14.43	14.41	47.65	-8.07	0.32	4.82	0.00
10.66	3.46	-0.09	14.45	14.43	47.66	-8.61	0.34	4.72	0.00
10.67	3.67	-0.09	14.48	14.46	47.67	-9.15	0.36	4.61	0.00
10.68	3.89	-0.10	14.51	14.49	47.68	-9.69	0.38	4.51	0.00
10.69	4.10	-0.10	14.54	14.52	47.69	-10.23	0.41	4.40	0.00
10.7	4.32	-0.11	14.57	14.54	47.7	-10.77	0.43	4.30	0.00
10.71	4.54	-0.11	14.60	14.57	47.71	-11.31	0.45	4.19	0.00
10.72	4.75	-0.12	14.63	14.60	47.72	-11.85	0.47	4.09	0.00
10.73	4.97	-0.12	14.65	14.62	47.73	-12.39	0.49	3.98	0.00
10.74	5.18	-0.13	14.68	14.65	47.74	-12.93	0.51	3.88	0.00
10.75	5.40	-0.13	14.71	14.68	47.75	-13.48	0.54	3.77	0.00
10.76	5.62	-0.14	14.74	14.71	47.76	-14.02	0.56	3.67	0.00
10.77	5.83	-0.15	14.77	14.73	47.77	-14.56	0.58	3.56	0.00
10.78	6.05	-0.15	14.80	14.76	47.78	-15.10	0.60	3.45	0.00
10.79	6.26	-0.16	14.82	14.79	47.79	-15.64	0.62	3.35	0.00
10.8	6.48	-0.16	14.85	14.81	47.8	-16.18	0.64	3.24	0.00
10.81	6.70	-0.17	14.88	14.84	47.81	-16.72	0.67	3.14	0.00
10.82	6.91	-0.17	14.91	14.87	47.82	-17.26	0.69	3.03	0.00
10.83	7.13	-0.18	14.94	14.90	47.83	-17.80	0.71	2.93	0.00
10.84	7.34	-0.18	14.97	14.92	47.84	-18.34	0.73	2.82	0.00
10.85	7.56	-0.19	15.00	14.95	47.85	-18.89	0.75	2.72	0.00
10.86	7.78	-0.19	15.02	14.98	47.86	-19.43	0.77	2.61	0.00
10.87	7.99	-0.20	15.05	15.00	47.87	-19.97	0.80	2.51	0.00
10.88	8.21	-0.21	15.08	15.03	47.88	-20.51	0.82	2.40	0.00
10.89	8.42	-0.21	15.11	15.06	47.89	-21.05	0.84	2.30	0.00
10.9	8.64	-0.22	15.14	15.09	47.9	-21.59	0.86	2.19	0.00
10.91	8.86	-0.22	15.17	15.11	47.91	-22.13	0.88	2.08	0.00
10.92	9.07	-0.23	15.19	15.14	47.92	-22.67	0.91	1.98	0.00
10.93	9.29	-0.23	15.22	15.17	47.93	-23.21	0.93	1.87	0.00
10.94	9.50	-0.24	15.25	15.19	47.94	-23.75	0.95	1.77	0.00
10.95	9.72	-0.24	15.28	15.22	47.95	-24.30	0.97	1.66	0.00
10.96	9.94	-0.25	15.31	15.25	47.96	-24.84	0.99	1.56	0.00
10.97	10.15	-0.25	15.34	15.28	47.97	-25.38	1.01	1.45	0.00
10.98	10.37	-0.26	15.37	15.30	47.98	-25.92	1.04	1.35	0.00
10.99	10.58	-0.26	15.39	15.33	47.99	-26.46	1.06	1.24	0.00
11	10.80	-0.27	15.42	15.36	48	-27.00	1.08	1.14	0.00
11.01	10.66	-0.27	15.40	15.34	48.01	-26.70	1.06	1.21	0.00
11.02	10.34	-0.26	15.36	15.30	48.02	-25.81	1.03	1.36	0.00
11.03	10.16	-0.25	15.34	15.28	48.03	-25.30	1.01	1.47	0.00
11.04	9.94	-0.25	15.31	15.25	48.04	-24.80	0.99	1.57	0.00
11.05	9.72	-0.24	15.28	15.22	48.05	-24.19	0.97	1.68	0.00
11.06	9.51	-0.24	15.25	15.19	48.06	-23.64	0.94	1.79	0.00
11.07	9.29	-0.23	15.22	15.17	48.07	-23.09	0.92	1.90	0.00
11.08	9.07	-0.23	15.19	15.14	48.08	-22.53	0.90	2.01	0.00
11.09	8.86	-0.22	15.17	15.11	48.09	-21.97	0.88	2.12	0.00
11.1	8.64	-0.22	15.14	15.09	48.1	-21.41	0.85	2.23	0.00
11.11	8.42	-0.21	15.11	15.06	48.11	-20.85	0.83	2.33	0.00
11.12	8.21	-0.21	15.08	15.03	48.12	-20.29	0.81	2.44	0.00
11.13	7.99	-0.20	15.05	15.00	48.13	-19.73	0.79	2.55	0.00
11.14	7.78	-0.19	15.02	14.98	48.14	-19.17	0.76	2.66	0.00
11.15	7.56	-0.19	15.00	14.95	48.15	-18.62	0.74	2.77	0.00
11.16	7.34	-0.18	14.97	14.92	48.16	-18.06	0.72	2.88	0.00
11.17	7.13	-0.18	14.94	14.90	48.17	-17.50	0.70	2.99	0.00
11.18	6.91	-0.17	14.91	14.87	48.18	-16.94	0.67	3.10	0.00
11.19	6.70	-0.17	14.88	14.84	48.19	-16.38	0.65	3.20	0.00

11.2	6.48	-0.16	14.85	14.81	48.2	-15.82	0.63	3.31	0.00
11.21	6.26	-0.16	14.82	14.79	48.21	-15.26	0.61	3.42	0.00
11.22	6.05	-0.15	14.80	14.76	48.22	-14.70	0.59	3.53	0.00
11.23	5.83	-0.15	14.77	14.73	48.23	-14.14	0.56	3.64	0.00
11.24	5.62	-0.14	14.74	14.71	48.24	-13.58	0.54	3.75	0.00
11.25	5.40	-0.13	14.71	14.68	48.25	-13.03	0.52	3.86	0.00
11.26	5.18	-0.13	14.68	14.65	48.26	-12.47	0.50	3.97	0.00
11.27	4.97	-0.12	14.65	14.62	48.27	-11.91	0.47	4.08	0.00
11.28	4.75	-0.12	14.63	14.60	48.28	-11.35	0.45	4.18	0.00
11.29	4.54	-0.11	14.60	14.57	48.29	-10.79	0.43	4.29	0.00
11.3	4.32	-0.11	14.57	14.54	48.3	-10.23	0.41	4.40	0.00
11.31	4.10	-0.10	14.54	14.52	48.31	-9.67	0.38	4.51	0.00
11.32	3.89	-0.10	14.51	14.49	48.32	-9.11	0.36	4.62	0.00
11.33	3.67	-0.09	14.48	14.46	48.33	-8.55	0.34	4.73	0.00
11.34	3.46	-0.09	14.45	14.43	48.34	-7.99	0.32	4.84	0.00
11.35	3.24	-0.08	14.43	14.41	48.35	-7.44	0.29	4.95	0.00
11.36	3.02	-0.08	14.40	14.38	48.36	-6.88	0.27	5.06	0.00
11.37	2.81	-0.07	14.37	14.35	48.37	-6.32	0.25	5.16	0.00
11.38	2.59	-0.06	14.34	14.33	48.38	-5.76	0.23	5.27	0.00
11.39	2.38	-0.06	14.31	14.30	48.39	-5.20	0.20	5.38	0.00
11.4	2.16	-0.05	14.28	14.27	48.4	-4.64	0.18	5.49	0.00
11.41	1.94	-0.05	14.26	14.24	48.41	-4.11	0.15	5.62	0.00
11.42	1.73	-0.04	14.23	14.22	48.42	-3.54	0.12	5.78	0.00
11.43	1.51	-0.04	14.20	14.19	48.43	-2.95	0.09	5.95	0.00
11.44	1.30	-0.03	14.17	14.16	48.44	-2.37	0.06	6.08	0.00
11.45	1.08	-0.03	14.14	14.14	48.45	-1.82	0.05	6.17	0.00
11.46	0.86	-0.02	14.11	14.11	48.46	-1.29	0.03	6.25	0.00
11.47	0.65	-0.02	14.08	14.08	48.47	-0.72	0.02	6.33	0.00
11.48	0.43	-0.01	14.06	14.05	48.48	-0.17	0.00	6.41	0.00
11.49	0.22	-0.01	14.03	14.03	48.49	0.39	-0.01	6.48	0.00
11.5	0.00	0.00	14.00	14.00	48.5	0.95	-0.02	6.56	0.00
11.51	-0.22	0.01	13.97	13.97	48.51	1.51	-0.04	6.64	0.00
11.52	-0.43	0.01	13.94	13.95	48.52	2.07	-0.05	6.71	0.00
11.53	-0.65	0.02	13.91	13.92	48.53	2.61	-0.07	6.97	0.00
11.54	-0.86	0.02	13.89	13.89	48.54	3.15	-0.10	7.63	0.00
11.55	-1.08	0.03	13.86	13.86	48.55	3.73	-0.13	8.54	0.00
11.56	-1.30	0.03	13.83	13.84	48.56	4.33	-0.16	9.35	0.23
11.57	-1.51	0.04	13.80	13.81	48.57	4.89	-0.19	9.88	0.79
11.58	-1.73	0.04	13.77	13.78	48.58	5.42	-0.21	10.34	1.42
11.59	-1.94	0.05	13.74	13.76	48.59	5.98	-0.23	10.79	2.09
11.6	-2.16	0.05	13.71	13.73	48.6	6.54	-0.25	11.24	2.77
11.61	-2.38	0.06	13.69	13.70	48.61	7.10	-0.28	11.69	3.44
11.62	-2.59	0.06	13.66	13.68	48.62	7.66	-0.30	12.14	4.12
11.63	-2.81	0.07	13.63	13.65	48.63	8.22	-0.32	12.59	4.80
11.64	-3.02	0.08	13.60	13.62	48.64	8.78	-0.34	13.03	5.48
11.65	-3.24	0.08	13.57	13.59	48.65	9.34	-0.37	13.48	6.16
11.66	-3.46	0.09	13.54	13.57	48.66	9.89	-0.39	13.93	6.83
11.67	-3.67	0.09	13.52	13.54	48.67	10.45	-0.41	14.38	7.51
11.68	-3.89	0.10	13.49	13.51	48.68	11.01	-0.43	14.83	8.19
11.69	-4.10	0.10	13.46	13.49	48.69	11.57	-0.46	15.27	8.87
11.7	-4.32	0.11	13.43	13.46	48.7	12.13	-0.48	15.72	9.55
11.71	-4.54	0.11	13.40	13.43	48.71	12.69	-0.50	16.17	10.23
11.72	-4.75	0.12	13.37	13.40	48.72	13.25	-0.52	16.62	10.90
11.73	-4.97	0.12	13.34	13.38	48.73	13.81	-0.55	17.07	11.58
11.74	-5.18	0.13	13.32	13.35	48.74	14.37	-0.57	17.51	12.26
11.75	-5.40	0.13	13.29	13.32	48.75	14.93	-0.59	17.96	12.94
11.76	-5.62	0.14	13.26	13.30	48.76	15.48	-0.61	18.41	13.62

11.77	-5.83	0.15	13.23	13.27	48.77	16.04	-0.64	18.86	14.30
11.78	-6.05	0.15	13.20	13.24	48.78	16.60	-0.66	19.31	14.97
11.79	-6.26	0.16	13.17	13.21	48.79	17.16	-0.68	19.75	15.65
11.8	-6.48	0.16	13.15	13.19	48.8	17.72	-0.70	20.20	16.33
11.81	-6.70	0.17	13.12	13.16	48.81	18.28	-0.72	20.65	17.01
11.82	-6.91	0.17	13.09	13.13	48.82	18.84	-0.75	21.10	17.69
11.83	-7.13	0.18	13.06	13.11	48.83	19.40	-0.77	21.55	18.37
11.84	-7.34	0.18	13.03	13.08	48.84	19.96	-0.79	22.00	19.04
11.85	-7.56	0.19	13.00	13.05	48.85	20.52	-0.81	22.44	19.72
11.86	-7.78	0.19	12.97	13.02	48.86	21.07	-0.84	22.89	20.40
11.87	-7.99	0.20	12.95	13.00	48.87	21.63	-0.86	23.34	21.08
11.88	-8.21	0.21	12.92	12.97	48.88	22.19	-0.88	23.79	21.76
11.89	-8.42	0.21	12.89	12.94	48.89	22.75	-0.90	24.24	22.43
11.9	-8.64	0.22	12.86	12.92	48.9	23.31	-0.93	24.68	23.11
11.91	-8.86	0.22	12.83	12.89	48.91	23.87	-0.95	25.13	23.79
11.92	-9.07	0.23	12.80	12.86	48.92	24.43	-0.97	25.58	24.47
11.93	-9.29	0.23	12.78	12.83	48.93	24.99	-0.99	26.03	25.15
11.94	-9.50	0.24	12.75	12.81	48.94	25.55	-1.02	26.48	25.83
11.95	-9.72	0.24	12.72	12.78	48.95	26.11	-1.04	26.92	26.50
11.96	-9.94	0.25	12.69	12.75	48.96	26.66	-1.06	27.37	27.18
11.97	-10.15	0.25	12.66	12.73	48.97	27.16	-1.10	27.72	27.71
11.98	-10.37	0.26	12.63	12.70	48.98	27.58	-1.17	27.82	27.86
11.99	-10.58	0.26	12.60	12.67	48.99	28.20	-1.30	27.86	27.92
12	-10.80	0.27	12.58	12.65	49	28.90	-1.44	27.89	27.96
12.01	-10.64	0.27	12.60	12.67	49.01	29.14	-1.44	27.89	27.97
12.02	-10.28	0.26	12.64	12.71	49.02	27.57	-1.39	26.80	26.31
12.03	-10.07	0.25	12.67	12.74	49.03	27.03	-1.37	26.44	25.76
12.04	-9.83	0.25	12.70	12.77	49.04	26.73	-1.35	26.05	25.19
12.05	-9.57	0.24	12.74	12.80	49.05	25.96	-1.32	25.52	24.38
12.06	-9.34	0.23	12.77	12.83	49.06	25.43	-1.30	25.06	23.68
12.07	-9.09	0.23	12.80	12.86	49.07	24.87	-1.28	24.61	23.00
12.08	-8.85	0.22	12.83	12.89	49.08	24.27	-1.25	24.14	22.29
12.09	-8.60	0.21	12.87	12.92	49.09	23.70	-1.23	23.67	21.58
12.1	-8.36	0.21	12.90	12.95	49.1	23.12	-1.21	23.21	20.88
12.11	-8.12	0.20	12.93	12.98	49.11	22.54	-1.18	22.75	20.18
12.12	-7.87	0.20	12.96	13.01	49.12	21.96	-1.16	22.28	19.48
12.13	-7.63	0.19	12.99	13.04	49.13	21.39	-1.14	21.82	18.78
12.14	-7.38	0.18	13.03	13.07	49.14	20.81	-1.11	21.36	18.08
12.15	-7.14	0.18	13.06	13.10	49.15	20.23	-1.09	20.89	17.38
12.16	-6.90	0.17	13.09	13.14	49.16	19.65	-1.07	20.43	16.67
12.17	-6.65	0.17	13.12	13.17	49.17	19.07	-1.04	19.97	15.97
12.18	-6.41	0.16	13.16	13.20	49.18	18.50	-1.02	19.50	15.27
12.19	-6.16	0.15	13.19	13.23	49.19	17.92	-1.00	19.04	14.57
12.2	-5.92	0.15	13.22	13.26	49.2	17.34	-0.97	18.58	13.87
12.21	-5.68	0.14	13.25	13.29	49.21	16.76	-0.95	18.11	13.17
12.22	-5.43	0.14	13.28	13.32	49.22	16.18	-0.93	17.65	12.47
12.23	-5.19	0.13	13.32	13.35	49.23	15.61	-0.91	17.19	11.77
12.24	-4.94	0.12	13.35	13.38	49.24	15.03	-0.88	16.72	11.06
12.25	-4.70	0.12	13.38	13.41	49.25	14.45	-0.86	16.26	10.36
12.26	-4.46	0.11	13.41	13.44	49.26	13.87	-0.84	15.80	9.66
12.27	-4.21	0.11	13.44	13.47	49.27	13.29	-0.81	15.33	8.96
12.28	-3.97	0.10	13.48	13.50	49.28	12.72	-0.79	14.87	8.26
12.29	-3.72	0.09	13.51	13.53	49.29	12.14	-0.77	14.41	7.56
12.3	-3.48	0.09	13.54	13.56	49.3	11.56	-0.74	13.94	6.86
12.31	-3.24	0.08	13.57	13.59	49.31	10.98	-0.72	13.48	6.16
12.32	-2.99	0.07	13.61	13.62	49.32	10.40	-0.70	13.02	5.45
12.33	-2.75	0.07	13.64	13.66	49.33	9.83	-0.67	12.55	4.75

12.34	-2.50	0.06	13.67	13.69	49.34	9.25	-0.65	12.09	4.05
12.35	-2.26	0.06	13.70	13.72	49.35	8.67	-0.63	11.63	3.35
12.36	-2.02	0.05	13.73	13.75	49.36	8.09	-0.60	11.16	2.65
12.37	-1.77	0.04	13.77	13.78	49.37	7.51	-0.58	10.70	1.95
12.38	-1.53	0.04	13.80	13.81	49.38	6.94	-0.56	10.24	1.25
12.39	-1.28	0.03	13.83	13.84	49.39	6.36	-0.53	9.77	0.55
12.4	-1.04	0.03	13.86	13.87	49.4	5.80	-0.51	9.11	0.14
12.41	-0.80	0.02	13.89	13.90	49.41	5.23	-0.47	8.17	0.03
12.42	-0.55	0.01	13.93	13.93	49.42	4.62	-0.44	7.14	0.01
12.43	-0.31	0.01	13.96	13.96	49.43	4.04	-0.40	6.13	0.00
12.44	-0.06	0.00	13.99	13.99	49.44	3.47	-0.37	5.12	0.00
12.45	0.18	0.00	14.02	14.02	49.45	2.89	-0.33	4.10	0.00
12.46	0.42	-0.01	14.06	14.05	49.46	2.31	-0.29	3.08	0.00
12.47	0.67	-0.02	14.09	14.08	49.47	1.73	-0.26	2.06	0.00
12.48	0.91	-0.02	14.12	14.11	49.48	1.16	-0.22	1.04	0.00
12.49	1.16	-0.03	14.15	14.15	49.49	0.64	-0.18	0.26	0.00
12.5	1.40	-0.03	14.18	14.18	49.5	0.19	-0.09	0.07	0.00
12.51	1.64	-0.04	14.22	14.21	49.51	-1.09	0.01	0.00	0.00
12.52	1.89	-0.05	14.25	14.24	49.52	-1.04	0.02	0.00	0.00
12.53	2.13	-0.05	14.28	14.27	49.53	-1.74	0.03	0.00	0.00
12.54	2.38	-0.06	14.31	14.30	49.54	-2.35	0.05	0.00	0.00
12.55	2.62	-0.07	14.34	14.33	49.55	-2.85	0.07	0.00	0.00
12.56	2.86	-0.07	14.38	14.36	49.56	-3.42	0.10	0.00	0.00
12.57	3.11	-0.08	14.41	14.39	49.57	-4.04	0.13	0.00	0.00
12.58	3.35	-0.08	14.44	14.42	49.58	-4.66	0.17	0.00	0.00
12.59	3.60	-0.09	14.47	14.45	49.59	-5.22	0.19	0.00	0.00
12.6	3.84	-0.10	14.51	14.48	49.6	-5.78	0.22	0.00	0.00
12.61	4.08	-0.10	14.54	14.51	49.61	-6.36	0.24	0.00	0.00
12.62	4.33	-0.11	14.57	14.54	49.62	-6.94	0.26	0.00	0.00
12.63	4.57	-0.11	14.60	14.57	49.63	-7.51	0.29	0.00	0.00
12.64	4.82	-0.12	14.63	14.61	49.64	-8.09	0.31	0.00	0.00
12.65	5.06	-0.13	14.67	14.64	49.65	-8.67	0.33	0.00	0.00
12.66	5.30	-0.13	14.70	14.67	49.66	-9.25	0.36	0.00	0.00
12.67	5.55	-0.14	14.73	14.70	49.67	-9.83	0.38	0.00	0.00
12.68	5.79	-0.14	14.76	14.73	49.68	-10.40	0.40	0.00	0.00
12.69	6.04	-0.15	14.79	14.76	49.69	-10.98	0.43	0.00	0.00
12.7	6.28	-0.16	14.83	14.79	49.7	-11.56	0.45	0.00	0.00
12.71	6.52	-0.16	14.86	14.82	49.71	-12.14	0.47	0.00	0.00
12.72	6.77	-0.17	14.89	14.85	49.72	-12.72	0.50	0.00	0.00
12.73	7.01	-0.18	14.92	14.88	49.73	-13.29	0.52	0.00	0.00
12.74	7.26	-0.18	14.96	14.91	49.74	-13.87	0.54	0.00	0.00
12.75	7.50	-0.19	14.99	14.94	49.75	-14.45	0.57	0.00	0.00
12.76	7.74	-0.19	15.02	14.97	49.76	-15.03	0.59	0.00	0.00
12.77	7.99	-0.20	15.05	15.00	49.77	-15.61	0.61	0.00	0.00
12.78	8.23	-0.21	15.08	15.03	49.78	-16.18	0.64	0.00	0.00
12.79	8.48	-0.21	15.12	15.07	49.79	-16.76	0.66	0.00	0.00
12.8	8.72	-0.22	15.15	15.10	49.8	-17.34	0.68	0.00	0.00
12.81	8.96	-0.22	15.18	15.13	49.81	-17.92	0.71	0.00	0.00
12.82	9.21	-0.23	15.21	15.16	49.82	-18.50	0.73	0.00	0.00
12.83	9.45	-0.24	15.24	15.19	49.83	-19.07	0.76	0.00	0.00
12.84	9.70	-0.24	15.28	15.22	49.84	-19.65	0.78	0.00	0.00
12.85	9.94	-0.25	15.31	15.25	49.85	-20.23	0.80	0.00	0.00
12.86	10.18	-0.25	15.34	15.28	49.86	-20.81	0.83	0.00	0.00
12.87	10.43	-0.26	15.37	15.31	49.87	-21.39	0.85	0.00	0.00
12.88	10.67	-0.27	15.41	15.34	49.88	-21.96	0.87	0.00	0.00
12.89	10.92	-0.27	15.44	15.37	49.89	-22.54	0.90	0.00	0.00
12.9	11.16	-0.28	15.47	15.41	49.9	-23.12	0.92	0.00	0.00

12.91	11.40	-0.29	15.54	15.50	49.91	-23.70	0.94	0.00	0.00
12.92	11.65	-0.29	15.62	15.61	49.92	-24.28	0.97	0.00	0.00
12.93	11.89	-0.30	15.72	15.75	49.93	-24.85	0.99	0.00	0.00
12.94	12.14	-0.31	15.83	15.90	49.94	-25.43	1.01	0.00	0.00
12.95	12.38	-0.32	15.95	16.08	49.95	-26.01	1.04	0.00	0.00
12.96	12.62	-0.33	16.08	16.27	49.96	-26.59	1.06	0.00	0.00
12.97	12.87	-0.33	16.22	16.48	49.97	-27.15	1.09	0.00	0.00
12.98	13.11	-0.34	16.36	16.70	49.98	-27.52	1.16	0.00	0.00
12.99	13.36	-0.35	16.51	16.92	49.99	-28.13	1.28	0.00	0.00
13	13.60	-0.36	16.67	17.15	50	-28.89	1.44	0.00	0.00
13.01	13.44	-0.35	16.54	16.96	50.01	-29.17	1.45	0.00	0.00
13.02	13.02	-0.34	16.32	16.62	50.02	-27.59	1.39	0.00	0.00
13.03	12.78	-0.33	16.17	16.40	50.03	-27.02	1.37	0.00	0.00
13.04	12.53	-0.32	16.02	16.19	50.04	-26.74	1.35	0.00	0.00
13.05	12.23	-0.31	15.88	15.98	50.05	-25.97	1.33	0.00	0.00
13.06	11.97	-0.30	15.75	15.79	50.06	-25.43	1.30	0.00	0.00
13.07	11.70	-0.29	15.64	15.64	50.07	-24.87	1.28	0.00	0.00
13.08	11.42	-0.29	15.54	15.50	50.08	-24.28	1.26	0.00	0.00
13.09	11.15	-0.28	15.48	15.42	50.09	-23.70	1.23	0.00	0.00
13.1	10.88	-0.27	15.44	15.37	50.1	-23.13	1.21	0.00	0.00
13.11	10.61	-0.27	15.40	15.33	50.11	-22.55	1.19	0.00	0.00
13.12	10.34	-0.26	15.36	15.30	50.12	-21.98	1.16	0.00	0.00
13.13	10.06	-0.25	15.33	15.26	50.13	-21.40	1.14	0.00	0.00
13.14	9.79	-0.24	15.29	15.23	50.14	-20.82	1.12	0.00	0.00
13.15	9.52	-0.24	15.25	15.20	50.15	-20.25	1.09	0.00	0.00
13.16	9.25	-0.23	15.22	15.16	50.16	-19.67	1.07	0.00	0.00
13.17	8.98	-0.22	15.18	15.13	50.17	-19.09	1.05	0.00	0.00
13.18	8.70	-0.22	15.15	15.09	50.18	-18.51	1.02	0.00	0.00
13.19	8.43	-0.21	15.11	15.06	50.19	-17.94	1.00	0.00	0.00
13.2	8.16	-0.20	15.07	15.03	50.2	-17.36	0.98	0.00	0.00
13.21	7.89	-0.20	15.04	14.99	50.21	-16.78	0.95	0.00	0.00
13.22	7.62	-0.19	15.00	14.96	50.22	-16.21	0.93	0.00	0.00
13.23	7.34	-0.18	14.97	14.92	50.23	-15.63	0.91	0.00	0.00
13.24	7.07	-0.18	14.93	14.89	50.24	-15.05	0.88	0.00	0.00
13.25	6.80	-0.17	14.90	14.85	50.25	-14.48	0.86	0.00	0.00
13.26	6.53	-0.16	14.86	14.82	50.26	-13.90	0.84	0.00	0.00
13.27	6.26	-0.16	14.82	14.79	50.27	-13.32	0.81	0.00	0.00
13.28	5.98	-0.15	14.79	14.75	50.28	-12.74	0.79	0.00	0.00
13.29	5.71	-0.14	14.75	14.72	50.29	-12.17	0.77	0.00	0.00
13.3	5.44	-0.14	14.72	14.68	50.3	-11.59	0.74	0.00	0.00
13.31	5.17	-0.13	14.68	14.65	50.31	-11.01	0.72	0.00	0.00
13.32	4.90	-0.12	14.64	14.62	50.32	-10.44	0.70	0.00	0.00
13.33	4.62	-0.12	14.61	14.58	50.33	-9.86	0.67	0.00	0.00
13.34	4.35	-0.11	14.57	14.55	50.34	-9.28	0.65	0.00	0.00
13.35	4.08	-0.10	14.54	14.51	50.35	-8.71	0.63	0.00	0.00
13.36	3.81	-0.10	14.50	14.48	50.36	-8.13	0.60	0.00	0.00
13.37	3.54	-0.09	14.47	14.44	50.37	-7.55	0.58	0.00	0.00
13.38	3.26	-0.08	14.43	14.41	50.38	-6.97	0.55	0.00	0.00
13.39	2.99	-0.07	14.39	14.38	50.39	-6.40	0.53	0.00	0.00
13.4	2.72	-0.07	14.36	14.34	50.4	-5.86	0.50	0.00	0.00
13.41	2.45	-0.06	14.32	14.31	50.41	-5.26	0.47	0.00	0.00
13.42	2.18	-0.05	14.29	14.27	50.42	-4.66	0.43	0.00	0.00
13.43	1.90	-0.05	14.25	14.24	50.43	-4.09	0.39	0.00	0.00
13.44	1.63	-0.04	14.21	14.21	50.44	-3.51	0.36	0.00	0.00
13.45	1.36	-0.03	14.18	14.17	50.45	-2.93	0.32	0.00	0.00
13.46	1.09	-0.03	14.14	14.14	50.46	-2.36	0.29	0.00	0.00
13.47	0.82	-0.02	14.11	14.10	50.47	-1.78	0.25	0.00	0.00

13.48	0.54	-0.01	14.07	14.07	50.48	-1.20	0.21	0.00	0.00
13.49	0.27	-0.01	14.04	14.03	50.49	-0.77	0.15	0.00	0.00
13.5	0.00	0.00	14.00	14.00	50.5	-0.25	0.04	0.00	0.00
13.51	-0.27	0.01	13.96	13.97	50.51	0.47	-0.11	0.00	0.00
13.52	-0.54	0.01	13.93	13.93	50.52	1.41	-0.21	1.09	0.00
13.53	-0.82	0.02	13.89	13.90	50.53	1.83	-0.24	1.72	0.00
13.54	-1.09	0.03	13.86	13.86	50.54	2.19	-0.27	2.50	0.00
13.55	-1.36	0.03	13.82	13.83	50.55	2.84	-0.31	3.59	0.00
13.56	-1.63	0.04	13.78	13.80	50.56	3.43	-0.35	4.64	0.00
13.57	-1.90	0.05	13.75	13.76	50.57	3.98	-0.38	5.64	0.00
13.58	-2.18	0.05	13.71	13.73	50.58	4.56	-0.42	6.67	0.00
13.59	-2.45	0.06	13.68	13.69	50.59	5.15	-0.46	7.71	0.00
13.6	-2.72	0.07	13.64	13.66	50.6	5.72	-0.49	8.74	0.00
13.61	-2.99	0.07	13.61	13.62	50.61	6.33	-0.52	9.49	0.41
13.62	-3.26	0.08	13.57	13.59	50.62	6.89	-0.55	10.01	1.01
13.63	-3.54	0.09	13.53	13.56	50.63	7.45	-0.57	10.49	1.68
13.64	-3.81	0.10	13.50	13.52	50.64	8.03	-0.59	10.96	2.39
13.65	-4.08	0.10	13.46	13.49	50.65	8.61	-0.62	11.43	3.09
13.66	-4.35	0.11	13.43	13.45	50.66	9.18	-0.64	11.90	3.80
13.67	-4.62	0.12	13.39	13.42	50.67	9.76	-0.66	12.36	4.50
13.68	-4.90	0.12	13.35	13.39	50.68	10.34	-0.69	12.83	5.21
13.69	-5.17	0.13	13.32	13.35	50.69	10.91	-0.71	13.30	5.92
13.7	-5.44	0.14	13.28	13.32	50.7	11.49	-0.73	13.77	6.62
13.71	-5.71	0.14	13.25	13.28	50.71	12.07	-0.76	14.23	7.33
13.72	-5.98	0.15	13.21	13.25	50.72	12.64	-0.78	14.70	8.03
13.73	-6.26	0.16	13.18	13.22	50.73	13.22	-0.80	15.17	8.74
13.74	-6.53	0.16	13.14	13.18	50.74	13.80	-0.83	15.64	9.45
13.75	-6.80	0.17	13.10	13.15	50.75	14.38	-0.85	16.10	10.15
13.76	-7.07	0.18	13.07	13.11	50.76	14.95	-0.87	16.57	10.86
13.77	-7.34	0.18	13.03	13.08	50.77	15.53	-0.90	17.04	11.57
13.78	-7.62	0.19	13.00	13.04	50.78	16.11	-0.92	17.51	12.27
13.79	-7.89	0.20	12.96	13.01	50.79	16.68	-0.95	17.97	12.98
13.8	-8.16	0.20	12.92	12.98	50.8	17.26	-0.97	18.44	13.69
13.81	-8.43	0.21	12.89	12.94	50.81	17.84	-0.99	18.91	14.39
13.82	-8.70	0.22	12.85	12.91	50.82	18.41	-1.02	19.38	15.10
13.83	-8.98	0.22	12.82	12.87	50.83	18.99	-1.04	19.84	15.80
13.84	-9.25	0.23	12.78	12.84	50.84	19.57	-1.06	20.31	16.51
13.85	-9.52	0.24	12.75	12.81	50.85	20.15	-1.09	20.78	17.22
13.86	-9.79	0.24	12.71	12.77	50.86	20.72	-1.11	21.25	17.92
13.87	-10.06	0.25	12.67	12.74	50.87	21.30	-1.13	21.71	18.63
13.88	-10.34	0.26	12.64	12.70	50.88	21.88	-1.16	22.18	19.34
13.89	-10.61	0.27	12.60	12.67	50.89	22.45	-1.18	22.65	20.04
13.9	-10.88	0.27	12.57	12.64	50.9	23.03	-1.20	23.12	20.75
13.91	-11.15	0.28	12.53	12.60	50.91	23.61	-1.23	23.59	21.46
13.92	-11.42	0.29	12.49	12.56	50.92	24.18	-1.25	24.06	22.17
13.93	-11.70	0.29	12.44	12.51	50.93	24.76	-1.27	24.52	22.87
13.94	-11.97	0.30	12.40	12.46	50.94	25.34	-1.30	24.99	23.58
13.95	-12.24	0.31	12.35	12.41	50.95	25.92	-1.32	25.46	24.28
13.96	-12.51	0.32	12.30	12.35	50.96	26.49	-1.34	25.92	24.99
13.97	-12.78	0.33	12.25	12.29	50.97	27.07	-1.37	26.39	25.69
13.98	-13.06	0.34	12.20	12.23	50.98	27.65	-1.39	26.86	26.40
13.99	-13.33	0.35	12.15	12.17	50.99	28.22	-1.41	27.33	27.11
14	-13.60	0.36	12.09	12.11	51	28.77	-1.44	27.75	27.75
14.01	-13.45	0.35	12.13	12.16	51.01	28.54	-1.43	27.47	27.34
14.02	-13.02	0.34	12.20	12.24	51.02	27.57	-1.39	26.79	26.30
14.03	-12.78	0.33	12.25	12.29	51.03	27.03	-1.37	26.36	25.65
14.04	-12.53	0.32	12.30	12.35	51.04	26.54	-1.35	25.93	25.00

14.05	-12.23	0.31	12.35	12.41	51.05	25.91	-1.32	25.44	24.26
14.06	-11.97	0.30	12.40	12.46	51.06	25.34	-1.30	24.97	23.56
14.07	-11.70	0.29	12.44	12.51	51.07	24.77	-1.28	24.51	22.86
14.08	-11.42	0.29	12.49	12.56	51.08	24.19	-1.25	24.04	22.15
14.09	-11.15	0.28	12.53	12.60	51.09	23.62	-1.23	23.57	21.44
14.1	-10.88	0.27	12.57	12.63	51.1	23.04	-1.21	23.11	20.73
14.11	-10.61	0.27	12.60	12.67	51.11	22.46	-1.18	22.64	20.03
14.12	-10.34	0.26	12.64	12.70	51.12	21.89	-1.16	22.17	19.32
14.13	-10.06	0.25	12.67	12.74	51.13	21.31	-1.14	21.71	18.62
14.14	-9.79	0.24	12.71	12.77	51.14	20.74	-1.11	21.24	17.91
14.15	-9.52	0.24	12.75	12.81	51.15	20.16	-1.09	20.77	17.21
14.16	-9.25	0.23	12.78	12.84	51.16	19.58	-1.07	20.31	16.50
14.17	-8.98	0.22	12.82	12.87	51.17	19.01	-1.04	19.84	15.80
14.18	-8.70	0.22	12.85	12.91	51.18	18.43	-1.02	19.37	15.09
14.19	-8.43	0.21	12.89	12.94	51.19	17.86	-1.00	18.91	14.39
14.2	-8.16	0.20	12.92	12.98	51.2	17.28	-0.97	18.44	13.68
14.21	-7.89	0.20	12.96	13.01	51.21	16.70	-0.95	17.97	12.98
14.22	-7.62	0.19	13.00	13.04	51.22	16.13	-0.93	17.51	12.27
14.23	-7.34	0.18	13.03	13.08	51.23	15.55	-0.90	17.04	11.57
14.24	-7.07	0.18	13.07	13.11	51.24	14.98	-0.88	16.57	10.86
14.25	-6.80	0.17	13.10	13.15	51.25	14.40	-0.86	16.11	10.16
14.26	-6.53	0.16	13.14	13.18	51.26	13.82	-0.83	15.64	9.45
14.27	-6.26	0.16	13.18	13.22	51.27	13.25	-0.81	15.17	8.75
14.28	-5.98	0.15	13.21	13.25	51.28	12.67	-0.79	14.71	8.04
14.29	-5.71	0.14	13.25	13.28	51.29	12.10	-0.76	14.24	7.34
14.3	-5.44	0.14	13.28	13.32	51.3	11.52	-0.74	13.77	6.63
14.31	-5.17	0.13	13.32	13.35	51.31	10.94	-0.72	13.30	5.93
14.32	-4.90	0.12	13.35	13.39	51.32	10.37	-0.69	12.84	5.22
14.33	-4.62	0.12	13.39	13.42	51.33	9.79	-0.67	12.37	4.52
14.34	-4.35	0.11	13.43	13.45	51.34	9.22	-0.65	11.90	3.81
14.35	-4.08	0.10	13.46	13.49	51.35	8.64	-0.62	11.44	3.11
14.36	-3.81	0.10	13.50	13.52	51.36	8.06	-0.60	10.97	2.40
14.37	-3.54	0.09	13.53	13.56	51.37	7.49	-0.58	10.50	1.70
14.38	-3.26	0.08	13.57	13.59	51.38	6.91	-0.55	10.04	0.99
14.39	-2.99	0.07	13.61	13.62	51.39	6.34	-0.53	9.57	0.29
14.4	-2.72	0.07	13.64	13.66	51.4	5.80	-0.50	8.77	0.07
14.41	-2.45	0.06	13.68	13.69	51.41	5.20	-0.46	7.74	0.02
14.42	-2.18	0.05	13.71	13.73	51.42	4.60	-0.43	6.70	0.00
14.43	-1.90	0.05	13.75	13.76	51.43	4.04	-0.39	5.68	0.00
14.44	-1.63	0.04	13.78	13.80	51.44	3.46	-0.35	4.66	0.00
14.45	-1.36	0.03	13.82	13.83	51.45	2.88	-0.32	3.62	0.00
14.46	-1.09	0.03	13.86	13.86	51.46	2.30	-0.28	2.60	0.00
14.47	-0.82	0.02	13.89	13.90	51.47	1.73	-0.25	1.57	0.00
14.48	-0.54	0.01	13.93	13.93	51.48	1.15	-0.21	0.54	0.00
14.49	-0.27	0.01	13.96	13.97	51.49	0.74	-0.15	0.14	0.00
14.5	0.00	0.00	14.00	14.00	51.5	0.20	-0.03	0.03	0.00
14.51	0.27	-0.01	14.04	14.03	51.51	-0.56	0.13	0.00	0.00
14.52	0.54	-0.01	14.07	14.07	51.52	-1.67	0.23	0.00	0.00
14.53	0.82	-0.02	14.11	14.10	51.53	-1.93	0.25	0.00	0.00
14.54	1.09	-0.03	14.14	14.14	51.54	-2.17	0.28	0.00	0.00
14.55	1.36	-0.03	14.18	14.17	51.55	-2.88	0.32	0.00	0.00
14.56	1.63	-0.04	14.21	14.21	51.56	-3.50	0.36	0.00	0.00
14.57	1.90	-0.05	14.25	14.24	51.57	-4.02	0.39	0.00	0.00
14.58	2.18	-0.05	14.29	14.27	51.58	-4.60	0.43	0.00	0.00
14.59	2.45	-0.06	14.32	14.31	51.59	-5.19	0.46	0.00	0.00
14.6	2.72	-0.07	14.36	14.34	51.6	-5.76	0.50	0.00	0.00
14.61	2.99	-0.07	14.39	14.38	51.61	-6.37	0.53	0.00	0.00

14.62	3.26	-0.08	14.43	14.41	51.62	-6.93	0.55	0.00	0.00
14.63	3.54	-0.09	14.47	14.44	51.63	-7.48	0.58	0.00	0.00
14.64	3.81	-0.10	14.50	14.48	51.64	-8.07	0.60	0.00	0.00
14.65	4.08	-0.10	14.54	14.51	51.65	-8.64	0.62	0.00	0.00
14.66	4.35	-0.11	14.57	14.55	51.66	-9.22	0.65	0.00	0.00
14.67	4.62	-0.12	14.61	14.58	51.67	-9.79	0.67	0.00	0.00
14.68	4.90	-0.12	14.64	14.62	51.68	-10.37	0.69	0.00	0.00
14.69	5.17	-0.13	14.68	14.65	51.69	-10.94	0.72	0.00	0.00
14.7	5.44	-0.14	14.72	14.68	51.7	-11.52	0.74	0.00	0.00
14.71	5.71	-0.14	14.75	14.72	51.71	-12.10	0.76	0.00	0.00
14.72	5.98	-0.15	14.79	14.75	51.72	-12.67	0.79	0.00	0.00
14.73	6.26	-0.16	14.82	14.79	51.73	-13.25	0.81	0.00	0.00
14.74	6.53	-0.16	14.86	14.82	51.74	-13.82	0.83	0.00	0.00
14.75	6.80	-0.17	14.90	14.85	51.75	-14.40	0.86	0.00	0.00
14.76	7.07	-0.18	14.93	14.89	51.76	-14.98	0.88	0.00	0.00
14.77	7.34	-0.18	14.97	14.92	51.77	-15.55	0.90	0.00	0.00
14.78	7.62	-0.19	15.00	14.96	51.78	-16.13	0.93	0.00	0.00
14.79	7.89	-0.20	15.04	14.99	51.79	-16.70	0.95	0.00	0.00
14.8	8.16	-0.20	15.07	15.03	51.8	-17.28	0.97	0.00	0.00
14.81	8.43	-0.21	15.11	15.06	51.81	-17.86	1.00	0.00	0.00
14.82	8.70	-0.22	15.15	15.09	51.82	-18.43	1.02	0.00	0.00
14.83	8.98	-0.22	15.18	15.13	51.83	-19.01	1.04	0.00	0.00
14.84	9.25	-0.23	15.22	15.16	51.84	-19.58	1.07	0.00	0.00
14.85	9.52	-0.24	15.25	15.20	51.85	-20.16	1.09	0.00	0.00
14.86	9.79	-0.24	15.29	15.23	51.86	-20.74	1.11	0.00	0.00
14.87	10.06	-0.25	15.33	15.26	51.87	-21.31	1.14	0.00	0.00
14.88	10.34	-0.26	15.36	15.30	51.88	-21.89	1.16	0.00	0.00
14.89	10.61	-0.27	15.40	15.33	51.89	-22.46	1.18	0.00	0.00
14.9	10.88	-0.27	15.43	15.37	51.9	-23.04	1.21	0.00	0.00
14.91	11.15	-0.28	15.47	15.41	51.91	-23.62	1.23	0.00	0.00
14.92	11.42	-0.29	15.55	15.51	51.92	-24.19	1.25	0.00	0.00
14.93	11.70	-0.29	15.64	15.64	51.93	-24.77	1.28	0.00	0.00
14.94	11.97	-0.30	15.75	15.80	51.94	-25.34	1.30	0.00	0.00
14.95	12.24	-0.31	15.88	15.98	51.95	-25.92	1.32	0.00	0.00
14.96	12.51	-0.32	16.02	16.19	51.96	-26.50	1.35	0.00	0.00
14.97	12.78	-0.33	16.17	16.41	51.97	-27.07	1.37	0.00	0.00
14.98	13.06	-0.34	16.33	16.65	51.98	-27.65	1.39	0.00	0.00
14.99	13.33	-0.35	16.50	16.90	51.99	-28.22	1.42	0.00	0.00
15	13.60	-0.36	16.67	17.15	52	-28.78	1.44	0.00	0.00
15.01	13.45	-0.35	16.54	16.97	52.01	-28.50	1.43	0.00	0.00
15.02	13.02	-0.34	16.31	16.62	52.02	-27.50	1.39	0.00	0.00
15.03	12.78	-0.33	16.17	16.40	52.03	-26.93	1.37	0.00	0.00
15.04	12.53	-0.32	16.02	16.19	52.04	-26.41	1.35	0.00	0.00
15.05	12.23	-0.31	15.88	15.98	52.05	-25.74	1.32	0.00	0.00
15.06	11.97	-0.30	15.75	15.79	52.06	-25.14	1.29	0.00	0.00
15.07	11.70	-0.29	15.64	15.64	52.07	-24.54	1.27	0.00	0.00
15.08	11.42	-0.29	15.54	15.50	52.08	-23.92	1.25	0.00	0.00
15.09	11.15	-0.28	15.48	15.42	52.09	-23.31	1.22	0.00	0.00
15.1	10.88	-0.27	15.44	15.37	52.1	-22.70	1.20	0.00	0.00
15.11	10.61	-0.27	15.40	15.33	52.11	-22.09	1.17	0.00	0.00
15.12	10.34	-0.26	15.36	15.30	52.12	-21.48	1.15	0.00	0.00
15.13	10.06	-0.25	15.33	15.26	52.13	-20.87	1.12	0.00	0.00
15.14	9.79	-0.24	15.29	15.23	52.14	-20.26	1.10	0.00	0.00
15.15	9.52	-0.24	15.25	15.20	52.15	-19.65	1.07	0.00	0.00
15.16	9.25	-0.23	15.22	15.16	52.16	-19.04	1.05	0.00	0.00
15.17	8.98	-0.22	15.18	15.13	52.17	-18.43	1.02	0.00	0.00
15.18	8.70	-0.22	15.15	15.09	52.18	-17.82	1.00	0.00	0.00

15.19	8.43	-0.21	15.11	15.06	52.19	-17.21	0.97	0.00	0.00
15.2	8.16	-0.20	15.07	15.03	52.2	-16.60	0.95	0.00	0.00
15.21	7.89	-0.20	15.04	14.99	52.21	-15.99	0.92	0.00	0.00
15.22	7.62	-0.19	15.00	14.96	52.22	-15.38	0.90	0.00	0.00
15.23	7.34	-0.18	14.97	14.92	52.23	-14.77	0.87	0.00	0.00
15.24	7.07	-0.18	14.93	14.89	52.24	-14.16	0.85	0.00	0.00
15.25	6.80	-0.17	14.90	14.85	52.25	-13.55	0.82	0.00	0.00
15.26	6.53	-0.16	14.86	14.82	52.26	-12.94	0.80	0.00	0.00
15.27	6.26	-0.16	14.82	14.79	52.27	-12.33	0.77	0.00	0.00
15.28	5.98	-0.15	14.79	14.75	52.28	-11.72	0.75	0.00	0.00
15.29	5.71	-0.14	14.75	14.72	52.29	-11.11	0.73	0.00	0.00
15.3	5.44	-0.14	14.72	14.68	52.3	-10.50	0.70	0.00	0.00
15.31	5.17	-0.13	14.68	14.65	52.31	-9.89	0.68	0.00	0.00
15.32	4.90	-0.12	14.64	14.62	52.32	-9.28	0.65	0.00	0.00
15.33	4.62	-0.12	14.61	14.58	52.33	-8.67	0.63	0.00	0.00
15.34	4.35	-0.11	14.57	14.55	52.34	-8.06	0.60	0.00	0.00
15.35	4.08	-0.10	14.54	14.51	52.35	-7.45	0.58	0.00	0.00
15.36	3.81	-0.10	14.50	14.48	52.36	-6.84	0.55	0.00	0.00
15.37	3.54	-0.09	14.47	14.44	52.37	-6.24	0.53	0.00	0.00
15.38	3.26	-0.08	14.43	14.41	52.38	-5.66	0.49	0.00	0.00
15.39	2.99	-0.07	14.39	14.38	52.39	-5.02	0.45	0.00	0.00
15.4	2.72	-0.07	14.36	14.34	52.4	-4.39	0.42	0.00	0.00
15.41	2.45	-0.06	14.32	14.31	52.41	-3.79	0.38	0.00	0.00
15.42	2.18	-0.05	14.29	14.27	52.42	-3.18	0.34	0.00	0.00
15.43	1.90	-0.05	14.25	14.24	52.43	-2.57	0.30	0.00	0.00
15.44	1.63	-0.04	14.21	14.21	52.44	-1.96	0.26	0.00	0.00
15.45	1.36	-0.03	14.18	14.17	52.45	-1.35	0.23	0.00	0.00
15.46	1.09	-0.03	14.14	14.14	52.46	-0.85	0.17	0.00	0.00
15.47	0.82	-0.02	14.11	14.10	52.47	-0.34	0.06	0.00	0.00
15.48	0.54	-0.01	14.07	14.07	52.48	0.43	-0.10	0.00	0.00
15.49	0.27	-0.01	14.04	14.03	52.49	1.39	-0.20	1.04	0.00
15.5	0.00	0.00	14.00	14.00	52.5	1.88	-0.25	1.77	0.00
15.51	-0.27	0.01	13.96	13.97	52.51	2.25	-0.28	2.56	0.00
15.52	-0.54	0.01	13.93	13.93	52.52	2.92	-0.32	3.69	0.00
15.53	-0.82	0.02	13.89	13.90	52.53	3.55	-0.36	4.82	0.00
15.54	-1.09	0.03	13.86	13.86	52.54	4.14	-0.40	5.87	0.00
15.55	-1.36	0.03	13.82	13.83	52.55	4.75	-0.44	6.96	0.00
15.56	-1.63	0.04	13.78	13.80	52.56	5.36	-0.47	8.06	0.00
15.57	-1.90	0.05	13.75	13.76	52.57	5.98	-0.51	9.10	0.07
15.58	-2.18	0.05	13.71	13.73	52.58	6.62	-0.54	9.75	0.68
15.59	-2.45	0.06	13.68	13.69	52.59	7.19	-0.56	10.25	1.34
15.6	-2.72	0.07	13.64	13.66	52.6	7.79	-0.59	10.75	2.08
15.61	-2.99	0.07	13.61	13.62	52.61	8.42	-0.61	11.25	2.83
15.62	-3.26	0.08	13.57	13.59	52.62	9.02	-0.64	11.75	3.57
15.63	-3.54	0.09	13.53	13.56	52.63	9.63	-0.66	12.24	4.32
15.64	-3.81	0.10	13.50	13.52	52.64	10.24	-0.69	12.73	5.07
15.65	-4.08	0.10	13.46	13.49	52.65	10.85	-0.71	13.23	5.81
15.66	-4.35	0.11	13.43	13.45	52.66	11.46	-0.74	13.72	6.56
15.67	-4.62	0.12	13.39	13.42	52.67	12.07	-0.76	14.22	7.31
15.68	-4.90	0.12	13.35	13.39	52.68	12.68	-0.79	14.71	8.05
15.69	-5.17	0.13	13.32	13.35	52.69	13.29	-0.81	15.21	8.80
15.7	-5.44	0.14	13.28	13.32	52.7	13.90	-0.84	15.70	9.55
15.71	-5.71	0.14	13.25	13.28	52.71	14.51	-0.86	16.19	10.29
15.72	-5.98	0.15	13.21	13.25	52.72	15.12	-0.89	16.69	11.04
15.73	-6.26	0.16	13.18	13.22	52.73	15.73	-0.91	17.18	11.79
15.74	-6.53	0.16	13.14	13.18	52.74	16.34	-0.94	17.68	12.53
15.75	-6.80	0.17	13.10	13.15	52.75	16.95	-0.96	18.17	13.28

15.76	-7.07	0.18	13.07	13.11	52.76	17.56	-0.98	18.67	14.03
15.77	-7.34	0.18	13.03	13.08	52.77	18.17	-1.01	19.16	14.77
15.78	-7.62	0.19	13.00	13.04	52.78	18.78	-1.03	19.65	15.52
15.79	-7.89	0.20	12.96	13.01	52.79	19.39	-1.06	20.15	16.27
15.8	-8.16	0.20	12.92	12.98	52.8	20.00	-1.08	20.64	17.01
15.81	-8.43	0.21	12.89	12.94	52.81	20.61	-1.11	21.14	17.76
15.82	-8.70	0.22	12.85	12.91	52.82	21.22	-1.13	21.63	18.51
15.83	-8.98	0.22	12.82	12.87	52.83	21.83	-1.16	22.13	19.25
15.84	-9.25	0.23	12.78	12.84	52.84	22.44	-1.18	22.62	20.00
15.85	-9.52	0.24	12.75	12.81	52.85	23.05	-1.21	23.11	20.75
15.86	-9.79	0.24	12.71	12.77	52.86	23.66	-1.23	23.61	21.49
15.87	-10.06	0.25	12.67	12.74	52.87	24.27	-1.26	24.10	22.24
15.88	-10.34	0.26	12.64	12.70	52.88	24.88	-1.28	24.60	22.99
15.89	-10.61	0.27	12.60	12.67	52.89	25.49	-1.31	25.09	23.74
15.9	-10.88	0.27	12.57	12.64	52.9	26.10	-1.33	25.59	24.48
15.91	-11.15	0.28	12.53	12.60	52.91	26.71	-1.36	26.08	25.23
15.92	-11.42	0.29	12.49	12.56	52.92	27.32	-1.38	26.57	25.98
15.93	-11.70	0.29	12.44	12.51	52.93	27.93	-1.41	27.07	26.72
15.94	-11.97	0.30	12.40	12.46	52.94	28.54	-1.43	27.56	27.47
15.95	-12.24	0.31	12.35	12.41	52.95	28.99	-1.48	27.81	27.85
15.96	-12.51	0.32	12.30	12.35	52.96	29.53	-1.59	27.89	27.97
15.97	-12.78	0.33	12.25	12.29	52.97	30.28	-1.74	27.93	28.04
15.98	-13.06	0.34	12.20	12.23	52.98	31.02	-1.90	27.96	28.08
15.99	-13.33	0.35	12.15	12.17	52.99	31.65	-2.03	27.98	28.12
16	-13.60	0.36	12.09	12.11	53	32.21	-2.16	28.00	28.15
16.01	-13.45	0.35	12.13	12.16	53.01	32.33	-2.16	27.93	28.05
16.02	-13.02	0.34	12.20	12.24	53.02	30.73	-2.10	26.81	26.35
16.03	-12.78	0.33	12.25	12.29	53.03	30.14	-2.08	26.40	25.72
16.04	-12.53	0.32	12.30	12.35	53.04	29.76	-2.06	25.95	25.06
16.05	-12.23	0.31	12.35	12.41	53.05	28.93	-2.03	25.37	24.17
16.06	-11.97	0.30	12.40	12.46	53.06	28.33	-2.00	24.85	23.39
16.07	-11.70	0.29	12.44	12.51	53.07	27.70	-1.98	24.35	22.63
16.08	-11.42	0.29	12.49	12.56	53.08	27.05	-1.95	23.82	21.83
16.09	-11.15	0.28	12.53	12.60	53.09	26.40	-1.92	23.30	21.04
16.1	-10.88	0.27	12.57	12.63	53.1	25.76	-1.90	22.78	20.25
16.11	-10.61	0.27	12.60	12.67	53.11	25.12	-1.87	22.25	19.46
16.12	-10.34	0.26	12.64	12.70	53.12	24.47	-1.84	21.73	18.67
16.13	-10.06	0.25	12.67	12.74	53.13	23.83	-1.82	21.21	17.89
16.14	-9.79	0.24	12.71	12.77	53.14	23.18	-1.79	20.69	17.10
16.15	-9.52	0.24	12.75	12.81	53.15	22.54	-1.77	20.17	16.31
16.16	-9.25	0.23	12.78	12.84	53.16	21.90	-1.74	19.64	15.52
16.17	-8.98	0.22	12.82	12.87	53.17	21.25	-1.71	19.12	14.73
16.18	-8.70	0.22	12.85	12.91	53.18	20.61	-1.69	18.60	13.95
16.19	-8.43	0.21	12.89	12.94	53.19	19.96	-1.66	18.08	13.16
16.2	-8.16	0.20	12.92	12.98	53.2	19.32	-1.63	17.56	12.37
16.21	-7.89	0.20	12.96	13.01	53.21	18.68	-1.61	17.03	11.58
16.22	-7.62	0.19	13.00	13.04	53.22	18.03	-1.58	16.51	10.79
16.23	-7.34	0.18	13.03	13.08	53.23	17.39	-1.56	15.99	10.00
16.24	-7.07	0.18	13.07	13.11	53.24	16.74	-1.53	15.47	9.22
16.25	-6.80	0.17	13.10	13.15	53.25	16.10	-1.50	14.95	8.43
16.26	-6.53	0.16	13.14	13.18	53.26	15.46	-1.48	14.43	7.64
16.27	-6.26	0.16	13.18	13.22	53.27	14.81	-1.45	13.90	6.85
16.28	-5.98	0.15	13.21	13.25	53.28	14.17	-1.43	13.38	6.06
16.29	-5.71	0.14	13.25	13.28	53.29	13.52	-1.40	12.86	5.27
16.3	-5.44	0.14	13.28	13.32	53.3	12.88	-1.37	12.34	4.48
16.31	-5.17	0.13	13.32	13.35	53.31	12.24	-1.35	11.82	3.70
16.32	-4.90	0.12	13.35	13.39	53.32	11.59	-1.32	11.29	2.91

16.33	-4.62	0.12	13.39	13.42	53.33	10.95	-1.29	10.77	2.12
16.34	-4.35	0.11	13.43	13.45	53.34	10.30	-1.27	10.25	1.33
16.35	-4.08	0.10	13.46	13.49	53.35	9.66	-1.24	9.73	0.54
16.36	-3.81	0.10	13.50	13.52	53.36	9.05	-1.21	8.95	0.14
16.37	-3.54	0.09	13.53	13.56	53.37	8.40	-1.17	7.86	0.03
16.38	-3.26	0.08	13.57	13.59	53.38	7.72	-1.13	6.70	0.01
16.39	-2.99	0.07	13.61	13.62	53.39	7.08	-1.09	5.56	0.00
16.4	-2.72	0.07	13.64	13.66	53.4	6.44	-1.05	4.41	0.00
16.41	-2.45	0.06	13.68	13.69	53.41	5.80	-1.01	3.26	0.00
16.42	-2.18	0.05	13.71	13.73	53.42	5.15	-0.97	2.11	0.00
16.43	-1.90	0.05	13.75	13.76	53.43	4.51	-0.93	0.97	0.00
16.44	-1.63	0.04	13.78	13.80	53.44	3.97	-0.87	0.24	0.00
16.45	-1.36	0.03	13.82	13.83	53.45	3.44	-0.76	0.06	0.00
16.46	-1.09	0.03	13.86	13.86	53.46	2.70	-0.60	0.02	0.00
16.47	-0.82	0.02	13.89	13.90	53.47	1.91	-0.43	0.00	0.00
16.48	-0.54	0.01	13.93	13.93	53.48	1.22	-0.28	0.00	0.00
16.49	-0.27	0.01	13.96	13.97	53.49	0.62	-0.14	0.00	0.00
16.5	0.00	0.00	14.00	14.00	53.5	0.01	0.00	0.00	0.00
16.51	0.27	-0.01	14.04	14.03	53.51	-0.62	0.14	0.00	0.00
16.52	0.54	-0.01	14.07	14.07	53.52	-1.62	0.23	0.00	0.00
16.53	0.82	-0.02	14.11	14.10	53.53	-2.03	0.26	0.00	0.00
16.54	1.09	-0.03	14.14	14.14	53.54	-2.49	0.30	0.00	0.00
16.55	1.36	-0.03	14.18	14.17	53.55	-3.24	0.34	0.00	0.00
16.56	1.63	-0.04	14.21	14.21	53.56	-3.88	0.38	0.00	0.00
16.57	1.90	-0.05	14.25	14.24	53.57	-4.50	0.42	0.00	0.00
16.58	2.18	-0.05	14.29	14.27	53.58	-5.15	0.46	0.00	0.00
16.59	2.45	-0.06	14.32	14.31	53.59	-5.80	0.50	0.00	0.00
16.6	2.72	-0.07	14.36	14.34	53.6	-6.48	0.54	0.00	0.00
16.61	2.99	-0.07	14.39	14.38	53.61	-7.09	0.56	0.00	0.00
16.62	3.26	-0.08	14.43	14.41	53.62	-7.72	0.59	0.00	0.00
16.63	3.54	-0.09	14.47	14.44	53.63	-8.38	0.61	0.00	0.00
16.64	3.81	-0.10	14.50	14.48	53.64	-9.02	0.64	0.00	0.00
16.65	4.08	-0.10	14.54	14.51	53.65	-9.66	0.67	0.00	0.00
16.66	4.35	-0.11	14.57	14.55	53.66	-10.30	0.69	0.00	0.00
16.67	4.62	-0.12	14.61	14.58	53.67	-10.95	0.72	0.00	0.00
16.68	4.90	-0.12	14.64	14.62	53.68	-11.59	0.74	0.00	0.00
16.69	5.17	-0.13	14.68	14.65	53.69	-12.24	0.77	0.00	0.00
16.7	5.44	-0.14	14.72	14.68	53.7	-12.88	0.80	0.00	0.00
16.71	5.71	-0.14	14.75	14.72	53.71	-13.52	0.82	0.00	0.00
16.72	5.98	-0.15	14.79	14.75	53.72	-14.17	0.85	0.00	0.00
16.73	6.26	-0.16	14.82	14.79	53.73	-14.81	0.88	0.00	0.00
16.74	6.53	-0.16	14.86	14.82	53.74	-15.46	0.90	0.00	0.00
16.75	6.80	-0.17	14.90	14.85	53.75	-16.10	0.93	0.00	0.00
16.76	7.07	-0.18	14.93	14.89	53.76	-16.74	0.95	0.00	0.00
16.77	7.34	-0.18	14.97	14.92	53.77	-17.39	0.98	0.00	0.00
16.78	7.62	-0.19	15.00	14.96	53.78	-18.03	1.01	0.00	0.00
16.79	7.89	-0.20	15.04	14.99	53.79	-18.68	1.03	0.00	0.00
16.8	8.16	-0.20	15.07	15.03	53.8	-19.32	1.06	0.00	0.00
16.81	8.43	-0.21	15.11	15.06	53.81	-19.96	1.08	0.00	0.00
16.82	8.70	-0.22	15.15	15.09	53.82	-20.61	1.11	0.00	0.00
16.83	8.98	-0.22	15.18	15.13	53.83	-21.25	1.14	0.00	0.00
16.84	9.25	-0.23	15.22	15.16	53.84	-21.90	1.16	0.00	0.00
16.85	9.52	-0.24	15.25	15.20	53.85	-22.54	1.19	0.00	0.00
16.86	9.79	-0.24	15.29	15.23	53.86	-23.18	1.22	0.00	0.00
16.87	10.06	-0.25	15.33	15.26	53.87	-23.83	1.24	0.00	0.00
16.88	10.34	-0.26	15.36	15.30	53.88	-24.47	1.27	0.00	0.00
16.89	10.61	-0.27	15.40	15.33	53.89	-25.12	1.29	0.00	0.00

16.9	10.88	-0.27	15.43	15.37	53.9	-25.76	1.32	0.00	0.00
16.91	11.15	-0.28	15.47	15.41	53.91	-26.40	1.35	0.00	0.00
16.92	11.42	-0.29	15.55	15.51	53.92	-27.05	1.37	0.00	0.00
16.93	11.70	-0.29	15.64	15.64	53.93	-27.69	1.40	0.00	0.00
16.94	11.97	-0.30	15.75	15.80	53.94	-28.34	1.42	0.00	0.00
16.95	12.24	-0.31	15.88	15.98	53.95	-28.89	1.47	0.00	0.00
16.96	12.51	-0.32	16.02	16.19	53.96	-29.38	1.56	0.00	0.00
16.97	12.78	-0.33	16.17	16.41	53.97	-30.11	1.71	0.00	0.00
16.98	13.06	-0.34	16.33	16.65	53.98	-30.93	1.88	0.00	0.00
16.99	13.33	-0.35	16.50	16.90	53.99	-31.63	2.03	0.00	0.00
17	13.60	-0.36	16.67	17.15	54	-32.24	2.16	0.00	0.00
17.01	13.45	-0.35	16.54	16.97	54.01	-32.37	2.16	0.00	0.00
17.02	13.02	-0.34	16.31	16.62	54.02	-30.73	2.10	0.00	0.00
17.03	12.78	-0.33	16.17	16.40	54.03	-30.14	2.08	0.00	0.00
17.04	12.53	-0.32	16.02	16.19	54.04	-29.77	2.06	0.00	0.00
17.05	12.23	-0.31	15.88	15.98	54.05	-28.94	2.03	0.00	0.00
17.06	11.97	-0.30	15.75	15.79	54.06	-28.34	2.00	0.00	0.00
17.07	11.70	-0.29	15.64	15.64	54.07	-27.71	1.98	0.00	0.00
17.08	11.42	-0.29	15.54	15.50	54.08	-27.05	1.95	0.00	0.00
17.09	11.15	-0.28	15.48	15.42	54.09	-26.41	1.93	0.00	0.00
17.1	10.88	-0.27	15.44	15.37	54.1	-25.77	1.90	0.00	0.00
17.11	10.61	-0.27	15.40	15.33	54.11	-25.13	1.87	0.00	0.00
17.12	10.34	-0.26	15.36	15.30	54.12	-24.48	1.85	0.00	0.00
17.13	10.06	-0.25	15.33	15.26	54.13	-23.84	1.82	0.00	0.00
17.14	9.79	-0.24	15.29	15.23	54.14	-23.20	1.79	0.00	0.00
17.15	9.52	-0.24	15.25	15.20	54.15	-22.56	1.77	0.00	0.00
17.16	9.25	-0.23	15.22	15.16	54.16	-21.91	1.74	0.00	0.00
17.17	8.98	-0.22	15.18	15.13	54.17	-21.27	1.72	0.00	0.00
17.18	8.70	-0.22	15.15	15.09	54.18	-20.63	1.69	0.00	0.00
17.19	8.43	-0.21	15.11	15.06	54.19	-19.98	1.66	0.00	0.00
17.2	8.16	-0.20	15.07	15.03	54.2	-19.34	1.64	0.00	0.00
17.21	7.89	-0.20	15.04	14.99	54.21	-18.70	1.61	0.00	0.00
17.22	7.62	-0.19	15.00	14.96	54.22	-18.05	1.59	0.00	0.00
17.23	7.34	-0.18	14.97	14.92	54.23	-17.41	1.56	0.00	0.00
17.24	7.07	-0.18	14.93	14.89	54.24	-16.77	1.53	0.00	0.00
17.25	6.80	-0.17	14.90	14.85	54.25	-16.13	1.51	0.00	0.00
17.26	6.53	-0.16	14.86	14.82	54.26	-15.48	1.48	0.00	0.00
17.27	6.26	-0.16	14.82	14.79	54.27	-14.84	1.46	0.00	0.00
17.28	5.98	-0.15	14.79	14.75	54.28	-14.20	1.43	0.00	0.00
17.29	5.71	-0.14	14.75	14.72	54.29	-13.55	1.40	0.00	0.00
17.3	5.44	-0.14	14.72	14.68	54.3	-12.91	1.38	0.00	0.00
17.31	5.17	-0.13	14.68	14.65	54.31	-12.27	1.35	0.00	0.00
17.32	4.90	-0.12	14.64	14.62	54.32	-11.62	1.33	0.00	0.00
17.33	4.62	-0.12	14.61	14.58	54.33	-10.98	1.30	0.00	0.00
17.34	4.35	-0.11	14.57	14.55	54.34	-10.34	1.27	0.00	0.00
17.35	4.08	-0.10	14.54	14.51	54.35	-9.70	1.25	0.00	0.00
17.36	3.81	-0.10	14.50	14.48	54.36	-9.08	1.22	0.00	0.00
17.37	3.54	-0.09	14.47	14.44	54.37	-8.43	1.18	0.00	0.00
17.38	3.26	-0.08	14.43	14.41	54.38	-7.76	1.14	0.00	0.00
17.39	2.99	-0.07	14.39	14.38	54.39	-7.12	1.10	0.00	0.00
17.4	2.72	-0.07	14.36	14.34	54.4	-6.48	1.06	0.00	0.00
17.41	2.45	-0.06	14.32	14.31	54.41	-5.84	1.02	0.00	0.00
17.42	2.18	-0.05	14.29	14.27	54.42	-5.19	0.98	0.00	0.00
17.43	1.90	-0.05	14.25	14.24	54.43	-4.55	0.94	0.00	0.00
17.44	1.63	-0.04	14.21	14.21	54.44	-4.01	0.88	0.00	0.00
17.45	1.36	-0.03	14.18	14.17	54.45	-3.49	0.77	0.00	0.00
17.46	1.09	-0.03	14.14	14.14	54.46	-2.76	0.61	0.00	0.00

17.47	0.82	-0.02	14.11	14.10	54.47	-1.96	0.44	0.00	0.00
17.48	0.54	-0.01	14.07	14.07	54.48	-1.27	0.29	0.00	0.00
17.49	0.27	-0.01	14.04	14.03	54.49	-0.66	0.15	0.00	0.00
17.5	0.00	0.00	14.00	14.00	54.5	-0.06	0.01	0.00	0.00
17.51	-0.27	0.01	13.96	13.97	54.51	0.57	-0.13	0.00	0.00
17.52	-0.54	0.01	13.93	13.93	54.52	1.22	-0.28	0.00	0.00
17.53	-0.82	0.02	13.89	13.90	54.53	1.89	-0.43	0.00	0.00
17.54	-1.09	0.03	13.86	13.86	54.54	2.54	-0.57	0.00	0.00
17.55	-1.36	0.03	13.82	13.83	54.55	3.17	-0.72	0.00	0.00
17.56	-1.63	0.04	13.78	13.80	54.56	3.83	-0.86	0.11	0.00
17.57	-1.90	0.05	13.75	13.76	54.57	4.77	-0.93	1.40	0.00
17.58	-2.18	0.05	13.71	13.73	54.58	5.16	-0.97	2.08	0.00
17.59	-2.45	0.06	13.68	13.69	54.59	5.66	-1.00	3.09	0.00
17.6	-2.72	0.07	13.64	13.66	54.6	6.41	-1.05	4.33	0.00
17.61	-2.99	0.07	13.61	13.62	54.61	7.04	-1.09	5.47	0.00
17.62	-3.26	0.08	13.57	13.59	54.62	7.66	-1.13	6.59	0.00
17.63	-3.54	0.09	13.53	13.56	54.63	8.31	-1.17	7.75	0.00
17.64	-3.81	0.10	13.50	13.52	54.64	8.96	-1.21	8.90	0.00
17.65	-4.08	0.10	13.46	13.49	54.65	9.64	-1.24	9.64	0.59
17.66	-4.35	0.11	13.43	13.45	54.66	10.24	-1.27	10.18	1.27
17.67	-4.62	0.12	13.39	13.42	54.67	10.87	-1.29	10.71	2.04
17.68	-4.90	0.12	13.35	13.39	54.68	11.53	-1.32	11.24	2.83
17.69	-5.17	0.13	13.32	13.35	54.69	12.17	-1.34	11.76	3.61
17.7	-5.44	0.14	13.28	13.32	54.7	12.81	-1.37	12.28	4.40
17.71	-5.71	0.14	13.25	13.28	54.71	13.45	-1.40	12.80	5.19
17.72	-5.98	0.15	13.21	13.25	54.72	14.10	-1.42	13.32	5.97
17.73	-6.26	0.16	13.18	13.22	54.73	14.74	-1.45	13.84	6.76
17.74	-6.53	0.16	13.14	13.18	54.74	15.38	-1.47	14.37	7.55
17.75	-6.80	0.17	13.10	13.15	54.75	16.03	-1.50	14.89	8.33
17.76	-7.07	0.18	13.07	13.11	54.76	16.67	-1.53	15.41	9.12
17.77	-7.34	0.18	13.03	13.08	54.77	17.31	-1.55	15.93	9.91
17.78	-7.62	0.19	13.00	13.04	54.78	17.95	-1.58	16.45	10.70
17.79	-7.89	0.20	12.96	13.01	54.79	18.60	-1.61	16.97	11.48
17.8	-8.16	0.20	12.92	12.98	54.8	19.24	-1.63	17.49	12.27
17.81	-8.43	0.21	12.89	12.94	54.81	19.88	-1.66	18.01	13.06
17.82	-8.70	0.22	12.85	12.91	54.82	20.53	-1.68	18.53	13.84
17.83	-8.98	0.22	12.82	12.87	54.83	21.17	-1.71	19.05	14.63
17.84	-9.25	0.23	12.78	12.84	54.84	21.81	-1.74	19.58	15.42
17.85	-9.52	0.24	12.75	12.81	54.85	22.46	-1.76	20.10	16.21
17.86	-9.79	0.24	12.71	12.77	54.86	23.10	-1.79	20.62	16.99
17.87	-10.06	0.25	12.67	12.74	54.87	23.74	-1.81	21.14	17.78
17.88	-10.34	0.26	12.64	12.70	54.88	24.38	-1.84	21.66	18.57
17.89	-10.61	0.27	12.60	12.67	54.89	25.03	-1.87	22.18	19.35
17.9	-10.88	0.27	12.57	12.64	54.9	25.67	-1.89	22.70	20.14
17.91	-11.15	0.28	12.53	12.60	54.91	26.31	-1.92	23.22	20.93
17.92	-11.42	0.29	12.49	12.56	54.92	26.96	-1.94	23.74	21.72
17.93	-11.70	0.29	12.44	12.51	54.93	27.60	-1.97	24.26	22.50
17.94	-11.97	0.30	12.40	12.46	54.94	28.24	-2.00	24.79	23.29
17.95	-12.24	0.31	12.35	12.41	54.95	28.89	-2.02	25.31	24.08
17.96	-12.51	0.32	12.30	12.35	54.96	29.53	-2.05	25.83	24.86
17.97	-12.78	0.33	12.25	12.29	54.97	30.17	-2.08	26.35	25.65
17.98	-13.06	0.34	12.20	12.23	54.98	30.81	-2.10	26.87	26.44
17.99	-13.33	0.35	12.15	12.17	54.99	31.46	-2.13	27.39	27.23
18	-13.60	0.36	12.09	12.11	55	32.06	-2.16	27.85	27.92
18.01	-13.45	0.35	12.13	12.16	55.01	31.82	-2.15	27.56	27.48
18.02	-13.02	0.34	12.20	12.24	55.02	30.73	-2.11	26.79	26.31
18.03	-12.78	0.33	12.25	12.29	55.03	30.13	-2.08	26.31	25.58

18.04	-12.53	0.32	12.30	12.35	55.04	29.59	-2.06	25.83	24.86
18.05	-12.23	0.31	12.35	12.41	55.05	28.87	-2.03	25.28	24.03
18.06	-11.97	0.30	12.40	12.46	55.06	28.24	-2.00	24.76	23.24
18.07	-11.70	0.29	12.44	12.51	55.07	27.61	-1.98	24.25	22.47
18.08	-11.42	0.29	12.49	12.56	55.08	26.96	-1.95	23.72	21.68
18.09	-11.15	0.28	12.53	12.60	55.09	26.32	-1.93	23.20	20.89
18.1	-10.88	0.27	12.57	12.63	55.1	25.68	-1.90	22.68	20.11
18.11	-10.61	0.27	12.60	12.67	55.11	25.04	-1.87	22.16	19.32
18.12	-10.34	0.26	12.64	12.70	55.12	24.40	-1.85	21.64	18.53
18.13	-10.06	0.25	12.67	12.74	55.13	23.75	-1.82	21.12	17.75
18.14	-9.79	0.24	12.71	12.77	55.14	23.11	-1.80	20.60	16.96
18.15	-9.52	0.24	12.75	12.81	55.15	22.47	-1.77	20.08	16.18
18.16	-9.25	0.23	12.78	12.84	55.16	21.83	-1.74	19.56	15.39
18.17	-8.98	0.22	12.82	12.87	55.17	21.19	-1.72	19.04	14.60
18.18	-8.70	0.22	12.85	12.91	55.18	20.54	-1.69	18.52	13.82
18.19	-8.43	0.21	12.89	12.94	55.19	19.90	-1.67	18.00	13.03
18.2	-8.16	0.20	12.92	12.98	55.2	19.26	-1.64	17.48	12.25
18.21	-7.89	0.20	12.96	13.01	55.21	18.62	-1.61	16.96	11.46
18.22	-7.62	0.19	13.00	13.04	55.22	17.98	-1.59	16.44	10.68
18.23	-7.34	0.18	13.03	13.08	55.23	17.33	-1.56	15.92	9.89
18.24	-7.07	0.18	13.07	13.11	55.24	16.69	-1.54	15.40	9.10
18.25	-6.80	0.17	13.10	13.15	55.25	16.05	-1.51	14.88	8.32
18.26	-6.53	0.16	13.14	13.18	55.26	15.41	-1.48	14.36	7.53
18.27	-6.26	0.16	13.18	13.22	55.27	14.77	-1.46	13.84	6.75
18.28	-5.98	0.15	13.21	13.25	55.28	14.12	-1.43	13.32	5.96
18.29	-5.71	0.14	13.25	13.28	55.29	13.48	-1.40	12.80	5.17
18.3	-5.44	0.14	13.28	13.32	55.3	12.84	-1.38	12.28	4.39
18.31	-5.17	0.13	13.32	13.35	55.31	12.20	-1.35	11.76	3.60
18.32	-4.90	0.12	13.35	13.39	55.32	11.56	-1.33	11.24	2.82
18.33	-4.62	0.12	13.39	13.42	55.33	10.91	-1.30	10.72	2.03
18.34	-4.35	0.11	13.43	13.45	55.34	10.27	-1.27	10.20	1.24
18.35	-4.08	0.10	13.46	13.49	55.35	9.63	-1.25	9.68	0.46
18.36	-3.81	0.10	13.50	13.52	55.36	9.02	-1.22	8.85	0.11
18.37	-3.54	0.09	13.53	13.56	55.37	8.37	-1.18	7.75	0.03
18.38	-3.26	0.08	13.57	13.59	55.38	7.70	-1.14	6.59	0.01
18.39	-2.99	0.07	13.61	13.62	55.39	7.06	-1.10	5.45	0.00
18.4	-2.72	0.07	13.64	13.66	55.4	6.42	-1.06	4.31	0.00
18.41	-2.45	0.06	13.68	13.69	55.41	5.78	-1.02	3.16	0.00
18.42	-2.18	0.05	13.71	13.73	55.42	5.14	-0.98	2.02	0.00
18.43	-1.90	0.05	13.75	13.76	55.43	4.50	-0.94	0.88	0.00
18.44	-1.63	0.04	13.78	13.80	55.44	3.98	-0.87	0.22	0.00
18.45	-1.36	0.03	13.82	13.83	55.45	3.43	-0.76	0.06	0.00
18.46	-1.09	0.03	13.86	13.86	55.46	2.64	-0.59	0.00	0.00
18.47	-0.82	0.02	13.89	13.90	55.47	1.84	-0.42	0.00	0.00
18.48	-0.54	0.01	13.93	13.93	55.48	1.20	-0.28	0.00	0.00
18.49	-0.27	0.01	13.96	13.97	55.49	0.65	-0.15	0.00	0.00
18.5	0.00	0.00	14.00	14.00	55.5	0.05	-0.01	0.00	0.00
18.51	0.27	-0.01	14.04	14.03	55.51	-0.61	0.14	0.00	0.00
18.52	0.54	-0.01	14.07	14.07	55.52	-1.29	0.29	0.00	0.00
18.53	0.82	-0.02	14.11	14.10	55.53	-1.96	0.44	0.00	0.00
18.54	1.09	-0.03	14.14	14.14	55.54	-2.58	0.58	0.00	0.00
18.55	1.36	-0.03	14.18	14.17	55.55	-3.20	0.72	0.00	0.00
18.56	1.63	-0.04	14.21	14.21	55.56	-3.88	0.86	0.00	0.00
18.57	1.90	-0.05	14.25	14.24	55.57	-4.81	0.94	0.00	0.00
18.58	2.18	-0.05	14.29	14.27	55.58	-5.20	0.97	0.00	0.00
18.59	2.45	-0.06	14.32	14.31	55.59	-5.70	1.01	0.00	0.00
18.6	2.72	-0.07	14.36	14.34	55.6	-6.45	1.05	0.00	0.00

18.61	2.99	-0.07	14.39	14.38	55.61	-7.07	1.09	0.00	0.00
18.62	3.26	-0.08	14.43	14.41	55.62	-7.70	1.13	0.00	0.00
18.63	3.54	-0.09	14.47	14.44	55.63	-8.34	1.17	0.00	0.00
18.64	3.81	-0.10	14.50	14.48	55.64	-8.99	1.21	0.00	0.00
18.65	4.08	-0.10	14.54	14.51	55.65	-9.68	1.24	0.00	0.00
18.66	4.35	-0.11	14.57	14.55	55.66	-10.28	1.27	0.00	0.00
18.67	4.62	-0.12	14.61	14.58	55.67	-10.91	1.30	0.00	0.00
18.68	4.90	-0.12	14.64	14.62	55.68	-11.56	1.32	0.00	0.00
18.69	5.17	-0.13	14.68	14.65	55.69	-12.20	1.35	0.00	0.00
18.7	5.44	-0.14	14.72	14.68	55.7	-12.84	1.37	0.00	0.00
18.71	5.71	-0.14	14.75	14.72	55.71	-13.48	1.40	0.00	0.00
18.72	5.98	-0.15	14.79	14.75	55.72	-14.12	1.43	0.00	0.00
18.73	6.26	-0.16	14.82	14.79	55.73	-14.77	1.45	0.00	0.00
18.74	6.53	-0.16	14.86	14.82	55.74	-15.41	1.48	0.00	0.00
18.75	6.80	-0.17	14.90	14.85	55.75	-16.05	1.50	0.00	0.00
18.76	7.07	-0.18	14.93	14.89	55.76	-16.69	1.53	0.00	0.00
18.77	7.34	-0.18	14.97	14.92	55.77	-17.33	1.56	0.00	0.00
18.78	7.62	-0.19	15.00	14.96	55.78	-17.98	1.58	0.00	0.00
18.79	7.89	-0.20	15.04	14.99	55.79	-18.62	1.61	0.00	0.00
18.8	8.16	-0.20	15.07	15.03	55.8	-19.26	1.64	0.00	0.00
18.81	8.43	-0.21	15.11	15.06	55.81	-19.90	1.66	0.00	0.00
18.82	8.70	-0.22	15.15	15.09	55.82	-20.54	1.69	0.00	0.00
18.83	8.98	-0.22	15.18	15.13	55.83	-21.19	1.71	0.00	0.00
18.84	9.25	-0.23	15.22	15.16	55.84	-21.83	1.74	0.00	0.00
18.85	9.52	-0.24	15.25	15.20	55.85	-22.47	1.77	0.00	0.00
18.86	9.79	-0.24	15.29	15.23	55.86	-23.11	1.79	0.00	0.00
18.87	10.06	-0.25	15.33	15.26	55.87	-23.75	1.82	0.00	0.00
18.88	10.34	-0.26	15.36	15.30	55.88	-24.40	1.84	0.00	0.00
18.89	10.61	-0.27	15.40	15.33	55.89	-25.04	1.87	0.00	0.00
18.9	10.88	-0.27	15.43	15.37	55.9	-25.68	1.90	0.00	0.00
18.91	11.15	-0.28	15.47	15.41	55.91	-26.32	1.92	0.00	0.00
18.92	11.42	-0.29	15.55	15.51	55.92	-26.96	1.95	0.00	0.00
18.93	11.70	-0.29	15.64	15.64	55.93	-27.61	1.97	0.00	0.00
18.94	11.97	-0.30	15.75	15.80	55.94	-28.25	2.00	0.00	0.00
18.95	12.24	-0.31	15.88	15.98	55.95	-28.89	2.03	0.00	0.00
18.96	12.51	-0.32	16.02	16.19	55.96	-29.53	2.05	0.00	0.00
18.97	12.78	-0.33	16.17	16.41	55.97	-30.17	2.08	0.00	0.00
18.98	13.06	-0.34	16.33	16.65	55.98	-30.82	2.10	0.00	0.00
18.99	13.33	-0.35	16.50	16.90	55.99	-31.46	2.13	0.00	0.00
19	13.60	-0.36	16.67	17.15	56	-32.07	2.16	0.00	0.00
19.01	13.45	-0.35	16.54	16.97	56.01	-31.78	2.15	0.00	0.00
19.02	13.02	-0.34	16.31	16.62	56.02	-30.65	2.10	0.00	0.00
19.03	12.78	-0.33	16.17	16.40	56.03	-30.01	2.08	0.00	0.00
19.04	12.53	-0.32	16.02	16.19	56.04	-29.43	2.05	0.00	0.00
19.05	12.23	-0.31	15.88	15.98	56.05	-28.68	2.02	0.00	0.00
19.06	11.97	-0.30	15.75	15.79	56.06	-28.01	2.00	0.00	0.00
19.07	11.70	-0.29	15.64	15.64	56.07	-27.34	1.97	0.00	0.00
19.08	11.42	-0.29	15.54	15.50	56.08	-26.65	1.94	0.00	0.00
19.09	11.15	-0.28	15.48	15.42	56.09	-25.97	1.91	0.00	0.00
19.1	10.88	-0.27	15.44	15.37	56.1	-25.29	1.89	0.00	0.00
19.11	10.61	-0.27	15.40	15.33	56.11	-24.61	1.86	0.00	0.00
19.12	10.34	-0.26	15.36	15.30	56.12	-23.93	1.83	0.00	0.00
19.13	10.06	-0.25	15.33	15.26	56.13	-23.25	1.80	0.00	0.00
19.14	9.79	-0.24	15.29	15.23	56.14	-22.57	1.77	0.00	0.00
19.15	9.52	-0.24	15.25	15.20	56.15	-21.89	1.75	0.00	0.00
19.16	9.25	-0.23	15.22	15.16	56.16	-21.20	1.72	0.00	0.00
19.17	8.98	-0.22	15.18	15.13	56.17	-20.52	1.69	0.00	0.00

19.18	8.70	-0.22	15.15	15.09	56.18	-19.84	1.66	0.00	0.00
19.19	8.43	-0.21	15.11	15.06	56.19	-19.16	1.64	0.00	0.00
19.2	8.16	-0.20	15.07	15.03	56.2	-18.48	1.61	0.00	0.00
19.21	7.89	-0.20	15.04	14.99	56.21	-17.80	1.58	0.00	0.00
19.22	7.62	-0.19	15.00	14.96	56.22	-17.12	1.55	0.00	0.00
19.23	7.34	-0.18	14.97	14.92	56.23	-16.44	1.53	0.00	0.00
19.24	7.07	-0.18	14.93	14.89	56.24	-15.76	1.50	0.00	0.00
19.25	6.80	-0.17	14.90	14.85	56.25	-15.08	1.47	0.00	0.00
19.26	6.53	-0.16	14.86	14.82	56.26	-14.39	1.44	0.00	0.00
19.27	6.26	-0.16	14.82	14.79	56.27	-13.71	1.42	0.00	0.00
19.28	5.98	-0.15	14.79	14.75	56.28	-13.03	1.39	0.00	0.00
19.29	5.71	-0.14	14.75	14.72	56.29	-12.35	1.36	0.00	0.00
19.3	5.44	-0.14	14.72	14.68	56.3	-11.67	1.33	0.00	0.00
19.31	5.17	-0.13	14.68	14.65	56.31	-10.99	1.30	0.00	0.00
19.32	4.90	-0.12	14.64	14.62	56.32	-10.31	1.28	0.00	0.00
19.33	4.62	-0.12	14.61	14.58	56.33	-9.63	1.25	0.00	0.00
19.34	4.35	-0.11	14.57	14.55	56.34	-8.99	1.21	0.00	0.00
19.35	4.08	-0.10	14.54	14.51	56.35	-8.28	1.17	0.00	0.00
19.36	3.81	-0.10	14.50	14.48	56.36	-7.58	1.13	0.00	0.00
19.37	3.54	-0.09	14.47	14.44	56.37	-6.90	1.09	0.00	0.00
19.38	3.26	-0.08	14.43	14.41	56.38	-6.22	1.05	0.00	0.00
19.39	2.99	-0.07	14.39	14.38	56.39	-5.54	1.00	0.00	0.00
19.4	2.72	-0.07	14.36	14.34	56.4	-4.86	0.96	0.00	0.00
19.41	2.45	-0.06	14.32	14.31	56.41	-4.20	0.91	0.00	0.00
19.42	2.18	-0.05	14.29	14.27	56.42	-3.73	0.82	0.00	0.00
19.43	1.90	-0.05	14.25	14.24	56.43	-3.03	0.67	0.00	0.00
19.44	1.63	-0.04	14.21	14.21	56.44	-2.15	0.49	0.00	0.00
19.45	1.36	-0.03	14.18	14.17	56.45	-1.38	0.32	0.00	0.00
19.46	1.09	-0.03	14.14	14.14	56.46	-0.72	0.17	0.00	0.00
19.47	0.82	-0.02	14.11	14.10	56.47	-0.10	0.02	0.00	0.00
19.48	0.54	-0.01	14.07	14.07	56.48	0.57	-0.13	0.00	0.00
19.49	0.27	-0.01	14.04	14.03	56.49	1.24	-0.28	0.00	0.00
19.5	0.00	0.00	14.00	14.00	56.5	1.96	-0.44	0.00	0.00
19.51	-0.27	0.01	13.96	13.97	56.51	2.66	-0.60	0.00	0.00
19.52	-0.54	0.01	13.93	13.93	56.52	3.32	-0.75	0.00	0.00
19.53	-0.82	0.02	13.89	13.90	56.53	4.10	-0.88	0.43	0.00
19.54	-1.09	0.03	13.86	13.86	56.54	4.97	-0.96	1.60	0.00
19.55	-1.36	0.03	13.82	13.83	56.55	5.43	-0.99	2.50	0.00
19.56	-1.63	0.04	13.78	13.80	56.56	5.97	-1.03	3.55	0.00
19.57	-1.90	0.05	13.75	13.76	56.57	6.72	-1.08	4.85	0.00
19.58	-2.18	0.05	13.71	13.73	56.58	7.42	-1.12	6.08	0.00
19.59	-2.45	0.06	13.68	13.69	56.59	8.07	-1.16	7.26	0.00
19.6	-2.72	0.07	13.64	13.66	56.6	8.76	-1.20	8.48	0.00
19.61	-2.99	0.07	13.61	13.62	56.61	9.48	-1.24	9.42	0.41
19.62	-3.26	0.08	13.57	13.59	56.62	10.14	-1.27	10.06	1.12
19.63	-3.54	0.09	13.53	13.56	56.63	10.80	-1.30	10.62	1.90
19.64	-3.81	0.10	13.50	13.52	56.64	11.49	-1.32	11.18	2.73
19.65	-4.08	0.10	13.46	13.49	56.65	12.17	-1.35	11.73	3.56
19.66	-4.35	0.11	13.43	13.45	56.66	12.85	-1.38	12.28	4.39
19.67	-4.62	0.12	13.39	13.42	56.67	13.53	-1.41	12.83	5.23
19.68	-4.90	0.12	13.35	13.39	56.68	14.21	-1.43	13.39	6.06
19.69	-5.17	0.13	13.32	13.35	56.69	14.89	-1.46	13.94	6.90
19.7	-5.44	0.14	13.28	13.32	56.7	15.57	-1.49	14.49	7.73
19.71	-5.71	0.14	13.25	13.28	56.71	16.25	-1.52	15.04	8.56
19.72	-5.98	0.15	13.21	13.25	56.72	16.93	-1.54	15.59	9.40
19.73	-6.26	0.16	13.18	13.22	56.73	17.61	-1.57	16.14	10.23
19.74	-6.53	0.16	13.14	13.18	56.74	18.29	-1.60	16.70	11.06

19.75	-6.80	0.17	13.10	13.15	56.75	18.98	-1.63	17.25	11.90
19.76	-7.07	0.18	13.07	13.11	56.76	19.66	-1.66	17.80	12.73
19.77	-7.34	0.18	13.03	13.08	56.77	20.34	-1.68	18.35	13.57
19.78	-7.62	0.19	13.00	13.04	56.78	21.02	-1.71	18.90	14.40
19.79	-7.89	0.20	12.96	13.01	56.79	21.70	-1.74	19.46	15.23
19.8	-8.16	0.20	12.92	12.98	56.8	22.38	-1.77	20.01	16.07
19.81	-8.43	0.21	12.89	12.94	56.81	23.06	-1.79	20.56	16.90
19.82	-8.70	0.22	12.85	12.91	56.82	23.74	-1.82	21.11	17.73
19.83	-8.98	0.22	12.82	12.87	56.83	24.42	-1.85	21.66	18.57
19.84	-9.25	0.23	12.78	12.84	56.84	25.10	-1.88	22.21	19.40
19.85	-9.52	0.24	12.75	12.81	56.85	25.79	-1.90	22.77	20.23
19.86	-9.79	0.24	12.71	12.77	56.86	26.47	-1.93	23.32	21.07
19.87	-10.06	0.25	12.67	12.74	56.87	27.15	-1.96	23.87	21.90
19.88	-10.34	0.26	12.64	12.70	56.88	27.83	-1.99	24.42	22.74
19.89	-10.61	0.27	12.60	12.67	56.89	28.51	-2.01	24.97	23.57
19.9	-10.88	0.27	12.57	12.64	56.9	29.19	-2.04	25.53	24.40
19.91	-11.15	0.28	12.53	12.60	56.91	29.87	-2.07	26.08	25.24
19.92	-11.42	0.29	12.49	12.56	56.92	30.55	-2.10	26.63	26.07
19.93	-11.70	0.29	12.44	12.51	56.93	31.23	-2.13	27.18	26.90
19.94	-11.97	0.30	12.40	12.46	56.94	31.91	-2.15	27.73	27.74
19.95	-12.24	0.31	12.35	12.41	56.95	32.38	-2.22	27.94	28.06
19.96	-12.51	0.32	12.30	12.35	56.96	33.04	-2.35	28.01	28.23
19.97	-12.78	0.33	12.25	12.29	56.97	33.98	-2.51	28.05	28.62
19.98	-13.06	0.34	12.20	12.23	56.98	34.74	-2.64	28.07	28.95
19.99	-13.33	0.35	12.15	12.17	56.99	35.35	-2.76	28.09	29.22
20	-13.60	0.36	12.09	12.11	57	35.97	-2.88	28.11	29.50
20.01	-13.45	0.35	12.13	12.16	57.01	36.06	-2.87	28.00	29.34
20.02	-13.02	0.34	12.20	12.24	57.02	34.39	-2.81	26.83	27.56
20.03	-12.78	0.33	12.25	12.29	57.03	33.71	-2.79	26.35	26.83
20.04	-12.53	0.32	12.30	12.35	57.04	33.26	-2.76	25.84	26.08
20.05	-12.23	0.31	12.35	12.41	57.05	32.36	-2.73	25.20	25.10
20.06	-11.97	0.30	12.40	12.46	57.06	31.67	-2.70	24.62	24.23
20.07	-11.70	0.29	12.44	12.51	57.07	30.97	-2.67	24.05	23.37
20.08	-11.42	0.29	12.49	12.56	57.08	30.24	-2.64	23.46	22.48
20.09	-11.15	0.28	12.53	12.60	57.09	29.52	-2.61	22.88	21.60
20.1	-10.88	0.27	12.57	12.63	57.1	28.80	-2.59	22.29	20.72
20.11	-10.61	0.27	12.60	12.67	57.11	28.08	-2.56	21.71	19.83
20.12	-10.34	0.26	12.64	12.70	57.12	27.36	-2.53	21.13	18.95
20.13	-10.06	0.25	12.67	12.74	57.13	26.64	-2.50	20.54	18.07
20.14	-9.79	0.24	12.71	12.77	57.14	25.92	-2.47	19.96	17.19
20.15	-9.52	0.24	12.75	12.81	57.15	25.20	-2.44	19.38	16.31
20.16	-9.25	0.23	12.78	12.84	57.16	24.48	-2.41	18.79	15.43
20.17	-8.98	0.22	12.82	12.87	57.17	23.76	-2.38	18.21	14.55
20.18	-8.70	0.22	12.85	12.91	57.18	23.04	-2.35	17.63	13.66
20.19	-8.43	0.21	12.89	12.94	57.19	22.32	-2.32	17.04	12.78
20.2	-8.16	0.20	12.92	12.98	57.2	21.60	-2.29	16.46	11.90
20.21	-7.89	0.20	12.96	13.01	57.21	20.88	-2.26	15.88	11.02
20.22	-7.62	0.19	13.00	13.04	57.22	20.16	-2.23	15.29	10.14
20.23	-7.34	0.18	13.03	13.08	57.23	19.44	-2.21	14.71	9.26
20.24	-7.07	0.18	13.07	13.11	57.24	18.72	-2.18	14.13	8.38
20.25	-6.80	0.17	13.10	13.15	57.25	18.00	-2.15	13.54	7.49
20.26	-6.53	0.16	13.14	13.18	57.26	17.28	-2.12	12.96	6.61
20.27	-6.26	0.16	13.18	13.22	57.27	16.56	-2.09	12.38	5.73
20.28	-5.98	0.15	13.21	13.25	57.28	15.84	-2.06	11.79	4.85
20.29	-5.71	0.14	13.25	13.28	57.29	15.12	-2.03	11.21	3.97
20.3	-5.44	0.14	13.28	13.32	57.3	14.40	-2.00	10.63	3.09
20.31	-5.17	0.13	13.32	13.35	57.31	13.68	-1.97	10.04	2.21

20.32	-4.90	0.12	13.35	13.39	57.32	12.96	-1.94	9.46	1.33
20.33	-4.62	0.12	13.39	13.42	57.33	12.24	-1.91	8.88	0.44
20.34	-4.35	0.11	13.43	13.45	57.34	11.56	-1.88	7.92	0.11
20.35	-4.08	0.10	13.46	13.49	57.35	10.82	-1.83	6.65	0.03
20.36	-3.81	0.10	13.50	13.52	57.36	10.07	-1.79	5.36	0.01
20.37	-3.54	0.09	13.53	13.56	57.37	9.36	-1.74	4.09	0.00
20.38	-3.26	0.08	13.57	13.59	57.38	8.64	-1.70	2.81	0.00
20.39	-2.99	0.07	13.61	13.62	57.39	7.92	-1.65	1.52	0.00
20.4	-2.72	0.07	13.64	13.66	57.4	7.24	-1.60	0.38	0.00
20.41	-2.45	0.06	13.68	13.69	57.41	6.73	-1.50	0.10	0.00
20.42	-2.18	0.05	13.71	13.73	57.42	5.98	-1.33	0.02	0.00
20.43	-1.90	0.05	13.75	13.76	57.43	5.05	-1.14	0.01	0.00
20.44	-1.63	0.04	13.78	13.80	57.44	4.24	-0.96	0.00	0.00
20.45	-1.36	0.03	13.82	13.83	57.45	3.54	-0.80	0.00	0.00
20.46	-1.09	0.03	13.86	13.86	57.46	2.89	-0.65	0.00	0.00
20.47	-0.82	0.02	13.89	13.90	57.47	2.19	-0.49	0.00	0.00
20.48	-0.54	0.01	13.93	13.93	57.48	1.45	-0.33	0.00	0.00
20.49	-0.27	0.01	13.96	13.97	57.49	0.71	-0.16	0.00	0.00
20.5	0.00	0.00	14.00	14.00	57.5	-0.02	0.00	0.00	0.00
20.51	0.27	-0.01	14.04	14.03	57.51	-0.72	0.16	0.00	0.00
20.52	0.54	-0.01	14.07	14.07	57.52	-1.42	0.32	0.00	0.00
20.53	0.82	-0.02	14.11	14.10	57.53	-2.16	0.49	0.00	0.00
20.54	1.09	-0.03	14.14	14.14	57.54	-2.89	0.65	0.00	0.00
20.55	1.36	-0.03	14.18	14.17	57.55	-3.60	0.81	0.00	0.00
20.56	1.63	-0.04	14.21	14.21	57.56	-4.62	0.92	0.00	0.00
20.57	1.90	-0.05	14.25	14.24	57.57	-5.20	0.97	0.00	0.00
20.58	2.18	-0.05	14.29	14.27	57.58	-5.70	1.01	0.00	0.00
20.59	2.45	-0.06	14.32	14.31	57.59	-6.48	1.06	0.00	0.00
20.6	2.72	-0.07	14.36	14.34	57.6	-7.22	1.11	0.00	0.00
20.61	2.99	-0.07	14.39	14.38	57.61	-7.92	1.15	0.00	0.00
20.62	3.26	-0.08	14.43	14.41	57.62	-8.64	1.20	0.00	0.00
20.63	3.54	-0.09	14.47	14.44	57.63	-9.39	1.24	0.00	0.00
20.64	3.81	-0.10	14.50	14.48	57.64	-10.11	1.27	0.00	0.00
20.65	4.08	-0.10	14.54	14.51	57.65	-10.80	1.30	0.00	0.00
20.66	4.35	-0.11	14.57	14.55	57.66	-11.52	1.33	0.00	0.00
20.67	4.62	-0.12	14.61	14.58	57.67	-12.24	1.36	0.00	0.00
20.68	4.90	-0.12	14.64	14.62	57.68	-12.96	1.38	0.00	0.00
20.69	5.17	-0.13	14.68	14.65	57.69	-13.68	1.41	0.00	0.00
20.7	5.44	-0.14	14.72	14.68	57.7	-14.40	1.44	0.00	0.00
20.71	5.71	-0.14	14.75	14.72	57.71	-15.12	1.47	0.00	0.00
20.72	5.98	-0.15	14.79	14.75	57.72	-15.84	1.50	0.00	0.00
20.73	6.26	-0.16	14.82	14.79	57.73	-16.56	1.53	0.00	0.00
20.74	6.53	-0.16	14.86	14.82	57.74	-17.28	1.56	0.00	0.00
20.75	6.80	-0.17	14.90	14.85	57.75	-18.00	1.59	0.00	0.00
20.76	7.07	-0.18	14.93	14.89	57.76	-18.72	1.62	0.00	0.00
20.77	7.34	-0.18	14.97	14.92	57.77	-19.44	1.65	0.00	0.00
20.78	7.62	-0.19	15.00	14.96	57.78	-20.16	1.68	0.00	0.00
20.79	7.89	-0.20	15.04	14.99	57.79	-20.88	1.71	0.00	0.00
20.8	8.16	-0.20	15.07	15.03	57.8	-21.60	1.74	0.00	0.00
20.81	8.43	-0.21	15.11	15.06	57.81	-22.32	1.76	0.00	0.00
20.82	8.70	-0.22	15.15	15.09	57.82	-23.04	1.79	0.00	0.00
20.83	8.98	-0.22	15.18	15.13	57.83	-23.76	1.82	0.00	0.00
20.84	9.25	-0.23	15.22	15.16	57.84	-24.48	1.85	0.00	0.00
20.85	9.52	-0.24	15.25	15.20	57.85	-25.20	1.88	0.00	0.00
20.86	9.79	-0.24	15.29	15.23	57.86	-25.92	1.91	0.00	0.00
20.87	10.06	-0.25	15.33	15.26	57.87	-26.64	1.94	0.00	0.00
20.88	10.34	-0.26	15.36	15.30	57.88	-27.36	1.97	0.00	0.00

20.89	10.61	-0.27	15.40	15.33	57.89	-28.08	2.00	0.00	0.00
20.9	10.88	-0.27	15.43	15.37	57.9	-28.80	2.03	0.00	0.00
20.91	11.15	-0.28	15.47	15.41	57.91	-29.52	2.06	0.00	0.00
20.92	11.42	-0.29	15.55	15.51	57.92	-30.24	2.09	0.00	0.00
20.93	11.70	-0.29	15.64	15.64	57.93	-30.96	2.12	0.00	0.00
20.94	11.97	-0.30	15.75	15.80	57.94	-31.68	2.15	0.00	0.00
20.95	12.24	-0.31	15.88	15.98	57.95	-32.25	2.20	0.00	0.00
20.96	12.51	-0.32	16.02	16.19	57.96	-32.85	2.32	0.00	0.00
20.97	12.78	-0.33	16.17	16.41	57.97	-33.79	2.48	0.00	0.00
20.98	13.06	-0.34	16.33	16.65	57.98	-34.65	2.63	0.00	0.00
20.99	13.33	-0.35	16.50	16.90	57.99	-35.33	2.76	0.00	0.00
21	13.60	-0.36	16.67	17.15	58	-35.99	2.88	0.00	0.00
21.01	13.45	-0.35	16.54	16.97	58.01	-36.08	2.87	0.00	0.00
21.02	13.02	-0.34	16.31	16.62	58.02	-34.38	2.81	0.00	0.00
21.03	12.78	-0.33	16.17	16.40	58.03	-33.71	2.79	0.00	0.00
21.04	12.53	-0.32	16.02	16.19	58.04	-33.26	2.77	0.00	0.00
21.05	12.23	-0.31	15.88	15.98	58.05	-32.36	2.73	0.00	0.00
21.06	11.97	-0.30	15.75	15.79	58.06	-31.67	2.70	0.00	0.00
21.07	11.70	-0.29	15.64	15.64	58.07	-30.97	2.68	0.00	0.00
21.08	11.42	-0.29	15.54	15.50	58.08	-30.24	2.65	0.00	0.00
21.09	11.15	-0.28	15.48	15.42	58.09	-29.52	2.62	0.00	0.00
21.1	10.88	-0.27	15.44	15.37	58.1	-28.80	2.59	0.00	0.00
21.11	10.61	-0.27	15.40	15.33	58.11	-28.08	2.56	0.00	0.00
21.12	10.34	-0.26	15.36	15.30	58.12	-27.36	2.53	0.00	0.00
21.13	10.06	-0.25	15.33	15.26	58.13	-26.64	2.50	0.00	0.00
21.14	9.79	-0.24	15.29	15.23	58.14	-25.92	2.47	0.00	0.00
21.15	9.52	-0.24	15.25	15.20	58.15	-25.20	2.44	0.00	0.00
21.16	9.25	-0.23	15.22	15.16	58.16	-24.48	2.41	0.00	0.00
21.17	8.98	-0.22	15.18	15.13	58.17	-23.76	2.38	0.00	0.00
21.18	8.70	-0.22	15.15	15.09	58.18	-23.04	2.35	0.00	0.00
21.19	8.43	-0.21	15.11	15.06	58.19	-22.32	2.32	0.00	0.00
21.2	8.16	-0.20	15.07	15.03	58.2	-21.60	2.29	0.00	0.00
21.21	7.89	-0.20	15.04	14.99	58.21	-20.88	2.27	0.00	0.00
21.22	7.62	-0.19	15.00	14.96	58.22	-20.16	2.24	0.00	0.00
21.23	7.34	-0.18	14.97	14.92	58.23	-19.44	2.21	0.00	0.00
21.24	7.07	-0.18	14.93	14.89	58.24	-18.72	2.18	0.00	0.00
21.25	6.80	-0.17	14.90	14.85	58.25	-18.00	2.15	0.00	0.00
21.26	6.53	-0.16	14.86	14.82	58.26	-17.28	2.12	0.00	0.00
21.27	6.26	-0.16	14.82	14.79	58.27	-16.56	2.09	0.00	0.00
21.28	5.98	-0.15	14.79	14.75	58.28	-15.84	2.06	0.00	0.00
21.29	5.71	-0.14	14.75	14.72	58.29	-15.12	2.03	0.00	0.00
21.3	5.44	-0.14	14.72	14.68	58.3	-14.40	2.00	0.00	0.00
21.31	5.17	-0.13	14.68	14.65	58.31	-13.68	1.97	0.00	0.00
21.32	4.90	-0.12	14.64	14.62	58.32	-12.96	1.94	0.00	0.00
21.33	4.62	-0.12	14.61	14.58	58.33	-12.24	1.91	0.00	0.00
21.34	4.35	-0.11	14.57	14.55	58.34	-11.56	1.88	0.00	0.00
21.35	4.08	-0.10	14.54	14.51	58.35	-10.82	1.83	0.00	0.00
21.36	3.81	-0.10	14.50	14.48	58.36	-10.07	1.79	0.00	0.00
21.37	3.54	-0.09	14.47	14.44	58.37	-9.36	1.74	0.00	0.00
21.38	3.26	-0.08	14.43	14.41	58.38	-8.64	1.70	0.00	0.00
21.39	2.99	-0.07	14.39	14.38	58.39	-7.92	1.65	0.00	0.00
21.4	2.72	-0.07	14.36	14.34	58.4	-7.24	1.60	0.00	0.00
21.41	2.45	-0.06	14.32	14.31	58.41	-6.73	1.50	0.00	0.00
21.42	2.18	-0.05	14.29	14.27	58.42	-5.97	1.33	0.00	0.00
21.43	1.90	-0.05	14.25	14.24	58.43	-5.05	1.14	0.00	0.00
21.44	1.63	-0.04	14.21	14.21	58.44	-4.24	0.96	0.00	0.00
21.45	1.36	-0.03	14.18	14.17	58.45	-3.55	0.80	0.00	0.00

21.46	1.09	-0.03	14.14	14.14	58.46	-2.89	0.65	0.00	0.00
21.47	0.82	-0.02	14.11	14.10	58.47	-2.19	0.49	0.00	0.00
21.48	0.54	-0.01	14.07	14.07	58.48	-1.45	0.33	0.00	0.00
21.49	0.27	-0.01	14.04	14.03	58.49	-0.71	0.16	0.00	0.00
21.5	0.00	0.00	14.00	14.00	58.5	0.02	0.00	0.00	0.00
21.51	-0.27	0.01	13.96	13.97	58.51	0.72	-0.16	0.00	0.00
21.52	-0.54	0.01	13.93	13.93	58.52	1.42	-0.32	0.00	0.00
21.53	-0.82	0.02	13.89	13.90	58.53	2.16	-0.49	0.00	0.00
21.54	-1.09	0.03	13.86	13.86	58.54	2.89	-0.65	0.00	0.00
21.55	-1.36	0.03	13.82	13.83	58.55	3.60	-0.81	0.00	0.00
21.56	-1.63	0.04	13.78	13.80	58.56	4.32	-0.98	0.00	0.00
21.57	-1.90	0.05	13.75	13.76	58.57	5.04	-1.14	0.00	0.00
21.58	-2.18	0.05	13.71	13.73	58.58	5.76	-1.30	0.00	0.00
21.59	-2.45	0.06	13.68	13.69	58.59	6.48	-1.47	0.00	0.00
21.6	-2.72	0.07	13.64	13.66	58.6	7.41	-1.59	0.79	0.00
21.61	-2.99	0.07	13.61	13.62	58.61	8.15	-1.66	1.88	0.00
21.62	-3.26	0.08	13.57	13.59	58.62	8.63	-1.69	2.80	0.00
21.63	-3.54	0.09	13.53	13.56	58.63	9.33	-1.74	4.06	0.00
21.64	-3.81	0.10	13.50	13.52	58.64	10.10	-1.79	5.40	0.00
21.65	-4.08	0.10	13.46	13.49	58.65	10.80	-1.83	6.66	0.00
21.66	-4.35	0.11	13.43	13.45	58.66	11.51	-1.88	7.94	0.00
21.67	-4.62	0.12	13.39	13.42	58.67	12.29	-1.91	8.82	0.60
21.68	-4.90	0.12	13.35	13.39	58.68	12.97	-1.94	9.44	1.36
21.69	-5.17	0.13	13.32	13.35	58.69	13.67	-1.97	10.03	2.21
21.7	-5.44	0.14	13.28	13.32	58.7	14.41	-2.00	10.63	3.09
21.71	-5.71	0.14	13.25	13.28	58.71	15.12	-2.03	11.21	3.97
21.72	-5.98	0.15	13.21	13.25	58.72	15.84	-2.06	11.79	4.85
21.73	-6.26	0.16	13.18	13.22	58.73	16.56	-2.09	12.38	5.73
21.74	-6.53	0.16	13.14	13.18	58.74	17.28	-2.12	12.96	6.61
21.75	-6.80	0.17	13.10	13.15	58.75	18.00	-2.15	13.54	7.49
21.76	-7.07	0.18	13.07	13.11	58.76	18.72	-2.18	14.13	8.38
21.77	-7.34	0.18	13.03	13.08	58.77	19.44	-2.21	14.71	9.26
21.78	-7.62	0.19	13.00	13.04	58.78	20.16	-2.23	15.29	10.14
21.79	-7.89	0.20	12.96	13.01	58.79	20.88	-2.26	15.88	11.02
21.8	-8.16	0.20	12.92	12.98	58.8	21.60	-2.29	16.46	11.90
21.81	-8.43	0.21	12.89	12.94	58.81	22.32	-2.32	17.04	12.78
21.82	-8.70	0.22	12.85	12.91	58.82	23.04	-2.35	17.63	13.66
21.83	-8.98	0.22	12.82	12.87	58.83	23.76	-2.38	18.21	14.55
21.84	-9.25	0.23	12.78	12.84	58.84	24.48	-2.41	18.79	15.43
21.85	-9.52	0.24	12.75	12.81	58.85	25.20	-2.44	19.38	16.31
21.86	-9.79	0.24	12.71	12.77	58.86	25.92	-2.47	19.96	17.19
21.87	-10.06	0.25	12.67	12.74	58.87	26.64	-2.50	20.54	18.07
21.88	-10.34	0.26	12.64	12.70	58.88	27.36	-2.53	21.13	18.95
21.89	-10.61	0.27	12.60	12.67	58.89	28.08	-2.56	21.71	19.83
21.9	-10.88	0.27	12.57	12.64	58.9	28.80	-2.59	22.29	20.72
21.91	-11.15	0.28	12.53	12.60	58.91	29.52	-2.61	22.88	21.60
21.92	-11.42	0.29	12.49	12.56	58.92	30.24	-2.64	23.46	22.48
21.93	-11.70	0.29	12.44	12.51	58.93	30.96	-2.67	24.04	23.36
21.94	-11.97	0.30	12.40	12.46	58.94	31.68	-2.70	24.63	24.24
21.95	-12.24	0.31	12.35	12.41	58.95	32.40	-2.73	25.21	25.12
21.96	-12.51	0.32	12.30	12.35	58.96	33.12	-2.76	25.79	26.00
21.97	-12.78	0.33	12.25	12.29	58.97	33.84	-2.79	26.38	26.89
21.98	-13.06	0.34	12.20	12.23	58.98	34.56	-2.82	26.96	27.77
21.99	-13.33	0.35	12.15	12.17	58.99	35.28	-2.85	27.54	28.65
22	-13.60	0.36	12.09	12.11	59	35.91	-2.89	27.97	29.34
22.01	-13.45	0.35	12.13	12.16	59.01	35.74	-2.88	27.71	28.94
22.02	-13.02	0.34	12.20	12.24	59.02	34.46	-2.83	26.80	27.57

22.03	-12.78	0.33	12.25	12.29	59.03	33.77	-2.81	26.26	26.75
22.04	-12.53	0.32	12.30	12.35	59.04	33.19	-2.78	25.73	25.95
22.05	-12.23	0.31	12.35	12.41	59.05	32.38	-2.75	25.11	25.02
22.06	-11.97	0.30	12.40	12.46	59.06	31.67	-2.72	24.53	24.14
22.07	-11.70	0.29	12.44	12.51	59.07	30.97	-2.69	23.96	23.27
22.08	-11.42	0.29	12.49	12.56	59.08	30.24	-2.66	23.37	22.38
22.09	-11.15	0.28	12.53	12.60	59.09	29.52	-2.63	22.79	21.50
22.1	-10.88	0.27	12.57	12.63	59.1	28.80	-2.60	22.20	20.62
22.11	-10.61	0.27	12.60	12.67	59.11	28.08	-2.57	21.62	19.74
22.12	-10.34	0.26	12.64	12.70	59.12	27.36	-2.54	21.04	18.86
22.13	-10.06	0.25	12.67	12.74	59.13	26.64	-2.51	20.45	17.98
22.14	-9.79	0.24	12.71	12.77	59.14	25.92	-2.49	19.87	17.10
22.15	-9.52	0.24	12.75	12.81	59.15	25.20	-2.46	19.29	16.21
22.16	-9.25	0.23	12.78	12.84	59.16	24.48	-2.43	18.70	15.33
22.17	-8.98	0.22	12.82	12.87	59.17	23.76	-2.40	18.12	14.45
22.18	-8.70	0.22	12.85	12.91	59.18	23.04	-2.37	17.54	13.57
22.19	-8.43	0.21	12.89	12.94	59.19	22.32	-2.34	16.95	12.69
22.2	-8.16	0.20	12.92	12.98	59.2	21.60	-2.31	16.37	11.81
22.21	-7.89	0.20	12.96	13.01	59.21	20.88	-2.28	15.79	10.93
22.22	-7.62	0.19	13.00	13.04	59.22	20.16	-2.25	15.20	10.04
22.23	-7.34	0.18	13.03	13.08	59.23	19.44	-2.22	14.62	9.16
22.24	-7.07	0.18	13.07	13.11	59.24	18.72	-2.19	14.03	8.28
22.25	-6.80	0.17	13.10	13.15	59.25	18.00	-2.16	13.45	7.40
22.26	-6.53	0.16	13.14	13.18	59.26	17.28	-2.13	12.87	6.52
22.27	-6.26	0.16	13.18	13.22	59.27	16.56	-2.11	12.28	5.64
22.28	-5.98	0.15	13.21	13.25	59.28	15.84	-2.08	11.70	4.76
22.29	-5.71	0.14	13.25	13.28	59.29	15.12	-2.05	11.12	3.87
22.3	-5.44	0.14	13.28	13.32	59.3	14.40	-2.02	10.53	2.99
22.31	-5.17	0.13	13.32	13.35	59.31	13.68	-1.99	9.95	2.11
22.32	-4.90	0.12	13.35	13.39	59.32	12.96	-1.96	9.37	1.23
22.33	-4.62	0.12	13.39	13.42	59.33	12.24	-1.93	8.78	0.35
22.34	-4.35	0.11	13.43	13.45	59.34	11.57	-1.89	7.78	0.09
22.35	-4.08	0.10	13.46	13.49	59.35	10.81	-1.85	6.49	0.02
22.36	-3.81	0.10	13.50	13.52	59.36	10.07	-1.80	5.19	0.01
22.37	-3.54	0.09	13.53	13.56	59.37	9.36	-1.76	3.92	0.00
22.38	-3.26	0.08	13.57	13.59	59.38	8.64	-1.71	2.64	0.00
22.39	-2.99	0.07	13.61	13.62	59.39	7.92	-1.67	1.36	0.00
22.4	-2.72	0.07	13.64	13.66	59.4	7.27	-1.61	0.34	0.00
22.41	-2.45	0.06	13.68	13.69	59.41	6.73	-1.50	0.09	0.00
22.42	-2.18	0.05	13.71	13.73	59.42	5.95	-1.33	0.02	0.00
22.43	-1.90	0.05	13.75	13.76	59.43	5.04	-1.14	0.01	0.00
22.44	-1.63	0.04	13.78	13.80	59.44	4.24	-0.96	0.00	0.00
22.45	-1.36	0.03	13.82	13.83	59.45	3.55	-0.81	0.00	0.00
22.46	-1.09	0.03	13.86	13.86	59.46	2.89	-0.65	0.00	0.00
22.47	-0.82	0.02	13.89	13.90	59.47	2.19	-0.49	0.00	0.00
22.48	-0.54	0.01	13.93	13.93	59.48	1.45	-0.33	0.00	0.00
22.49	-0.27	0.01	13.96	13.97	59.49	0.71	-0.16	0.00	0.00
22.5	0.00	0.00	14.00	14.00	59.5	-0.01	0.00	0.00	0.00
22.51	0.27	-0.01	14.04	14.03	59.51	-0.72	0.16	0.00	0.00
22.52	0.54	-0.01	14.07	14.07	59.52	-1.42	0.32	0.00	0.00
22.53	0.82	-0.02	14.11	14.10	59.53	-2.16	0.49	0.00	0.00
22.54	1.09	-0.03	14.14	14.14	59.54	-2.89	0.65	0.00	0.00
22.55	1.36	-0.03	14.18	14.17	59.55	-3.60	0.81	0.00	0.00
22.56	1.63	-0.04	14.21	14.21	59.56	-4.32	0.98	0.00	0.00
22.57	1.90	-0.05	14.25	14.24	59.57	-5.04	1.14	0.00	0.00
22.58	2.18	-0.05	14.29	14.27	59.58	-5.76	1.30	0.00	0.00
22.59	2.45	-0.06	14.32	14.31	59.59	-6.48	1.47	0.00	0.00

22.6	2.72	-0.07	14.36	14.34	59.6	-7.40	1.59	0.00	0.00
22.61	2.99	-0.07	14.39	14.38	59.61	-8.15	1.66	0.00	0.00
22.62	3.26	-0.08	14.43	14.41	59.62	-8.63	1.70	0.00	0.00
22.63	3.54	-0.09	14.47	14.44	59.63	-9.33	1.74	0.00	0.00
22.64	3.81	-0.10	14.50	14.48	59.64	-10.11	1.79	0.00	0.00
22.65	4.08	-0.10	14.54	14.51	59.65	-10.80	1.83	0.00	0.00
22.66	4.35	-0.11	14.57	14.55	59.66	-11.51	1.88	0.00	0.00
22.67	4.62	-0.12	14.61	14.58	59.67	-12.29	1.91	0.00	0.00
22.68	4.90	-0.12	14.64	14.62	59.68	-12.97	1.94	0.00	0.00
22.69	5.17	-0.13	14.68	14.65	59.69	-13.67	1.97	0.00	0.00
22.7	5.44	-0.14	14.72	14.68	59.7	-14.41	2.00	0.00	0.00
22.71	5.71	-0.14	14.75	14.72	59.71	-15.12	2.03	0.00	0.00
22.72	5.98	-0.15	14.79	14.75	59.72	-15.84	2.06	0.00	0.00
22.73	6.26	-0.16	14.82	14.79	59.73	-16.56	2.09	0.00	0.00
22.74	6.53	-0.16	14.86	14.82	59.74	-17.28	2.12	0.00	0.00
22.75	6.80	-0.17	14.90	14.85	59.75	-18.00	2.15	0.00	0.00
22.76	7.07	-0.18	14.93	14.89	59.76	-18.72	2.18	0.00	0.00
22.77	7.34	-0.18	14.97	14.92	59.77	-19.44	2.21	0.00	0.00
22.78	7.62	-0.19	15.00	14.96	59.78	-20.16	2.24	0.00	0.00
22.79	7.89	-0.20	15.04	14.99	59.79	-20.88	2.27	0.00	0.00
22.8	8.16	-0.20	15.07	15.03	59.8	-21.60	2.29	0.00	0.00
22.81	8.43	-0.21	15.11	15.06	59.81	-22.32	2.32	0.00	0.00
22.82	8.70	-0.22	15.15	15.09	59.82	-23.04	2.35	0.00	0.00
22.83	8.98	-0.22	15.18	15.13	59.83	-23.76	2.38	0.00	0.00
22.84	9.25	-0.23	15.22	15.16	59.84	-24.48	2.41	0.00	0.00
22.85	9.52	-0.24	15.25	15.20	59.85	-25.20	2.44	0.00	0.00
22.86	9.79	-0.24	15.29	15.23	59.86	-25.92	2.47	0.00	0.00
22.87	10.06	-0.25	15.33	15.26	59.87	-26.64	2.50	0.00	0.00
22.88	10.34	-0.26	15.36	15.30	59.88	-27.36	2.53	0.00	0.00
22.89	10.61	-0.27	15.40	15.33	59.89	-28.08	2.56	0.00	0.00
22.9	10.88	-0.27	15.43	15.37	59.9	-28.80	2.59	0.00	0.00
22.91	11.15	-0.28	15.47	15.41	59.91	-29.52	2.62	0.00	0.00
22.92	11.42	-0.29	15.55	15.51	59.92	-30.24	2.65	0.00	0.00
22.93	11.70	-0.29	15.64	15.64	59.93	-30.96	2.67	0.00	0.00
22.94	11.97	-0.30	15.75	15.80	59.94	-31.68	2.70	0.00	0.00
22.95	12.24	-0.31	15.88	15.98	59.95	-32.40	2.73	0.00	0.00
22.96	12.51	-0.32	16.02	16.19	59.96	-33.12	2.76	0.00	0.00
22.97	12.78	-0.33	16.17	16.41	59.97	-33.84	2.79	0.00	0.00
22.98	13.06	-0.34	16.33	16.65	59.98	-34.56	2.82	0.00	0.00
22.99	13.33	-0.35	16.50	16.90	59.99	-35.28	2.85	0.00	0.00
23	13.60	-0.36	16.67	17.15	60	-35.92	2.89	0.00	0.00
23.01	13.45	-0.35	16.54	16.97	60.01	-35.70	2.88	0.00	0.00
23.02	13.02	-0.34	16.31	16.62	60.02	-34.38	2.83	0.00	0.00
23.03	12.78	-0.33	16.17	16.40	60.03	-33.65	2.80	0.00	0.00
23.04	12.53	-0.32	16.02	16.19	60.04	-33.03	2.77	0.00	0.00
23.05	12.23	-0.31	15.88	15.98	60.05	-32.18	2.74	0.00	0.00
23.06	11.97	-0.30	15.75	15.79	60.06	-31.43	2.71	0.00	0.00
23.07	11.70	-0.29	15.64	15.64	60.07	-30.69	2.68	0.00	0.00
23.08	11.42	-0.29	15.54	15.50	60.08	-29.92	2.65	0.00	0.00
23.09	11.15	-0.28	15.48	15.42	60.09	-29.16	2.62	0.00	0.00
23.1	10.88	-0.27	15.44	15.37	60.1	-28.40	2.59	0.00	0.00
23.11	10.61	-0.27	15.40	15.33	60.11	-27.64	2.56	0.00	0.00
23.12	10.34	-0.26	15.36	15.30	60.12	-26.88	2.53	0.00	0.00
23.13	10.06	-0.25	15.33	15.26	60.13	-26.12	2.49	0.00	0.00
23.14	9.79	-0.24	15.29	15.23	60.14	-25.36	2.46	0.00	0.00
23.15	9.52	-0.24	15.25	15.20	60.15	-24.60	2.43	0.00	0.00
23.16	9.25	-0.23	15.22	15.16	60.16	-23.84	2.40	0.00	0.00

23.17	8.98	-0.22	15.18	15.13	60.17	-23.08	2.37	0.00	0.00
23.18	8.70	-0.22	15.15	15.09	60.18	-22.32	2.34	0.00	0.00
23.19	8.43	-0.21	15.11	15.06	60.19	-21.56	2.31	0.00	0.00
23.2	8.16	-0.20	15.07	15.03	60.2	-20.80	2.28	0.00	0.00
23.21	7.89	-0.20	15.04	14.99	60.21	-20.04	2.25	0.00	0.00
23.22	7.62	-0.19	15.00	14.96	60.22	-19.28	2.22	0.00	0.00
23.23	7.34	-0.18	14.97	14.92	60.23	-18.52	2.19	0.00	0.00
23.24	7.07	-0.18	14.93	14.89	60.24	-17.76	2.15	0.00	0.00
23.25	6.80	-0.17	14.90	14.85	60.25	-17.00	2.12	0.00	0.00
23.26	6.53	-0.16	14.86	14.82	60.26	-16.24	2.09	0.00	0.00
23.27	6.26	-0.16	14.82	14.79	60.27	-15.48	2.06	0.00	0.00
23.28	5.98	-0.15	14.79	14.75	60.28	-14.72	2.03	0.00	0.00
23.29	5.71	-0.14	14.75	14.72	60.29	-13.96	2.00	0.00	0.00
23.3	5.44	-0.14	14.72	14.68	60.3	-13.20	1.97	0.00	0.00
23.31	5.17	-0.13	14.68	14.65	60.31	-12.44	1.94	0.00	0.00
23.32	4.90	-0.12	14.64	14.62	60.32	-11.72	1.90	0.00	0.00
23.33	4.62	-0.12	14.61	14.58	60.33	-10.95	1.85	0.00	0.00
23.34	4.35	-0.11	14.57	14.55	60.34	-10.15	1.81	0.00	0.00
23.35	4.08	-0.10	14.54	14.51	60.35	-9.40	1.76	0.00	0.00
23.36	3.81	-0.10	14.50	14.48	60.36	-8.64	1.71	0.00	0.00
23.37	3.54	-0.09	14.47	14.44	60.37	-7.88	1.66	0.00	0.00
23.38	3.26	-0.08	14.43	14.41	60.38	-7.22	1.60	0.00	0.00
23.39	2.99	-0.07	14.39	14.38	60.39	-6.62	1.48	0.00	0.00
23.4	2.72	-0.07	14.36	14.34	60.4	-5.77	1.29	0.00	0.00
23.41	2.45	-0.06	14.32	14.31	60.41	-4.83	1.09	0.00	0.00
23.42	2.18	-0.05	14.29	14.27	60.42	-4.00	0.91	0.00	0.00
23.43	1.90	-0.05	14.25	14.24	60.43	-3.28	0.74	0.00	0.00
23.44	1.63	-0.04	14.21	14.21	60.44	-2.58	0.58	0.00	0.00
23.45	1.36	-0.03	14.18	14.17	60.45	-1.83	0.41	0.00	0.00
23.46	1.09	-0.03	14.14	14.14	60.46	-1.05	0.24	0.00	0.00
23.47	0.82	-0.02	14.11	14.10	60.47	-0.27	0.06	0.00	0.00
23.48	0.54	-0.01	14.07	14.07	60.48	0.50	-0.11	0.00	0.00
23.49	0.27	-0.01	14.04	14.03	60.49	1.22	-0.28	0.00	0.00
23.5	0.00	0.00	14.00	14.00	60.5	1.99	-0.45	0.00	0.00
23.51	-0.27	0.01	13.96	13.97	60.51	2.76	-0.62	0.00	0.00
23.52	-0.54	0.01	13.93	13.93	60.52	3.53	-0.80	0.00	0.00
23.53	-0.82	0.02	13.89	13.90	60.53	4.28	-0.97	0.00	0.00
23.54	-1.09	0.03	13.86	13.86	60.54	5.04	-1.14	0.00	0.00
23.55	-1.36	0.03	13.82	13.83	60.55	5.80	-1.31	0.00	0.00
23.56	-1.63	0.04	13.78	13.80	60.56	6.56	-1.48	0.00	0.00
23.57	-1.90	0.05	13.75	13.76	60.57	7.55	-1.62	0.87	0.00
23.58	-2.18	0.05	13.71	13.73	60.58	8.32	-1.68	2.00	0.00
23.59	-2.45	0.06	13.68	13.69	60.59	8.82	-1.72	2.99	0.00
23.6	-2.72	0.07	13.64	13.66	60.6	9.57	-1.77	4.33	0.00
23.61	-2.99	0.07	13.61	13.62	60.61	10.39	-1.82	5.73	0.00
23.62	-3.26	0.08	13.57	13.59	60.62	11.12	-1.87	7.07	0.00
23.63	-3.54	0.09	13.53	13.56	60.63	11.89	-1.91	8.29	0.17
23.64	-3.81	0.10	13.50	13.52	60.64	12.69	-1.95	9.09	0.95
23.65	-4.08	0.10	13.46	13.49	60.65	13.40	-1.98	9.71	1.78
23.66	-4.35	0.11	13.43	13.45	60.66	14.15	-2.01	10.33	2.70
23.67	-4.62	0.12	13.39	13.42	60.67	14.93	-2.04	10.96	3.63
23.68	-4.90	0.12	13.35	13.39	60.68	15.68	-2.07	11.57	4.56
23.69	-5.17	0.13	13.32	13.35	60.69	16.44	-2.10	12.19	5.49
23.7	-5.44	0.14	13.28	13.32	60.7	17.20	-2.13	12.80	6.42
23.71	-5.71	0.14	13.25	13.28	60.71	17.96	-2.16	13.42	7.35
23.72	-5.98	0.15	13.21	13.25	60.72	18.72	-2.19	14.03	8.28
23.73	-6.26	0.16	13.18	13.22	60.73	19.48	-2.22	14.65	9.21

23.74	-6.53	0.16	13.14	13.18	60.74	20.24	-2.25	15.27	10.14
23.75	-6.80	0.17	13.10	13.15	60.75	21.00	-2.29	15.88	11.07
23.76	-7.07	0.18	13.07	13.11	60.76	21.76	-2.32	16.50	12.00
23.77	-7.34	0.18	13.03	13.08	60.77	22.52	-2.35	17.11	12.93
23.78	-7.62	0.19	13.00	13.04	60.78	23.28	-2.38	17.73	13.86
23.79	-7.89	0.20	12.96	13.01	60.79	24.04	-2.41	18.35	14.79
23.8	-8.16	0.20	12.92	12.98	60.8	24.80	-2.44	18.96	15.72
23.81	-8.43	0.21	12.89	12.94	60.81	25.56	-2.47	19.58	16.65
23.82	-8.70	0.22	12.85	12.91	60.82	26.32	-2.50	20.19	17.59
23.83	-8.98	0.22	12.82	12.87	60.83	27.08	-2.53	20.81	18.52
23.84	-9.25	0.23	12.78	12.84	60.84	27.84	-2.56	21.42	19.45
23.85	-9.52	0.24	12.75	12.81	60.85	28.60	-2.59	22.04	20.38
23.86	-9.79	0.24	12.71	12.77	60.86	29.36	-2.63	22.66	21.31
23.87	-10.06	0.25	12.67	12.74	60.87	30.12	-2.66	23.27	22.24
23.88	-10.34	0.26	12.64	12.70	60.88	30.88	-2.69	23.89	23.17
23.89	-10.61	0.27	12.60	12.67	60.89	31.64	-2.72	24.50	24.10
23.9	-10.88	0.27	12.57	12.64	60.9	32.40	-2.75	25.12	25.03
23.91	-11.15	0.28	12.53	12.60	60.91	33.16	-2.78	25.74	25.96
23.92	-11.42	0.29	12.49	12.56	60.92	33.92	-2.81	26.35	26.89
23.93	-11.70	0.29	12.44	12.51	60.93	34.68	-2.84	26.97	27.82
23.94	-11.97	0.30	12.40	12.46	60.94	35.44	-2.87	27.58	28.75
23.95	-12.24	0.31	12.35	12.41	60.95	36.08	-2.92	27.99	29.43
23.96	-12.51	0.32	12.30	12.35	60.96	36.72	-3.03	28.10	29.82
23.97	-12.78	0.33	12.25	12.29	60.97	37.61	-3.18	28.15	30.22
23.98	-13.06	0.34	12.20	12.23	60.98	38.52	-3.34	28.18	30.61
23.99	-13.33	0.35	12.15	12.17	60.99	39.31	-3.48	28.28	30.93
24	-13.60	0.36	12.09	12.11	61	40.03	-3.61	28.48	31.17
24.01	-13.41	0.35	12.14	12.17	61.01	40.01	-3.60	28.28	30.89
24.02	-12.92	0.34	12.22	12.26	61.02	38.21	-3.53	27.02	28.98
24.03	-12.64	0.33	12.28	12.32	61.03	37.48	-3.51	26.48	28.16
24.04	-12.35	0.32	12.33	12.39	61.04	36.94	-3.48	25.91	27.31
24.05	-12.00	0.30	12.39	12.45	61.05	35.95	-3.44	25.20	26.23
24.06	-11.69	0.29	12.44	12.51	61.06	35.19	-3.41	24.56	25.26
24.07	-11.38	0.28	12.50	12.57	61.07	34.41	-3.38	23.93	24.31
24.08	-11.05	0.28	12.54	12.61	61.08	33.60	-3.34	23.27	23.31
24.09	-10.74	0.27	12.58	12.65	61.09	32.80	-3.31	22.62	22.33
24.1	-10.42	0.26	12.63	12.69	61.1	32.00	-3.28	21.97	21.36
24.11	-10.10	0.25	12.67	12.73	61.11	31.20	-3.25	21.32	20.38
24.12	-9.78	0.24	12.71	12.77	61.12	30.40	-3.21	20.68	19.40
24.13	-9.47	0.24	12.75	12.81	61.13	29.60	-3.18	20.03	18.42
24.14	-9.15	0.23	12.79	12.85	61.14	28.80	-3.15	19.38	17.44
24.15	-8.83	0.22	12.84	12.89	61.15	28.00	-3.12	18.73	16.46
24.16	-8.51	0.21	12.88	12.93	61.16	27.20	-3.09	18.08	15.48
24.17	-8.19	0.20	12.92	12.97	61.17	26.40	-3.05	17.44	14.50
24.18	-7.88	0.20	12.96	13.01	61.18	25.60	-3.02	16.79	13.52
24.19	-7.56	0.19	13.00	13.05	61.19	24.80	-2.99	16.14	12.54
24.2	-7.24	0.18	13.05	13.09	61.2	24.00	-2.96	15.49	11.56
24.21	-6.92	0.17	13.09	13.13	61.21	23.20	-2.92	14.84	10.58
24.22	-6.60	0.17	13.13	13.17	61.22	22.40	-2.89	14.19	9.60
24.23	-6.29	0.16	13.17	13.21	61.23	21.60	-2.86	13.55	8.63
24.24	-5.97	0.15	13.21	13.25	61.24	20.80	-2.83	12.90	7.65
24.25	-5.65	0.14	13.25	13.29	61.25	20.00	-2.79	12.25	6.67
24.26	-5.33	0.13	13.30	13.33	61.26	19.20	-2.76	11.60	5.69
24.27	-5.01	0.13	13.34	13.37	61.27	18.40	-2.73	10.95	4.71
24.28	-4.70	0.12	13.38	13.41	61.28	17.60	-2.70	10.30	3.73
24.29	-4.38	0.11	13.42	13.45	61.29	16.80	-2.66	9.66	2.75
24.3	-4.06	0.10	13.46	13.49	61.3	16.00	-2.63	9.01	1.77

24.31	-3.74	0.09	13.51	13.53	61.31	15.20	-2.60	8.36	0.79
24.32	-3.42	0.09	13.55	13.57	61.32	14.43	-2.56	7.45	0.20
24.33	-3.11	0.08	13.59	13.61	61.33	13.64	-2.51	6.14	0.05
24.34	-2.79	0.07	13.63	13.65	61.34	12.80	-2.46	4.70	0.01
24.35	-2.47	0.06	13.67	13.69	61.35	12.00	-2.41	3.28	0.00
24.36	-2.15	0.05	13.72	13.73	61.36	11.21	-2.36	1.87	0.00
24.37	-1.83	0.05	13.76	13.77	61.37	10.41	-2.31	0.47	0.00
24.38	-1.52	0.04	13.80	13.81	61.38	9.88	-2.21	0.12	0.00
24.39	-1.20	0.03	13.84	13.85	61.39	9.07	-2.03	0.03	0.00
24.4	-0.88	0.02	13.88	13.89	61.4	8.03	-1.81	0.01	0.00
24.41	-0.56	0.01	13.93	13.93	61.41	7.11	-1.61	0.00	0.00
24.42	-0.24	0.01	13.97	13.97	61.42	6.33	-1.44	0.00	0.00
24.43	0.07	0.00	14.01	14.01	61.43	5.61	-1.27	0.00	0.00
24.44	0.39	-0.01	14.05	14.05	61.44	4.84	-1.09	0.00	0.00
24.45	0.71	-0.02	14.09	14.09	61.45	4.02	-0.91	0.00	0.00
24.46	1.03	-0.03	14.13	14.13	61.46	3.19	-0.72	0.00	0.00
24.47	1.35	-0.03	14.18	14.17	61.47	2.39	-0.54	0.00	0.00
24.48	1.66	-0.04	14.22	14.21	61.48	1.60	-0.36	0.00	0.00
24.49	1.98	-0.05	14.26	14.25	61.49	0.80	-0.18	0.00	0.00
24.5	2.30	-0.06	14.30	14.29	61.5	0.00	0.00	0.00	0.00
24.51	2.62	-0.07	14.34	14.33	61.51	-0.80	0.18	0.00	0.00
24.52	2.94	-0.07	14.39	14.37	61.52	-1.59	0.36	0.00	0.00
24.53	3.25	-0.08	14.43	14.41	61.53	-2.41	0.54	0.00	0.00
24.54	3.57	-0.09	14.47	14.45	61.54	-3.21	0.72	0.00	0.00
24.55	3.89	-0.10	14.51	14.49	61.55	-4.00	0.90	0.00	0.00
24.56	4.21	-0.11	14.55	14.53	61.56	-4.80	1.08	0.00	0.00
24.57	4.53	-0.11	14.60	14.57	61.57	-5.60	1.27	0.00	0.00
24.58	4.84	-0.12	14.64	14.61	61.58	-6.40	1.45	0.00	0.00
24.59	5.16	-0.13	14.68	14.65	61.59	-7.37	1.60	0.00	0.00
24.6	5.48	-0.14	14.72	14.69	61.6	-8.30	1.68	0.00	0.00
24.61	5.80	-0.14	14.76	14.73	61.61	-8.82	1.72	0.00	0.00
24.62	6.12	-0.15	14.80	14.77	61.62	-9.54	1.77	0.00	0.00
24.63	6.43	-0.16	14.85	14.81	61.63	-10.43	1.82	0.00	0.00
24.64	6.75	-0.17	14.89	14.85	61.64	-11.21	1.87	0.00	0.00
24.65	7.07	-0.18	14.93	14.89	61.65	-12.02	1.92	0.00	0.00
24.66	7.39	-0.18	14.97	14.93	61.66	-12.84	1.95	0.00	0.00
24.67	7.71	-0.19	15.01	14.97	61.67	-13.60	1.99	0.00	0.00
24.68	8.02	-0.20	15.06	15.01	61.68	-14.40	2.02	0.00	0.00
24.69	8.34	-0.21	15.10	15.05	61.69	-15.21	2.05	0.00	0.00
24.7	8.66	-0.22	15.14	15.09	61.7	-16.00	2.08	0.00	0.00
24.71	8.98	-0.22	15.18	15.13	61.71	-16.80	2.12	0.00	0.00
24.72	9.30	-0.23	15.22	15.17	61.72	-17.60	2.15	0.00	0.00
24.73	9.61	-0.24	15.27	15.21	61.73	-18.40	2.18	0.00	0.00
24.74	9.93	-0.25	15.31	15.25	61.74	-19.20	2.21	0.00	0.00
24.75	10.25	-0.26	15.35	15.29	61.75	-20.00	2.25	0.00	0.00
24.76	10.57	-0.26	15.39	15.33	61.76	-20.80	2.28	0.00	0.00
24.77	10.89	-0.27	15.43	15.37	61.77	-21.60	2.31	0.00	0.00
24.78	11.20	-0.28	15.49	15.43	61.78	-22.40	2.34	0.00	0.00
24.79	11.52	-0.29	15.58	15.55	61.79	-23.20	2.38	0.00	0.00
24.8	11.84	-0.30	15.70	15.72	61.8	-24.00	2.41	0.00	0.00
24.81	12.16	-0.31	15.84	15.92	61.81	-24.80	2.44	0.00	0.00
24.82	12.47	-0.32	16.00	16.16	61.82	-25.60	2.47	0.00	0.00
24.83	12.79	-0.33	16.18	16.42	61.83	-26.40	2.51	0.00	0.00
24.84	13.11	-0.34	16.37	16.70	61.84	-27.20	2.54	0.00	0.00
24.85	13.43	-0.35	16.56	16.99	61.85	-28.00	2.57	0.00	0.00
24.86	13.75	-0.37	16.77	17.30	61.86	-28.80	2.60	0.00	0.00
24.87	14.07	-0.38	16.98	17.62	61.87	-29.60	2.64	0.00	0.00

24.88	14.38	-0.39	17.20	17.95	61.88	-30.40	2.67	0.00	0.00
24.89	14.70	-0.40	17.42	18.27	61.89	-31.20	2.70	0.00	0.00
24.9	15.02	-0.41	17.64	18.61	61.9	-32.00	2.73	0.00	0.00
24.91	15.34	-0.43	17.87	18.96	61.91	-32.80	2.77	0.00	0.00
24.92	15.66	-0.44	18.11	19.32	61.92	-33.60	2.80	0.00	0.00
24.93	15.97	-0.45	18.34	19.67	61.93	-34.40	2.83	0.00	0.00
24.94	16.29	-0.46	18.58	20.03	61.94	-35.20	2.86	0.00	0.00
24.95	16.61	-0.48	18.82	20.38	61.95	-35.95	2.91	0.00	0.00
24.96	16.93	-0.49	19.05	20.74	61.96	-36.54	3.00	0.00	0.00
24.97	17.25	-0.50	19.29	21.10	61.97	-37.42	3.15	0.00	0.00
24.98	17.56	-0.51	19.53	21.46	61.98	-38.43	3.33	0.00	0.00
24.99	17.88	-0.53	19.78	21.83	61.99	-39.29	3.48	0.00	0.00
25	18.20	-0.54	20.02	22.20	62	-40.05	3.61	0.00	0.00
25.01	18.00	-0.53	19.82	21.90	62.01	-40.04	3.60	0.00	0.00
25.02	17.43	-0.51	19.44	21.32	62.02	-38.20	3.53	0.00	0.00
25.03	17.09	-0.50	19.18	20.93	62.03	-37.47	3.51	0.00	0.00
25.04	16.77	-0.48	18.92	20.55	62.04	-36.94	3.48	0.00	0.00
25.05	16.37	-0.47	18.64	20.12	62.05	-35.95	3.44	0.00	0.00
25.06	16.01	-0.45	18.37	19.72	62.06	-35.19	3.41	0.00	0.00
25.07	15.66	-0.44	18.11	19.32	62.07	-34.41	3.38	0.00	0.00
25.08	15.29	-0.42	17.84	18.91	62.08	-33.60	3.35	0.00	0.00
25.09	14.92	-0.41	17.57	18.51	62.09	-32.80	3.31	0.00	0.00
25.1	14.56	-0.40	17.32	18.13	62.1	-32.00	3.28	0.00	0.00
25.11	14.20	-0.38	17.07	17.75	62.11	-31.20	3.25	0.00	0.00
25.12	13.83	-0.37	16.82	17.38	62.12	-30.40	3.22	0.00	0.00
25.13	13.47	-0.36	16.59	17.03	62.13	-29.60	3.18	0.00	0.00
25.14	13.10	-0.34	16.36	16.69	62.14	-28.80	3.15	0.00	0.00
25.15	12.74	-0.33	16.15	16.37	62.15	-28.00	3.12	0.00	0.00
25.16	12.38	-0.32	15.95	16.08	62.16	-27.20	3.09	0.00	0.00
25.17	12.01	-0.30	15.77	15.82	62.17	-26.40	3.05	0.00	0.00
25.18	11.65	-0.29	15.63	15.62	62.18	-25.60	3.02	0.00	0.00
25.19	11.28	-0.28	15.51	15.46	62.19	-24.80	2.99	0.00	0.00
25.2	10.92	-0.27	15.44	15.38	62.2	-24.00	2.96	0.00	0.00
25.21	10.56	-0.26	15.39	15.33	62.21	-23.20	2.92	0.00	0.00
25.22	10.19	-0.25	15.34	15.28	62.22	-22.40	2.89	0.00	0.00
25.23	9.83	-0.25	15.29	15.24	62.23	-21.60	2.86	0.00	0.00
25.24	9.46	-0.24	15.25	15.19	62.24	-20.80	2.83	0.00	0.00
25.25	9.10	-0.23	15.20	15.14	62.25	-20.00	2.79	0.00	0.00
25.26	8.74	-0.22	15.15	15.10	62.26	-19.20	2.76	0.00	0.00
25.27	8.37	-0.21	15.10	15.05	62.27	-18.40	2.73	0.00	0.00
25.28	8.01	-0.20	15.05	15.01	62.28	-17.60	2.70	0.00	0.00
25.29	7.64	-0.19	15.01	14.96	62.29	-16.80	2.66	0.00	0.00
25.3	7.28	-0.18	14.96	14.92	62.3	-16.00	2.63	0.00	0.00
25.31	6.92	-0.17	14.91	14.87	62.31	-15.20	2.60	0.00	0.00
25.32	6.55	-0.16	14.86	14.82	62.32	-14.43	2.56	0.00	0.00
25.33	6.19	-0.15	14.81	14.78	62.33	-13.63	2.51	0.00	0.00
25.34	5.82	-0.15	14.77	14.73	62.34	-12.80	2.46	0.00	0.00
25.35	5.46	-0.14	14.72	14.69	62.35	-12.00	2.41	0.00	0.00
25.36	5.10	-0.13	14.67	14.64	62.36	-11.21	2.36	0.00	0.00
25.37	4.73	-0.12	14.62	14.59	62.37	-10.41	2.31	0.00	0.00
25.38	4.37	-0.11	14.57	14.55	62.38	-9.88	2.21	0.00	0.00
25.39	4.00	-0.10	14.53	14.50	62.39	-9.07	2.03	0.00	0.00
25.4	3.64	-0.09	14.48	14.46	62.4	-8.03	1.81	0.00	0.00
25.41	3.28	-0.08	14.43	14.41	62.41	-7.11	1.61	0.00	0.00
25.42	2.91	-0.07	14.38	14.37	62.42	-6.33	1.44	0.00	0.00
25.43	2.55	-0.06	14.33	14.32	62.43	-5.61	1.27	0.00	0.00
25.44	2.18	-0.05	14.29	14.27	62.44	-4.84	1.09	0.00	0.00

25.45	1.82	-0.05	14.24	14.23	62.45	-4.02	0.91	0.00	0.00
25.46	1.46	-0.04	14.19	14.18	62.46	-3.19	0.72	0.00	0.00
25.47	1.09	-0.03	14.14	14.14	62.47	-2.39	0.54	0.00	0.00
25.48	0.73	-0.02	14.10	14.09	62.48	-1.60	0.36	0.00	0.00
25.49	0.36	-0.01	14.05	14.05	62.49	-0.80	0.18	0.00	0.00
25.5	0.00	0.00	14.00	14.00	62.5	0.00	0.00	0.00	0.00
25.51	-0.36	0.01	13.95	13.95	62.51	0.80	-0.18	0.00	0.00
25.52	-0.73	0.02	13.90	13.91	62.52	1.59	-0.36	0.00	0.00
25.53	-1.09	0.03	13.86	13.86	62.53	2.41	-0.54	0.00	0.00
25.54	-1.46	0.04	13.81	13.82	62.54	3.21	-0.72	0.00	0.00
25.55	-1.82	0.05	13.76	13.77	62.55	4.00	-0.90	0.00	0.00
25.56	-2.18	0.05	13.71	13.73	62.56	4.80	-1.08	0.00	0.00
25.57	-2.55	0.06	13.66	13.68	62.57	5.60	-1.27	0.00	0.00
25.58	-2.91	0.07	13.62	13.63	62.58	6.40	-1.45	0.00	0.00
25.59	-3.28	0.08	13.57	13.59	62.59	7.20	-1.63	0.00	0.00
25.6	-3.64	0.09	13.52	13.54	62.6	8.00	-1.81	0.00	0.00
25.61	-4.00	0.10	13.47	13.50	62.61	8.80	-1.99	0.00	0.00
25.62	-4.37	0.11	13.42	13.45	62.62	9.60	-2.17	0.00	0.00
25.63	-4.73	0.12	13.38	13.41	62.63	10.68	-2.30	1.07	0.00
25.64	-5.10	0.13	13.33	13.36	62.64	11.42	-2.37	2.18	0.00
25.65	-5.46	0.14	13.28	13.32	62.65	11.96	-2.41	3.26	0.00
25.66	-5.82	0.15	13.23	13.27	62.66	12.78	-2.46	4.70	0.00
25.67	-6.19	0.15	13.18	13.22	62.67	13.63	-2.51	6.17	0.00
25.68	-6.55	0.16	13.14	13.18	62.68	14.41	-2.56	7.49	0.11
25.69	-6.92	0.17	13.09	13.13	62.69	15.25	-2.60	8.33	0.91
25.7	-7.28	0.18	13.04	13.09	62.7	16.00	-2.63	8.99	1.79
25.71	-7.64	0.19	12.99	13.04	62.71	16.79	-2.66	9.65	2.75
25.72	-8.01	0.20	12.94	13.00	62.72	17.61	-2.70	10.31	3.73
25.73	-8.37	0.21	12.90	12.95	62.73	18.40	-2.73	10.95	4.71
25.74	-8.74	0.22	12.85	12.90	62.74	19.20	-2.76	11.60	5.69
25.75	-9.10	0.23	12.80	12.86	62.75	20.00	-2.79	12.25	6.67
25.76	-9.46	0.24	12.75	12.81	62.76	20.80	-2.83	12.90	7.65
25.77	-9.83	0.25	12.70	12.77	62.77	21.60	-2.86	13.55	8.63
25.78	-10.19	0.25	12.66	12.72	62.78	22.40	-2.89	14.19	9.60
25.79	-10.56	0.26	12.61	12.68	62.79	23.20	-2.92	14.84	10.58
25.8	-10.92	0.27	12.56	12.63	62.8	24.00	-2.96	15.49	11.56
25.81	-11.28	0.28	12.51	12.58	62.81	24.80	-2.99	16.14	12.54
25.82	-11.64	0.29	12.45	12.52	62.82	25.60	-3.02	16.79	13.52
25.83	-12.01	0.30	12.39	12.45	62.83	26.40	-3.05	17.44	14.50
25.84	-12.37	0.32	12.32	12.38	62.84	27.20	-3.09	18.08	15.48
25.85	-12.74	0.33	12.26	12.30	62.85	28.00	-3.12	18.73	16.46
25.86	-13.10	0.34	12.19	12.22	62.86	28.80	-3.15	19.38	17.44
25.87	-13.47	0.36	12.12	12.14	62.87	29.60	-3.18	20.03	18.42
25.88	-13.83	0.37	12.05	12.06	62.88	30.40	-3.21	20.68	19.40
25.89	-14.20	0.38	11.98	11.98	62.89	31.20	-3.25	21.32	20.38
25.9	-14.56	0.40	11.91	11.90	62.9	32.00	-3.28	21.97	21.36
25.91	-14.92	0.41	11.84	11.81	62.91	32.80	-3.31	22.62	22.34
25.92	-15.29	0.42	11.77	11.73	62.92	33.60	-3.34	23.27	23.32
25.93	-15.65	0.44	11.70	11.64	62.93	34.40	-3.38	23.92	24.29
25.94	-16.02	0.45	11.63	11.56	62.94	35.20	-3.41	24.57	25.27
25.95	-16.38	0.47	11.56	11.48	62.95	36.00	-3.44	25.21	26.25
25.96	-16.74	0.48	11.48	11.39	62.96	36.80	-3.47	25.86	27.23
25.97	-17.11	0.50	11.41	11.31	62.97	37.60	-3.51	26.51	28.21
25.98	-17.47	0.51	11.35	11.23	62.98	38.40	-3.54	27.16	29.19
25.99	-17.84	0.52	11.28	11.14	62.99	39.20	-3.57	27.81	30.17
26	-18.20	0.54	11.21	11.06	63	39.92	-3.62	28.34	30.96
26.01	-18.01	0.53	11.26	11.12	63.01	39.68	-3.60	28.01	30.47

26.02	-17.42	0.51	11.35	11.23	63.02	38.29	-3.55	27.03	28.98
26.03	-17.09	0.50	11.42	11.31	63.03	37.53	-3.52	26.43	28.07
26.04	-16.77	0.48	11.48	11.39	63.04	36.88	-3.49	25.84	27.18
26.05	-16.37	0.47	11.56	11.48	63.05	35.98	-3.46	25.15	26.14
26.06	-16.01	0.45	11.63	11.56	63.06	35.19	-3.42	24.50	25.16
26.07	-15.66	0.44	11.70	11.64	63.07	34.41	-3.39	23.86	24.20
26.08	-15.29	0.42	11.77	11.73	63.08	33.60	-3.36	23.21	23.21
26.09	-14.92	0.41	11.84	11.81	63.09	32.80	-3.33	22.56	22.23
26.1	-14.56	0.40	11.91	11.90	63.1	32.00	-3.29	21.92	21.25
26.11	-14.20	0.38	11.98	11.98	63.11	31.20	-3.26	21.27	20.27
26.12	-13.83	0.37	12.05	12.06	63.12	30.40	-3.23	20.62	19.29
26.13	-13.47	0.36	12.12	12.14	63.13	29.60	-3.20	19.97	18.32
26.14	-13.10	0.34	12.19	12.22	63.14	28.80	-3.16	19.32	17.34
26.15	-12.74	0.33	12.26	12.30	63.15	28.00	-3.13	18.67	16.36
26.16	-12.38	0.32	12.32	12.38	63.16	27.20	-3.10	18.03	15.38
26.17	-12.01	0.30	12.39	12.45	63.17	26.40	-3.07	17.38	14.40
26.18	-11.65	0.29	12.45	12.52	63.18	25.60	-3.03	16.73	13.42
26.19	-11.28	0.28	12.51	12.58	63.19	24.80	-3.00	16.08	12.44
26.2	-10.92	0.27	12.56	12.63	63.2	24.00	-2.97	15.43	11.46
26.21	-10.56	0.26	12.61	12.68	63.21	23.20	-2.94	14.79	10.48
26.22	-10.19	0.25	12.66	12.72	63.22	22.40	-2.90	14.14	9.50
26.23	-9.83	0.25	12.70	12.77	63.23	21.60	-2.87	13.49	8.52
26.24	-9.46	0.24	12.75	12.81	63.24	20.80	-2.84	12.84	7.54
26.25	-9.10	0.23	12.80	12.86	63.25	20.00	-2.81	12.19	6.56
26.26	-8.74	0.22	12.85	12.90	63.26	19.20	-2.77	11.54	5.58
26.27	-8.37	0.21	12.90	12.95	63.27	18.40	-2.74	10.90	4.60
26.28	-8.01	0.20	12.94	13.00	63.28	17.60	-2.71	10.25	3.63
26.29	-7.64	0.19	12.99	13.04	63.29	16.80	-2.68	9.60	2.65
26.3	-7.28	0.18	13.04	13.09	63.3	16.00	-2.64	8.95	1.67
26.31	-6.92	0.17	13.09	13.13	63.31	15.20	-2.61	8.30	0.69
26.32	-6.55	0.16	13.14	13.18	63.32	14.44	-2.57	7.34	0.17
26.33	-6.19	0.15	13.18	13.22	63.33	13.63	-2.53	6.00	0.04
26.34	-5.82	0.15	13.23	13.27	63.34	12.80	-2.47	4.56	0.01
26.35	-5.46	0.14	13.28	13.32	63.35	12.00	-2.42	3.14	0.00
26.36	-5.10	0.13	13.33	13.36	63.36	11.20	-2.37	1.73	0.00
26.37	-4.73	0.12	13.38	13.41	63.37	10.43	-2.32	0.43	0.00
26.38	-4.37	0.11	13.42	13.45	63.38	9.88	-2.21	0.11	0.00
26.39	-4.00	0.10	13.47	13.50	63.39	9.05	-2.03	0.03	0.00
26.4	-3.64	0.09	13.52	13.54	63.4	8.02	-1.81	0.01	0.00
26.41	-3.28	0.08	13.57	13.59	63.41	7.11	-1.61	0.00	0.00
26.42	-2.91	0.07	13.62	13.63	63.42	6.34	-1.44	0.00	0.00
26.43	-2.55	0.06	13.66	13.68	63.43	5.61	-1.27	0.00	0.00
26.44	-2.18	0.05	13.71	13.73	63.44	4.83	-1.09	0.00	0.00
26.45	-1.82	0.05	13.76	13.77	63.45	4.02	-0.91	0.00	0.00
26.46	-1.46	0.04	13.81	13.82	63.46	3.19	-0.72	0.00	0.00
26.47	-1.09	0.03	13.86	13.86	63.47	2.39	-0.54	0.00	0.00
26.48	-0.73	0.02	13.90	13.91	63.48	1.60	-0.36	0.00	0.00
26.49	-0.36	0.01	13.95	13.95	63.49	0.80	-0.18	0.00	0.00
26.5	0.00	0.00	14.00	14.00	63.5	0.00	0.00	0.00	0.00
26.51	0.36	-0.01	14.05	14.05	63.51	-0.80	0.18	0.00	0.00
26.52	0.73	-0.02	14.10	14.09	63.52	-1.59	0.36	0.00	0.00
26.53	1.09	-0.03	14.14	14.14	63.53	-2.41	0.54	0.00	0.00
26.54	1.46	-0.04	14.19	14.18	63.54	-3.21	0.72	0.00	0.00
26.55	1.82	-0.05	14.24	14.23	63.55	-4.00	0.90	0.00	0.00
26.56	2.18	-0.05	14.29	14.27	63.56	-4.80	1.08	0.00	0.00
26.57	2.55	-0.06	14.33	14.32	63.57	-5.60	1.27	0.00	0.00
26.58	2.91	-0.07	14.38	14.37	63.58	-6.40	1.45	0.00	0.00

26.59	3.28	-0.08	14.43	14.41	63.59	-7.20	1.63	0.00	0.00
26.6	3.64	-0.09	14.48	14.46	63.6	-8.00	1.81	0.00	0.00
26.61	4.00	-0.10	14.53	14.50	63.61	-8.80	1.99	0.00	0.00
26.62	4.37	-0.11	14.57	14.55	63.62	-9.60	2.17	0.00	0.00
26.63	4.73	-0.12	14.62	14.59	63.63	-10.68	2.30	0.00	0.00
26.64	5.10	-0.13	14.67	14.64	63.64	-11.42	2.37	0.00	0.00
26.65	5.46	-0.14	14.72	14.69	63.65	-11.96	2.41	0.00	0.00
26.66	5.82	-0.15	14.77	14.73	63.66	-12.78	2.46	0.00	0.00
26.67	6.19	-0.15	14.81	14.78	63.67	-13.63	2.51	0.00	0.00
26.68	6.55	-0.16	14.86	14.82	63.68	-14.41	2.56	0.00	0.00
26.69	6.92	-0.17	14.91	14.87	63.69	-15.25	2.60	0.00	0.00
26.7	7.28	-0.18	14.96	14.92	63.7	-16.00	2.63	0.00	0.00
26.71	7.64	-0.19	15.01	14.96	63.71	-16.79	2.66	0.00	0.00
26.72	8.01	-0.20	15.05	15.01	63.72	-17.61	2.70	0.00	0.00
26.73	8.37	-0.21	15.10	15.05	63.73	-18.40	2.73	0.00	0.00
26.74	8.74	-0.22	15.15	15.10	63.74	-19.20	2.76	0.00	0.00
26.75	9.10	-0.23	15.20	15.14	63.75	-20.00	2.79	0.00	0.00
26.76	9.46	-0.24	15.25	15.19	63.76	-20.80	2.83	0.00	0.00
26.77	9.83	-0.25	15.29	15.24	63.77	-21.60	2.86	0.00	0.00
26.78	10.19	-0.25	15.34	15.28	63.78	-22.40	2.89	0.00	0.00
26.79	10.56	-0.26	15.39	15.33	63.79	-23.20	2.92	0.00	0.00
26.8	10.92	-0.27	15.44	15.37	63.8	-24.00	2.96	0.00	0.00
26.81	11.28	-0.28	15.51	15.46	63.81	-24.80	2.99	0.00	0.00
26.82	11.64	-0.29	15.63	15.62	63.82	-25.60	3.02	0.00	0.00
26.83	12.01	-0.30	15.78	15.83	63.83	-26.40	3.05	0.00	0.00
26.84	12.37	-0.32	15.95	16.09	63.84	-27.20	3.09	0.00	0.00
26.85	12.74	-0.33	16.15	16.37	63.85	-28.00	3.12	0.00	0.00
26.86	13.10	-0.34	16.36	16.69	63.86	-28.80	3.15	0.00	0.00
26.87	13.47	-0.36	16.58	17.02	63.87	-29.60	3.18	0.00	0.00
26.88	13.83	-0.37	16.82	17.38	63.88	-30.40	3.22	0.00	0.00
26.89	14.20	-0.38	17.07	17.76	63.89	-31.20	3.25	0.00	0.00
26.9	14.56	-0.40	17.32	18.13	63.9	-32.00	3.28	0.00	0.00
26.91	14.92	-0.41	17.57	18.51	63.91	-32.80	3.31	0.00	0.00
26.92	15.29	-0.42	17.84	18.91	63.92	-33.60	3.35	0.00	0.00
26.93	15.65	-0.44	18.11	19.31	63.93	-34.40	3.38	0.00	0.00
26.94	16.02	-0.45	18.38	19.72	63.94	-35.20	3.41	0.00	0.00
26.95	16.38	-0.47	18.65	20.13	63.95	-36.00	3.44	0.00	0.00
26.96	16.74	-0.48	18.91	20.53	63.96	-36.80	3.48	0.00	0.00
26.97	17.11	-0.50	19.18	20.94	63.97	-37.60	3.51	0.00	0.00
26.98	17.47	-0.51	19.46	21.36	63.98	-38.40	3.54	0.00	0.00
26.99	17.84	-0.52	19.74	21.78	63.99	-39.20	3.57	0.00	0.00
27	18.20	-0.54	20.02	22.20	64	-39.93	3.62	0.00	0.00
27.01	18.01	-0.53	19.83	21.91	64.01	-39.65	3.60	0.00	0.00
27.02	17.42	-0.51	19.44	21.32	64.02	-38.20	3.55	0.00	0.00
27.03	17.09	-0.50	19.18	20.93	64.03	-37.52	3.52	0.00	0.00
27.04	16.77	-0.48	18.92	20.55	64.04	-36.65	3.48	0.00	0.00
27.05	16.37	-0.47	18.64	20.12	64.05	-35.78	3.45	0.00	0.00
27.06	16.01	-0.45	18.37	19.72	64.06	-34.96	3.42	0.00	0.00
27.07	15.66	-0.44	18.11	19.32	64.07	-34.12	3.38	0.00	0.00
27.08	15.29	-0.42	17.84	18.91	64.08	-33.27	3.35	0.00	0.00
27.09	14.92	-0.41	17.57	18.51	64.09	-32.43	3.31	0.00	0.00
27.1	14.56	-0.40	17.32	18.13	64.1	-31.59	3.28	0.00	0.00
27.11	14.20	-0.38	17.07	17.75	64.11	-30.75	3.24	0.00	0.00
27.12	13.83	-0.37	16.82	17.38	64.12	-29.91	3.21	0.00	0.00
27.13	13.47	-0.36	16.59	17.03	64.13	-29.07	3.18	0.00	0.00
27.14	13.10	-0.34	16.36	16.69	64.14	-28.23	3.14	0.00	0.00
27.15	12.74	-0.33	16.15	16.37	64.15	-27.39	3.11	0.00	0.00

27.16	12.38	-0.32	15.95	16.08	64.16	-26.54	3.07	0.00	0.00
27.17	12.01	-0.30	15.77	15.82	64.17	-25.70	3.04	0.00	0.00
27.18	11.65	-0.29	15.63	15.62	64.18	-24.86	3.01	0.00	0.00
27.19	11.28	-0.28	15.51	15.46	64.19	-24.02	2.97	0.00	0.00
27.2	10.92	-0.27	15.44	15.38	64.2	-23.18	2.94	0.00	0.00
27.21	10.56	-0.26	15.39	15.33	64.21	-22.34	2.90	0.00	0.00
27.22	10.19	-0.25	15.34	15.28	64.22	-21.50	2.87	0.00	0.00
27.23	9.83	-0.25	15.29	15.24	64.23	-20.66	2.83	0.00	0.00
27.24	9.46	-0.24	15.25	15.19	64.24	-19.82	2.80	0.00	0.00
27.25	9.10	-0.23	15.20	15.14	64.25	-18.98	2.77	0.00	0.00
27.26	8.74	-0.22	15.15	15.10	64.26	-18.13	2.73	0.00	0.00
27.27	8.37	-0.21	15.10	15.05	64.27	-17.29	2.70	0.00	0.00
27.28	8.01	-0.20	15.05	15.01	64.28	-16.45	2.66	0.00	0.00
27.29	7.64	-0.19	15.01	14.96	64.29	-15.61	2.63	0.00	0.00
27.3	7.28	-0.18	14.96	14.92	64.3	-14.78	2.59	0.00	0.00
27.31	6.92	-0.17	14.91	14.87	64.31	-13.98	2.55	0.00	0.00
27.32	6.55	-0.16	14.86	14.82	64.32	-13.10	2.49	0.00	0.00
27.33	6.19	-0.15	14.81	14.78	64.33	-12.24	2.44	0.00	0.00
27.34	5.82	-0.15	14.77	14.73	64.34	-11.41	2.39	0.00	0.00
27.35	5.46	-0.14	14.72	14.69	64.35	-10.57	2.33	0.00	0.00
27.36	5.10	-0.13	14.67	14.64	64.36	-10.05	2.25	0.00	0.00
27.37	4.73	-0.12	14.62	14.59	64.37	-9.27	2.07	0.00	0.00
27.38	4.37	-0.11	14.57	14.55	64.38	-8.13	1.83	0.00	0.00
27.39	4.00	-0.10	14.53	14.50	64.39	-7.07	1.61	0.00	0.00
27.4	3.64	-0.09	14.48	14.46	64.4	-6.25	1.42	0.00	0.00
27.41	3.28	-0.08	14.43	14.41	64.41	-5.51	1.25	0.00	0.00
27.42	2.91	-0.07	14.38	14.37	64.42	-4.73	1.07	0.00	0.00
27.43	2.55	-0.06	14.33	14.32	64.43	-3.87	0.87	0.00	0.00
27.44	2.18	-0.05	14.29	14.27	64.44	-2.99	0.68	0.00	0.00
27.45	1.82	-0.05	14.24	14.23	64.45	-2.14	0.48	0.00	0.00
27.46	1.46	-0.04	14.19	14.18	64.46	-1.31	0.30	0.00	0.00
27.47	1.09	-0.03	14.14	14.14	64.47	-0.48	0.11	0.00	0.00
27.48	0.73	-0.02	14.10	14.09	64.48	0.39	-0.08	0.00	0.00
27.49	0.36	-0.01	14.05	14.05	64.49	1.19	-0.27	0.00	0.00
27.5	0.00	0.00	14.00	14.00	64.5	2.06	-0.46	0.00	0.00
27.51	-0.36	0.01	13.95	13.95	64.51	2.90	-0.66	0.00	0.00
27.52	-0.73	0.02	13.90	13.91	64.52	3.74	-0.85	0.00	0.00
27.53	-1.09	0.03	13.86	13.86	64.53	4.57	-1.03	0.00	0.00
27.54	-1.46	0.04	13.81	13.82	64.54	5.41	-1.22	0.00	0.00
27.55	-1.82	0.05	13.76	13.77	64.55	6.25	-1.41	0.00	0.00
27.56	-2.18	0.05	13.71	13.73	64.56	7.10	-1.60	0.00	0.00
27.57	-2.55	0.06	13.66	13.68	64.57	7.94	-1.79	0.00	0.00
27.58	-2.91	0.07	13.62	13.63	64.58	8.78	-1.98	0.00	0.00
27.59	-3.28	0.08	13.57	13.59	64.59	9.62	-2.17	0.00	0.00
27.6	-3.64	0.09	13.52	13.54	64.6	10.89	-2.34	1.16	0.00
27.61	-4.00	0.10	13.47	13.50	64.61	11.50	-2.39	2.18	0.00
27.62	-4.37	0.11	13.42	13.45	64.62	11.99	-2.43	3.22	0.00
27.63	-4.73	0.12	13.38	13.41	64.63	12.98	-2.49	4.89	0.00
27.64	-5.10	0.13	13.33	13.36	64.64	13.87	-2.54	6.45	0.00
27.65	-5.46	0.14	13.28	13.32	64.65	14.68	-2.59	7.69	0.28
27.66	-5.82	0.15	13.23	13.27	64.66	15.54	-2.62	8.53	1.16
27.67	-6.19	0.15	13.18	13.22	64.67	16.35	-2.66	9.22	2.11
27.68	-6.55	0.16	13.14	13.18	64.68	17.18	-2.69	9.91	3.12
27.69	-6.92	0.17	13.09	13.13	64.69	18.03	-2.73	10.60	4.15
27.7	-7.28	0.18	13.04	13.09	64.7	18.87	-2.76	11.28	5.18
27.71	-7.64	0.19	12.99	13.04	64.71	19.71	-2.80	11.96	6.21
27.72	-8.01	0.20	12.94	13.00	64.72	20.55	-2.83	12.64	7.24

27.73	-8.37	0.21	12.90	12.95	64.73	21.39	-2.86	13.32	8.27
27.74	-8.74	0.22	12.85	12.90	64.74	22.23	-2.90	14.00	9.30
27.75	-9.10	0.23	12.80	12.86	64.75	23.08	-2.93	14.68	10.33
27.76	-9.46	0.24	12.75	12.81	64.76	23.92	-2.97	15.37	11.36
27.77	-9.83	0.25	12.70	12.77	64.77	24.76	-3.00	16.05	12.39
27.78	-10.19	0.25	12.66	12.72	64.78	25.60	-3.03	16.73	13.42
27.79	-10.56	0.26	12.61	12.68	64.79	26.44	-3.07	17.41	14.45
27.8	-10.92	0.27	12.56	12.63	64.8	27.28	-3.10	18.09	15.48
27.81	-11.28	0.28	12.51	12.58	64.81	28.12	-3.14	18.77	16.50
27.82	-11.64	0.29	12.45	12.52	64.82	28.96	-3.17	19.45	17.53
27.83	-12.01	0.30	12.39	12.45	64.83	29.80	-3.21	20.14	18.56
27.84	-12.37	0.32	12.32	12.38	64.84	30.64	-3.24	20.82	19.59
27.85	-12.74	0.33	12.26	12.30	64.85	31.49	-3.27	21.50	20.62
27.86	-13.10	0.34	12.19	12.22	64.86	32.33	-3.31	22.18	21.65
27.87	-13.47	0.36	12.12	12.14	64.87	33.17	-3.34	22.86	22.68
27.88	-13.83	0.37	12.05	12.06	64.88	34.01	-3.38	23.54	23.71
27.89	-14.20	0.38	11.98	11.98	64.89	34.85	-3.41	24.22	24.74
27.9	-14.56	0.40	11.91	11.90	64.9	35.69	-3.44	24.91	25.77
27.91	-14.92	0.41	11.84	11.81	64.91	36.53	-3.48	25.59	26.80
27.92	-15.29	0.42	11.77	11.73	64.92	37.37	-3.51	26.27	27.83
27.93	-15.65	0.44	11.70	11.64	64.93	38.21	-3.55	26.95	28.86
27.94	-16.02	0.45	11.63	11.56	64.94	39.05	-3.58	27.63	29.89
27.95	-16.38	0.47	11.56	11.48	64.95	39.88	-3.62	28.29	30.89
27.96	-16.74	0.48	11.48	11.39	64.96	40.47	-3.70	28.58	31.27
27.97	-17.11	0.50	11.41	11.31	64.97	41.37	-3.85	28.85	31.60
27.98	-17.47	0.51	11.35	11.23	64.98	42.44	-4.02	29.11	31.92
27.99	-17.84	0.52	11.28	11.14	64.99	43.34	-4.18	29.34	32.20
28	-18.20	0.54	11.21	11.06	65	44.13	-4.32	29.55	32.45
28.01	-18.01	0.53	11.26	11.12	65.01	44.12	-4.31	29.34	32.15
28.02	-17.42	0.51	11.35	11.23	65.02	42.12	-4.24	27.95	30.03
28.03	-17.09	0.50	11.42	11.31	65.03	41.32	-4.21	27.35	29.14
28.04	-16.77	0.48	11.48	11.39	65.04	40.73	-4.18	26.73	28.20
28.05	-16.37	0.47	11.56	11.48	65.05	39.64	-4.14	25.94	27.01
28.06	-16.01	0.45	11.63	11.56	65.06	38.80	-4.10	25.23	25.94
28.07	-15.66	0.44	11.70	11.64	65.07	37.94	-4.07	24.54	24.89
28.08	-15.29	0.42	11.77	11.73	65.08	37.04	-4.03	23.81	23.79
28.09	-14.92	0.41	11.84	11.81	65.09	36.16	-3.99	23.10	22.71
28.1	-14.56	0.40	11.91	11.90	65.1	35.28	-3.96	22.39	21.63
28.11	-14.20	0.38	11.98	11.98	65.11	34.40	-3.92	21.67	20.55
28.12	-13.83	0.37	12.05	12.06	65.12	33.52	-3.89	20.96	19.47
28.13	-13.47	0.36	12.12	12.14	65.13	32.63	-3.85	20.24	18.39
28.14	-13.10	0.34	12.19	12.22	65.14	31.75	-3.82	19.53	17.31
28.15	-12.74	0.33	12.26	12.30	65.15	30.87	-3.78	18.81	16.23
28.16	-12.38	0.32	12.32	12.38	65.16	29.99	-3.74	18.10	15.15
28.17	-12.01	0.30	12.39	12.45	65.17	29.11	-3.71	17.38	14.08
28.18	-11.65	0.29	12.45	12.52	65.18	28.22	-3.67	16.67	13.00
28.19	-11.28	0.28	12.51	12.58	65.19	27.34	-3.64	15.95	11.92
28.2	-10.92	0.27	12.56	12.63	65.2	26.46	-3.60	15.24	10.84
28.21	-10.56	0.26	12.61	12.68	65.21	25.58	-3.56	14.52	9.76
28.22	-10.19	0.25	12.66	12.72	65.22	24.70	-3.53	13.81	8.68
28.23	-9.83	0.25	12.70	12.77	65.23	23.81	-3.49	13.09	7.60
28.24	-9.46	0.24	12.75	12.81	65.24	22.93	-3.46	12.38	6.52
28.25	-9.10	0.23	12.80	12.86	65.25	22.05	-3.42	11.67	5.44
28.26	-8.74	0.22	12.85	12.90	65.26	21.17	-3.39	10.95	4.36
28.27	-8.37	0.21	12.90	12.95	65.27	20.29	-3.35	10.24	3.28
28.28	-8.01	0.20	12.94	13.00	65.28	19.40	-3.31	9.52	2.20
28.29	-7.64	0.19	12.99	13.04	65.29	18.52	-3.28	8.81	1.12

28.3	-7.28	0.18	13.04	13.09	65.3	17.66	-3.24	7.93	0.28
28.31	-6.92	0.17	13.09	13.13	65.31	16.81	-3.19	6.57	0.07
28.32	-6.55	0.16	13.14	13.18	65.32	15.88	-3.13	4.97	0.02
28.33	-6.19	0.15	13.18	13.22	65.33	14.98	-3.08	3.40	0.00
28.34	-5.82	0.15	13.23	13.27	65.34	14.12	-3.02	1.85	0.00
28.35	-5.46	0.14	13.28	13.32	65.35	13.28	-2.96	0.46	0.00
28.36	-5.10	0.13	13.33	13.36	65.36	12.65	-2.83	0.12	0.00
28.37	-4.73	0.12	13.38	13.41	65.37	11.73	-2.63	0.03	0.00
28.38	-4.37	0.11	13.42	13.45	65.38	10.60	-2.40	0.01	0.00
28.39	-4.00	0.10	13.47	13.50	65.39	9.60	-2.18	0.00	0.00
28.4	-3.64	0.09	13.52	13.54	65.4	8.75	-1.98	0.00	0.00
28.41	-3.28	0.08	13.57	13.59	65.41	7.95	-1.80	0.00	0.00
28.42	-2.91	0.07	13.62	13.63	65.42	7.09	-1.60	0.00	0.00
28.43	-2.55	0.06	13.66	13.68	65.43	6.19	-1.40	0.00	0.00
28.44	-2.18	0.05	13.71	13.73	65.44	5.28	-1.20	0.00	0.00
28.45	-1.82	0.05	13.76	13.77	65.45	4.40	-1.00	0.00	0.00
28.46	-1.46	0.04	13.81	13.82	65.46	3.53	-0.80	0.00	0.00
28.47	-1.09	0.03	13.86	13.86	65.47	2.65	-0.60	0.00	0.00
28.48	-0.73	0.02	13.90	13.91	65.48	1.77	-0.40	0.00	0.00
28.49	-0.36	0.01	13.95	13.95	65.49	0.88	-0.20	0.00	0.00
28.5	0.00	0.00	14.00	14.00	65.5	-0.02	0.00	0.00	0.00
28.51	0.36	-0.01	14.05	14.05	65.51	-0.86	0.19	0.00	0.00
28.52	0.73	-0.02	14.10	14.09	65.52	-1.76	0.40	0.00	0.00
28.53	1.09	-0.03	14.14	14.14	65.53	-2.65	0.60	0.00	0.00
28.54	1.46	-0.04	14.19	14.18	65.54	-3.54	0.80	0.00	0.00
28.55	1.82	-0.05	14.24	14.23	65.55	-4.41	1.00	0.00	0.00
28.56	2.18	-0.05	14.29	14.27	65.56	-5.29	1.20	0.00	0.00
28.57	2.55	-0.06	14.33	14.32	65.57	-6.17	1.40	0.00	0.00
28.58	2.91	-0.07	14.38	14.37	65.58	-7.06	1.60	0.00	0.00
28.59	3.28	-0.08	14.43	14.41	65.59	-7.94	1.80	0.00	0.00
28.6	3.64	-0.09	14.48	14.46	65.6	-8.82	1.99	0.00	0.00
28.61	4.00	-0.10	14.53	14.50	65.61	-9.70	2.19	0.00	0.00
28.62	4.37	-0.11	14.57	14.55	65.62	-10.93	2.33	0.00	0.00
28.63	4.73	-0.12	14.62	14.59	65.63	-11.67	2.39	0.00	0.00
28.64	5.10	-0.13	14.67	14.64	65.64	-12.29	2.44	0.00	0.00
28.65	5.46	-0.14	14.72	14.69	65.65	-13.23	2.50	0.00	0.00
28.66	5.82	-0.15	14.77	14.73	65.66	-14.14	2.56	0.00	0.00
28.67	6.19	-0.15	14.81	14.78	65.67	-15.04	2.60	0.00	0.00
28.68	6.55	-0.16	14.86	14.82	65.68	-15.89	2.64	0.00	0.00
28.69	6.92	-0.17	14.91	14.87	65.69	-16.75	2.68	0.00	0.00
28.7	7.28	-0.18	14.96	14.92	65.7	-17.64	2.71	0.00	0.00
28.71	7.64	-0.19	15.01	14.96	65.71	-18.52	2.75	0.00	0.00
28.72	8.01	-0.20	15.05	15.01	65.72	-19.40	2.78	0.00	0.00
28.73	8.37	-0.21	15.10	15.05	65.73	-20.29	2.82	0.00	0.00
28.74	8.74	-0.22	15.15	15.10	65.74	-21.17	2.86	0.00	0.00
28.75	9.10	-0.23	15.20	15.14	65.75	-22.05	2.89	0.00	0.00
28.76	9.46	-0.24	15.25	15.19	65.76	-22.93	2.93	0.00	0.00
28.77	9.83	-0.25	15.29	15.24	65.77	-23.81	2.96	0.00	0.00
28.78	10.19	-0.25	15.34	15.28	65.78	-24.70	3.00	0.00	0.00
28.79	10.56	-0.26	15.39	15.33	65.79	-25.58	3.03	0.00	0.00
28.8	10.92	-0.27	15.44	15.37	65.8	-26.46	3.07	0.00	0.00
28.81	11.28	-0.28	15.51	15.46	65.81	-27.34	3.11	0.00	0.00
28.82	11.64	-0.29	15.63	15.62	65.82	-28.22	3.14	0.00	0.00
28.83	12.01	-0.30	15.78	15.83	65.83	-29.11	3.18	0.00	0.00
28.84	12.37	-0.32	15.95	16.09	65.84	-29.99	3.21	0.00	0.00
28.85	12.74	-0.33	16.15	16.37	65.85	-30.87	3.25	0.00	0.00
28.86	13.10	-0.34	16.36	16.69	65.86	-31.75	3.29	0.00	0.00

28.87	13.47	-0.36	16.58	17.02	65.87	-32.63	3.32	0.00	0.00
28.88	13.83	-0.37	16.82	17.38	65.88	-33.52	3.36	0.00	0.00
28.89	14.20	-0.38	17.07	17.76	65.89	-34.40	3.39	0.00	0.00
28.9	14.56	-0.40	17.32	18.13	65.9	-35.28	3.43	0.00	0.00
28.91	14.92	-0.41	17.57	18.51	65.91	-36.16	3.46	0.00	0.00
28.92	15.29	-0.42	17.84	18.91	65.92	-37.04	3.50	0.00	0.00
28.93	15.65	-0.44	18.11	19.31	65.93	-37.93	3.54	0.00	0.00
28.94	16.02	-0.45	18.38	19.72	65.94	-38.81	3.57	0.00	0.00
28.95	16.38	-0.47	18.65	20.13	65.95	-39.69	3.61	0.00	0.00
28.96	16.74	-0.48	18.91	20.53	65.96	-40.34	3.68	0.00	0.00
28.97	17.11	-0.50	19.18	20.94	65.97	-41.21	3.83	0.00	0.00
28.98	17.47	-0.51	19.46	21.36	65.98	-42.31	4.00	0.00	0.00
28.99	17.84	-0.52	19.74	21.78	65.99	-43.29	4.17	0.00	0.00
29	18.20	-0.54	20.02	22.20	66	-44.14	4.32	0.00	0.00
29.01	18.01	-0.53	19.83	21.91	66.01	-44.17	4.31	0.00	0.00
29.02	17.42	-0.51	19.44	21.32	66.02	-42.11	4.24	0.00	0.00
29.03	17.09	-0.50	19.18	20.93	66.03	-41.31	4.21	0.00	0.00
29.04	16.77	-0.48	18.92	20.55	66.04	-40.73	4.18	0.00	0.00
29.05	16.37	-0.47	18.64	20.12	66.05	-39.64	4.14	0.00	0.00
29.06	16.01	-0.45	18.37	19.72	66.06	-38.80	4.10	0.00	0.00
29.07	15.66	-0.44	18.11	19.32	66.07	-37.94	4.07	0.00	0.00
29.08	15.29	-0.42	17.84	18.91	66.08	-37.04	4.03	0.00	0.00
29.09	14.92	-0.41	17.57	18.51	66.09	-36.16	4.00	0.00	0.00
29.1	14.56	-0.40	17.32	18.13	66.1	-35.28	3.96	0.00	0.00
29.11	14.20	-0.38	17.07	17.75	66.11	-34.40	3.92	0.00	0.00
29.12	13.83	-0.37	16.82	17.38	66.12	-33.52	3.89	0.00	0.00
29.13	13.47	-0.36	16.59	17.03	66.13	-32.63	3.85	0.00	0.00
29.14	13.10	-0.34	16.36	16.69	66.14	-31.75	3.82	0.00	0.00
29.15	12.74	-0.33	16.15	16.37	66.15	-30.87	3.78	0.00	0.00
29.16	12.38	-0.32	15.95	16.08	66.16	-29.99	3.74	0.00	0.00
29.17	12.01	-0.30	15.77	15.82	66.17	-29.11	3.71	0.00	0.00
29.18	11.65	-0.29	15.63	15.62	66.18	-28.22	3.67	0.00	0.00
29.19	11.28	-0.28	15.51	15.46	66.19	-27.34	3.64	0.00	0.00
29.2	10.92	-0.27	15.44	15.38	66.2	-26.46	3.60	0.00	0.00
29.21	10.56	-0.26	15.39	15.33	66.21	-25.58	3.57	0.00	0.00
29.22	10.19	-0.25	15.34	15.28	66.22	-24.70	3.53	0.00	0.00
29.23	9.83	-0.25	15.29	15.24	66.23	-23.81	3.49	0.00	0.00
29.24	9.46	-0.24	15.25	15.19	66.24	-22.93	3.46	0.00	0.00
29.25	9.10	-0.23	15.20	15.14	66.25	-22.05	3.42	0.00	0.00
29.26	8.74	-0.22	15.15	15.10	66.26	-21.17	3.39	0.00	0.00
29.27	8.37	-0.21	15.10	15.05	66.27	-20.29	3.35	0.00	0.00
29.28	8.01	-0.20	15.05	15.01	66.28	-19.40	3.32	0.00	0.00
29.29	7.64	-0.19	15.01	14.96	66.29	-18.52	3.28	0.00	0.00
29.3	7.28	-0.18	14.96	14.92	66.3	-17.66	3.24	0.00	0.00
29.31	6.92	-0.17	14.91	14.87	66.31	-16.81	3.19	0.00	0.00
29.32	6.55	-0.16	14.86	14.82	66.32	-15.88	3.13	0.00	0.00
29.33	6.19	-0.15	14.81	14.78	66.33	-14.98	3.08	0.00	0.00
29.34	5.82	-0.15	14.77	14.73	66.34	-14.12	3.02	0.00	0.00
29.35	5.46	-0.14	14.72	14.69	66.35	-13.28	2.96	0.00	0.00
29.36	5.10	-0.13	14.67	14.64	66.36	-12.65	2.83	0.00	0.00
29.37	4.73	-0.12	14.62	14.59	66.37	-11.73	2.63	0.00	0.00
29.38	4.37	-0.11	14.57	14.55	66.38	-10.60	2.40	0.00	0.00
29.39	4.00	-0.10	14.53	14.50	66.39	-9.60	2.18	0.00	0.00
29.4	3.64	-0.09	14.48	14.46	66.4	-8.75	1.98	0.00	0.00
29.41	3.28	-0.08	14.43	14.41	66.41	-7.95	1.80	0.00	0.00
29.42	2.91	-0.07	14.38	14.37	66.42	-7.09	1.60	0.00	0.00
29.43	2.55	-0.06	14.33	14.32	66.43	-6.19	1.40	0.00	0.00

29.44	2.18	-0.05	14.29	14.27	66.44	-5.28	1.20	0.00	0.00
29.45	1.82	-0.05	14.24	14.23	66.45	-4.40	1.00	0.00	0.00
29.46	1.46	-0.04	14.19	14.18	66.46	-3.53	0.80	0.00	0.00
29.47	1.09	-0.03	14.14	14.14	66.47	-2.65	0.60	0.00	0.00
29.48	0.73	-0.02	14.10	14.09	66.48	-1.77	0.40	0.00	0.00
29.49	0.36	-0.01	14.05	14.05	66.49	-0.88	0.20	0.00	0.00
29.5	0.00	0.00	14.00	14.00	66.5	0.02	0.00	0.00	0.00
29.51	-0.36	0.01	13.95	13.95	66.51	0.86	-0.19	0.00	0.00
29.52	-0.73	0.02	13.90	13.91	66.52	1.76	-0.40	0.00	0.00
29.53	-1.09	0.03	13.86	13.86	66.53	2.65	-0.60	0.00	0.00
29.54	-1.46	0.04	13.81	13.82	66.54	3.54	-0.80	0.00	0.00
29.55	-1.82	0.05	13.76	13.77	66.55	4.41	-1.00	0.00	0.00
29.56	-2.18	0.05	13.71	13.73	66.56	5.29	-1.20	0.00	0.00
29.57	-2.55	0.06	13.66	13.68	66.57	6.17	-1.40	0.00	0.00
29.58	-2.91	0.07	13.62	13.63	66.58	7.06	-1.60	0.00	0.00
29.59	-3.28	0.08	13.57	13.59	66.59	7.94	-1.80	0.00	0.00
29.6	-3.64	0.09	13.52	13.54	66.6	8.82	-1.99	0.00	0.00
29.61	-4.00	0.10	13.47	13.50	66.61	9.70	-2.19	0.00	0.00
29.62	-4.37	0.11	13.42	13.45	66.62	10.58	-2.39	0.00	0.00
29.63	-4.73	0.12	13.38	13.41	66.63	11.47	-2.59	0.00	0.00
29.64	-5.10	0.13	13.33	13.36	66.64	12.35	-2.79	0.00	0.00
29.65	-5.46	0.14	13.28	13.32	66.65	13.48	-2.95	0.94	0.00
29.66	-5.82	0.15	13.23	13.27	66.66	14.40	-3.03	2.29	0.00
29.67	-6.19	0.15	13.18	13.22	66.67	14.88	-3.07	3.31	0.00
29.68	-6.55	0.16	13.14	13.18	66.68	15.89	-3.13	5.00	0.00
29.69	-6.92	0.17	13.09	13.13	66.69	16.79	-3.19	6.59	0.00
29.7	-7.28	0.18	13.04	13.09	66.7	17.66	-3.24	7.90	0.31
29.71	-7.64	0.19	12.99	13.04	66.71	18.56	-3.28	8.78	1.22
29.72	-8.01	0.20	12.94	13.00	66.72	19.41	-3.31	9.51	2.21
29.73	-8.37	0.21	12.90	12.95	66.73	20.28	-3.35	10.23	3.28
29.74	-8.74	0.22	12.85	12.90	66.74	21.17	-3.39	10.95	4.36
29.75	-9.10	0.23	12.80	12.86	66.75	22.05	-3.42	11.67	5.44
29.76	-9.46	0.24	12.75	12.81	66.76	22.93	-3.46	12.38	6.52
29.77	-9.83	0.25	12.70	12.77	66.77	23.81	-3.49	13.10	7.60
29.78	-10.19	0.25	12.66	12.72	66.78	24.70	-3.53	13.81	8.68
29.79	-10.56	0.26	12.61	12.68	66.79	25.58	-3.56	14.52	9.76
29.8	-10.92	0.27	12.56	12.63	66.8	26.46	-3.60	15.24	10.84
29.81	-11.28	0.28	12.51	12.58	66.81	27.34	-3.64	15.95	11.92
29.82	-11.64	0.29	12.45	12.52	66.82	28.22	-3.67	16.67	13.00
29.83	-12.01	0.30	12.39	12.45	66.83	29.11	-3.71	17.38	14.08
29.84	-12.37	0.32	12.32	12.38	66.84	29.99	-3.74	18.10	15.15
29.85	-12.74	0.33	12.26	12.30	66.85	30.87	-3.78	18.81	16.23
29.86	-13.10	0.34	12.19	12.22	66.86	31.75	-3.82	19.53	17.31
29.87	-13.47	0.36	12.12	12.14	66.87	32.63	-3.85	20.24	18.39
29.88	-13.83	0.37	12.05	12.06	66.88	33.52	-3.89	20.96	19.47
29.89	-14.20	0.38	11.98	11.98	66.89	34.40	-3.92	21.67	20.55
29.9	-14.56	0.40	11.91	11.90	66.9	35.28	-3.96	22.39	21.63
29.91	-14.92	0.41	11.84	11.81	66.91	36.16	-3.99	23.10	22.71
29.92	-15.29	0.42	11.77	11.73	66.92	37.04	-4.03	23.81	23.79
29.93	-15.65	0.44	11.70	11.64	66.93	37.93	-4.07	24.53	24.87
29.94	-16.02	0.45	11.63	11.56	66.94	38.81	-4.10	25.24	25.95
29.95	-16.38	0.47	11.56	11.48	66.95	39.69	-4.14	25.96	27.03
29.96	-16.74	0.48	11.48	11.39	66.96	40.57	-4.17	26.67	28.11
29.97	-17.11	0.50	11.41	11.31	66.97	41.45	-4.21	27.39	29.19
29.98	-17.47	0.51	11.35	11.23	66.98	42.34	-4.24	28.10	30.27
29.99	-17.84	0.52	11.28	11.14	66.99	43.22	-4.28	28.82	31.35
30	-18.20	0.54	11.21	11.06	67	44.01	-4.33	29.40	32.22

30.01	-18.01	0.53	11.26	11.12	67.01	43.76	-4.31	29.05	31.68
30.02	-17.42	0.51	11.35	11.23	67.02	42.21	-4.26	27.95	30.03
30.03	-17.09	0.50	11.42	11.31	67.03	41.51	-4.23	27.33	29.09
30.04	-16.77	0.48	11.48	11.39	67.04	40.59	-4.19	26.61	28.00
30.05	-16.37	0.47	11.56	11.48	67.05	39.67	-4.15	25.88	26.90
30.06	-16.01	0.45	11.63	11.56	67.06	38.81	-4.12	25.18	25.84
30.07	-15.66	0.44	11.70	11.64	67.07	37.93	-4.08	24.46	24.76
30.08	-15.29	0.42	11.77	11.73	67.08	37.04	-4.05	23.75	23.67
30.09	-14.92	0.41	11.84	11.81	67.09	36.16	-4.01	23.03	22.60
30.1	-14.56	0.40	11.91	11.90	67.1	35.28	-3.98	22.32	21.52
30.11	-14.20	0.38	11.98	11.98	67.11	34.40	-3.94	21.60	20.44
30.12	-13.83	0.37	12.05	12.06	67.12	33.52	-3.90	20.89	19.36
30.13	-13.47	0.36	12.12	12.14	67.13	32.63	-3.87	20.17	18.28
30.14	-13.10	0.34	12.19	12.22	67.14	31.75	-3.83	19.46	17.20
30.15	-12.74	0.33	12.26	12.30	67.15	30.87	-3.80	18.75	16.12
30.16	-12.38	0.32	12.32	12.38	67.16	29.99	-3.76	18.03	15.04
30.17	-12.01	0.30	12.39	12.45	67.17	29.11	-3.72	17.32	13.96
30.18	-11.65	0.29	12.45	12.52	67.18	28.22	-3.69	16.60	12.88
30.19	-11.28	0.28	12.51	12.58	67.19	27.34	-3.65	15.89	11.80
30.2	-10.92	0.27	12.56	12.63	67.2	26.46	-3.62	15.17	10.72
30.21	-10.56	0.26	12.61	12.68	67.21	25.58	-3.58	14.46	9.64
30.22	-10.19	0.25	12.66	12.72	67.22	24.70	-3.55	13.74	8.56
30.23	-9.83	0.25	12.70	12.77	67.23	23.81	-3.51	13.03	7.48
30.24	-9.46	0.24	12.75	12.81	67.24	22.93	-3.47	12.31	6.40
30.25	-9.10	0.23	12.80	12.86	67.25	22.05	-3.44	11.60	5.32
30.26	-8.74	0.22	12.85	12.90	67.26	21.17	-3.40	10.88	4.24
30.27	-8.37	0.21	12.90	12.95	67.27	20.29	-3.37	10.17	3.16
30.28	-8.01	0.20	12.94	13.00	67.28	19.40	-3.33	9.46	2.08
30.29	-7.64	0.19	12.99	13.04	67.29	18.52	-3.29	8.74	1.00
30.3	-7.28	0.18	13.04	13.09	67.3	17.67	-3.25	7.80	0.25
30.31	-6.92	0.17	13.09	13.13	67.31	16.80	-3.20	6.40	0.06
30.32	-6.55	0.16	13.14	13.18	67.32	15.88	-3.15	4.81	0.02
30.33	-6.19	0.15	13.18	13.22	67.33	14.99	-3.09	3.25	0.00
30.34	-5.82	0.15	13.23	13.27	67.34	14.12	-3.04	1.69	0.00
30.35	-5.46	0.14	13.28	13.32	67.35	13.31	-2.97	0.42	0.00
30.36	-5.10	0.13	13.33	13.36	67.36	12.65	-2.83	0.11	0.00
30.37	-4.73	0.12	13.38	13.41	67.37	11.70	-2.63	0.03	0.00
30.38	-4.37	0.11	13.42	13.45	67.38	10.58	-2.39	0.01	0.00
30.39	-4.00	0.10	13.47	13.50	67.39	9.61	-2.18	0.00	0.00
30.4	-3.64	0.09	13.52	13.54	67.4	8.76	-1.98	0.00	0.00
30.41	-3.28	0.08	13.57	13.59	67.41	7.95	-1.80	0.00	0.00
30.42	-2.91	0.07	13.62	13.63	67.42	7.09	-1.60	0.00	0.00
30.43	-2.55	0.06	13.66	13.68	67.43	6.19	-1.40	0.00	0.00
30.44	-2.18	0.05	13.71	13.73	67.44	5.28	-1.20	0.00	0.00
30.45	-1.82	0.05	13.76	13.77	67.45	4.40	-1.00	0.00	0.00
30.46	-1.46	0.04	13.81	13.82	67.46	3.53	-0.80	0.00	0.00
30.47	-1.09	0.03	13.86	13.86	67.47	2.65	-0.60	0.00	0.00
30.48	-0.73	0.02	13.90	13.91	67.48	1.77	-0.40	0.00	0.00
30.49	-0.36	0.01	13.95	13.95	67.49	0.88	-0.20	0.00	0.00
30.5	0.00	0.00	14.00	14.00	67.5	-0.02	0.00	0.00	0.00
30.51	0.36	-0.01	14.05	14.05	67.51	-0.86	0.19	0.00	0.00
30.52	0.73	-0.02	14.10	14.09	67.52	-1.76	0.40	0.00	0.00
30.53	1.09	-0.03	14.14	14.14	67.53	-2.65	0.60	0.00	0.00
30.54	1.46	-0.04	14.19	14.18	67.54	-3.54	0.80	0.00	0.00
30.55	1.82	-0.05	14.24	14.23	67.55	-4.41	1.00	0.00	0.00
30.56	2.18	-0.05	14.29	14.27	67.56	-5.29	1.20	0.00	0.00
30.57	2.55	-0.06	14.33	14.32	67.57	-6.17	1.40	0.00	0.00

30.58	2.91	-0.07	14.38	14.37	67.58	-7.06	1.60	0.00	0.00
30.59	3.28	-0.08	14.43	14.41	67.59	-7.94	1.80	0.00	0.00
30.6	3.64	-0.09	14.48	14.46	67.6	-8.82	1.99	0.00	0.00
30.61	4.00	-0.10	14.53	14.50	67.61	-9.70	2.19	0.00	0.00
30.62	4.37	-0.11	14.57	14.55	67.62	-10.58	2.39	0.00	0.00
30.63	4.73	-0.12	14.62	14.59	67.63	-11.47	2.59	0.00	0.00
30.64	5.10	-0.13	14.67	14.64	67.64	-12.35	2.79	0.00	0.00
30.65	5.46	-0.14	14.72	14.69	67.65	-13.47	2.95	0.00	0.00
30.66	5.82	-0.15	14.77	14.73	67.66	-14.40	3.03	0.00	0.00
30.67	6.19	-0.15	14.81	14.78	67.67	-14.87	3.07	0.00	0.00
30.68	6.55	-0.16	14.86	14.82	67.68	-15.85	3.13	0.00	0.00
30.69	6.92	-0.17	14.91	14.87	67.69	-16.79	3.19	0.00	0.00
30.7	7.28	-0.18	14.96	14.92	67.7	-17.66	3.24	0.00	0.00
30.71	7.64	-0.19	15.01	14.96	67.71	-18.56	3.28	0.00	0.00
30.72	8.01	-0.20	15.05	15.01	67.72	-19.41	3.31	0.00	0.00
30.73	8.37	-0.21	15.10	15.05	67.73	-20.28	3.35	0.00	0.00
30.74	8.74	-0.22	15.15	15.10	67.74	-21.17	3.39	0.00	0.00
30.75	9.10	-0.23	15.20	15.14	67.75	-22.05	3.42	0.00	0.00
30.76	9.46	-0.24	15.25	15.19	67.76	-22.93	3.46	0.00	0.00
30.77	9.83	-0.25	15.29	15.24	67.77	-23.81	3.49	0.00	0.00
30.78	10.19	-0.25	15.34	15.28	67.78	-24.70	3.53	0.00	0.00
30.79	10.56	-0.26	15.39	15.33	67.79	-25.58	3.57	0.00	0.00
30.8	10.92	-0.27	15.44	15.37	67.8	-26.46	3.60	0.00	0.00
30.81	11.28	-0.28	15.51	15.46	67.81	-27.34	3.64	0.00	0.00
30.82	11.64	-0.29	15.63	15.62	67.82	-28.22	3.67	0.00	0.00
30.83	12.01	-0.30	15.78	15.83	67.83	-29.11	3.71	0.00	0.00
30.84	12.37	-0.32	15.95	16.09	67.84	-29.99	3.74	0.00	0.00
30.85	12.74	-0.33	16.15	16.37	67.85	-30.87	3.78	0.00	0.00
30.86	13.10	-0.34	16.36	16.69	67.86	-31.75	3.82	0.00	0.00
30.87	13.47	-0.36	16.58	17.02	67.87	-32.63	3.85	0.00	0.00
30.88	13.83	-0.37	16.82	17.38	67.88	-33.52	3.89	0.00	0.00
30.89	14.20	-0.38	17.07	17.76	67.89	-34.40	3.92	0.00	0.00
30.9	14.56	-0.40	17.32	18.13	67.9	-35.28	3.96	0.00	0.00
30.91	14.92	-0.41	17.57	18.51	67.91	-36.16	4.00	0.00	0.00
30.92	15.29	-0.42	17.84	18.91	67.92	-37.04	4.03	0.00	0.00
30.93	15.65	-0.44	18.11	19.31	67.93	-37.93	4.07	0.00	0.00
30.94	16.02	-0.45	18.38	19.72	67.94	-38.81	4.10	0.00	0.00
30.95	16.38	-0.47	18.65	20.13	67.95	-39.69	4.14	0.00	0.00
30.96	16.74	-0.48	18.91	20.53	67.96	-40.57	4.17	0.00	0.00
30.97	17.11	-0.50	19.18	20.94	67.97	-41.45	4.21	0.00	0.00
30.98	17.47	-0.51	19.46	21.36	67.98	-42.34	4.25	0.00	0.00
30.99	17.84	-0.52	19.74	21.78	67.99	-43.22	4.28	0.00	0.00
31	18.20	-0.54	20.02	22.20	68	-44.02	4.33	0.00	0.00
31.01	18.01	-0.53	19.83	21.91	68.01	-43.72	4.31	0.00	0.00
31.02	17.42	-0.51	19.44	21.32	68.02	-42.13	4.26	0.00	0.00
31.03	17.09	-0.50	19.18	20.93	68.03	-41.39	4.22	0.00	0.00
31.04	16.77	-0.48	18.92	20.55	68.04	-40.43	4.18	0.00	0.00
31.05	16.37	-0.47	18.64	20.12	68.05	-39.47	4.15	0.00	0.00
31.06	16.01	-0.45	18.37	19.72	68.06	-38.57	4.11	0.00	0.00
31.07	15.66	-0.44	18.11	19.32	68.07	-37.65	4.07	0.00	0.00
31.08	15.29	-0.42	17.84	18.91	68.08	-36.72	4.03	0.00	0.00
31.09	14.92	-0.41	17.57	18.51	68.09	-35.80	4.00	0.00	0.00
31.1	14.56	-0.40	17.32	18.13	68.1	-34.88	3.96	0.00	0.00
31.11	14.20	-0.38	17.07	17.75	68.11	-33.96	3.92	0.00	0.00
31.12	13.83	-0.37	16.82	17.38	68.12	-33.04	3.88	0.00	0.00
31.13	13.47	-0.36	16.59	17.03	68.13	-32.11	3.85	0.00	0.00
31.14	13.10	-0.34	16.36	16.69	68.14	-31.19	3.81	0.00	0.00

31.15	12.74	-0.33	16.15	16.37	68.15	-30.27	3.77	0.00	0.00
31.16	12.38	-0.32	15.95	16.08	68.16	-29.35	3.73	0.00	0.00
31.17	12.01	-0.30	15.77	15.82	68.17	-28.43	3.70	0.00	0.00
31.18	11.65	-0.29	15.63	15.62	68.18	-27.50	3.66	0.00	0.00
31.19	11.28	-0.28	15.51	15.46	68.19	-26.58	3.62	0.00	0.00
31.2	10.92	-0.27	15.44	15.38	68.2	-25.66	3.59	0.00	0.00
31.21	10.56	-0.26	15.39	15.33	68.21	-24.74	3.55	0.00	0.00
31.22	10.19	-0.25	15.34	15.28	68.22	-23.82	3.51	0.00	0.00
31.23	9.83	-0.25	15.29	15.24	68.23	-22.89	3.47	0.00	0.00
31.24	9.46	-0.24	15.25	15.19	68.24	-21.97	3.44	0.00	0.00
31.25	9.10	-0.23	15.20	15.14	68.25	-21.05	3.40	0.00	0.00
31.26	8.74	-0.22	15.15	15.10	68.26	-20.13	3.36	0.00	0.00
31.27	8.37	-0.21	15.10	15.05	68.27	-19.21	3.32	0.00	0.00
31.28	8.01	-0.20	15.05	15.01	68.28	-18.29	3.29	0.00	0.00
31.29	7.64	-0.19	15.01	14.96	68.29	-17.41	3.24	0.00	0.00
31.3	7.28	-0.18	14.96	14.92	68.3	-16.47	3.18	0.00	0.00
31.31	6.92	-0.17	14.91	14.87	68.31	-15.51	3.12	0.00	0.00
31.32	6.55	-0.16	14.86	14.82	68.32	-14.60	3.07	0.00	0.00
31.33	6.19	-0.15	14.81	14.78	68.33	-13.68	3.01	0.00	0.00
31.34	5.82	-0.15	14.77	14.73	68.34	-13.00	2.91	0.00	0.00
31.35	5.46	-0.14	14.72	14.69	68.35	-12.14	2.72	0.00	0.00
31.36	5.10	-0.13	14.67	14.64	68.36	-11.01	2.48	0.00	0.00
31.37	4.73	-0.12	14.62	14.59	68.37	-9.91	2.25	0.00	0.00
31.38	4.37	-0.11	14.57	14.55	68.38	-8.98	2.03	0.00	0.00
31.39	4.00	-0.10	14.53	14.50	68.39	-8.13	1.84	0.00	0.00
31.4	3.64	-0.09	14.48	14.46	68.4	-7.25	1.64	0.00	0.00
31.41	3.28	-0.08	14.43	14.41	68.41	-6.32	1.43	0.00	0.00
31.42	2.91	-0.07	14.38	14.37	68.42	-5.38	1.22	0.00	0.00
31.43	2.55	-0.06	14.33	14.32	68.43	-4.44	1.01	0.00	0.00
31.44	2.18	-0.05	14.29	14.27	68.44	-3.53	0.80	0.00	0.00
31.45	1.82	-0.05	14.24	14.23	68.45	-2.61	0.59	0.00	0.00
31.46	1.46	-0.04	14.19	14.18	68.46	-1.69	0.38	0.00	0.00
31.47	1.09	-0.03	14.14	14.14	68.47	-0.77	0.17	0.00	0.00
31.48	0.73	-0.02	14.10	14.09	68.48	0.19	-0.03	0.00	0.00
31.49	0.36	-0.01	14.05	14.05	68.49	1.07	-0.24	0.00	0.00
31.5	0.00	0.00	14.00	14.00	68.5	2.00	-0.45	0.00	0.00
31.51	-0.36	0.01	13.95	13.95	68.51	2.94	-0.66	0.00	0.00
31.52	-0.73	0.02	13.90	13.91	68.52	3.86	-0.87	0.00	0.00
31.53	-1.09	0.03	13.86	13.86	68.53	4.76	-1.08	0.00	0.00
31.54	-1.46	0.04	13.81	13.82	68.54	5.68	-1.28	0.00	0.00
31.55	-1.82	0.05	13.76	13.77	68.55	6.61	-1.49	0.00	0.00
31.56	-2.18	0.05	13.71	13.73	68.56	7.53	-1.70	0.00	0.00
31.57	-2.55	0.06	13.66	13.68	68.57	8.46	-1.91	0.00	0.00
31.58	-2.91	0.07	13.62	13.63	68.58	9.38	-2.12	0.00	0.00
31.59	-3.28	0.08	13.57	13.59	68.59	10.30	-2.33	0.00	0.00
31.6	-3.64	0.09	13.52	13.54	68.6	11.22	-2.54	0.00	0.00
31.61	-4.00	0.10	13.47	13.50	68.61	12.14	-2.75	0.00	0.00
31.62	-4.37	0.11	13.42	13.45	68.62	13.18	-2.93	0.44	0.00
31.63	-4.73	0.12	13.38	13.41	68.63	14.39	-3.04	2.13	0.00
31.64	-5.10	0.13	13.33	13.36	68.64	14.76	-3.08	3.00	0.00
31.65	-5.46	0.14	13.28	13.32	68.65	15.82	-3.14	4.73	0.00
31.66	-5.82	0.15	13.23	13.27	68.66	16.79	-3.20	6.43	0.00
31.67	-6.19	0.15	13.18	13.22	68.67	17.69	-3.26	7.84	0.26
31.68	-6.55	0.16	13.14	13.18	68.68	18.64	-3.30	8.77	1.21
31.69	-6.92	0.17	13.09	13.13	68.69	19.52	-3.33	9.53	2.24
31.7	-7.28	0.18	13.04	13.09	68.7	20.43	-3.37	10.29	3.35
31.71	-7.64	0.19	12.99	13.04	68.71	21.37	-3.41	11.04	4.48

31.72	-8.01	0.20	12.94	13.00	68.72	22.28	-3.45	11.79	5.61
31.73	-8.37	0.21	12.90	12.95	68.73	23.21	-3.48	12.53	6.73
31.74	-8.74	0.22	12.85	12.90	68.74	24.13	-3.52	13.28	7.86
31.75	-9.10	0.23	12.80	12.86	68.75	25.05	-3.56	14.03	8.99
31.76	-9.46	0.24	12.75	12.81	68.76	25.97	-3.60	14.78	10.12
31.77	-9.83	0.25	12.70	12.77	68.77	26.89	-3.63	15.52	11.25
31.78	-10.19	0.25	12.66	12.72	68.78	27.82	-3.67	16.27	12.38
31.79	-10.56	0.26	12.61	12.68	68.79	28.74	-3.71	17.02	13.51
31.8	-10.92	0.27	12.56	12.63	68.8	29.66	-3.75	17.77	14.64
31.81	-11.28	0.28	12.51	12.58	68.81	30.58	-3.78	18.51	15.76
31.82	-11.64	0.29	12.45	12.52	68.82	31.50	-3.82	19.26	16.89
31.83	-12.01	0.30	12.39	12.45	68.83	32.43	-3.86	20.01	18.02
31.84	-12.37	0.32	12.32	12.38	68.84	33.35	-3.90	20.75	19.15
31.85	-12.74	0.33	12.26	12.30	68.85	34.27	-3.93	21.50	20.28
31.86	-13.10	0.34	12.19	12.22	68.86	35.19	-3.97	22.25	21.41
31.87	-13.47	0.36	12.12	12.14	68.87	36.11	-4.01	22.99	22.54
31.88	-13.83	0.37	12.05	12.06	68.88	37.04	-4.05	23.74	23.67
31.89	-14.20	0.38	11.98	11.98	68.89	37.96	-4.08	24.49	24.79
31.9	-14.56	0.40	11.91	11.90	68.9	38.88	-4.12	25.24	25.92
31.91	-14.92	0.41	11.84	11.81	68.91	39.80	-4.16	25.98	27.05
31.92	-15.29	0.42	11.77	11.73	68.92	40.72	-4.20	26.73	28.18
31.93	-15.65	0.44	11.70	11.64	68.93	41.65	-4.23	27.48	29.31
31.94	-16.02	0.45	11.63	11.56	68.94	42.57	-4.27	28.22	30.44
31.95	-16.38	0.47	11.56	11.48	68.95	43.49	-4.31	28.97	31.57
31.96	-16.74	0.48	11.48	11.39	68.96	44.26	-4.37	29.49	32.33
31.97	-17.11	0.50	11.41	11.31	68.97	45.07	-4.50	29.78	32.72
31.98	-17.47	0.51	11.35	11.23	68.98	46.14	-4.68	30.08	33.02
31.99	-17.84	0.52	11.28	11.14	68.99	47.23	-4.87	30.36	33.29
32	-18.20	0.54	11.21	11.06	69	48.16	-5.03	30.60	33.53
32.01	-18.01	0.53	11.26	11.12	69.01	48.18	-5.02	30.39	33.22
32.02	-17.42	0.51	11.35	11.23	69.02	45.92	-4.94	28.82	30.83
32.03	-17.09	0.50	11.42	11.31	69.03	45.37	-4.92	28.26	29.99
32.04	-16.77	0.48	11.48	11.39	69.04	44.27	-4.88	27.45	28.77
32.05	-16.37	0.47	11.56	11.48	69.05	43.26	-4.84	26.66	27.57
32.06	-16.01	0.45	11.63	11.56	69.06	42.34	-4.80	25.90	26.42
32.07	-15.66	0.44	11.70	11.64	69.07	41.36	-4.76	25.11	25.22
32.08	-15.29	0.42	11.77	11.73	69.08	40.40	-4.72	24.33	24.05
32.09	-14.92	0.41	11.84	11.81	69.09	39.44	-4.68	23.55	22.87
32.1	-14.56	0.40	11.91	11.90	69.1	38.48	-4.64	22.77	21.69
32.11	-14.20	0.38	11.98	11.98	69.11	37.52	-4.60	21.99	20.52
32.12	-13.83	0.37	12.05	12.06	69.12	36.56	-4.56	21.21	19.34
32.13	-13.47	0.36	12.12	12.14	69.13	35.59	-4.52	20.43	18.16
32.14	-13.10	0.34	12.19	12.22	69.14	34.63	-4.48	19.65	16.98
32.15	-12.74	0.33	12.26	12.30	69.15	33.67	-4.45	18.88	15.81
32.16	-12.38	0.32	12.32	12.38	69.16	32.71	-4.41	18.10	14.63
32.17	-12.01	0.30	12.39	12.45	69.17	31.75	-4.37	17.32	13.45
32.18	-11.65	0.29	12.45	12.52	69.18	30.78	-4.33	16.54	12.27
32.19	-11.28	0.28	12.51	12.58	69.19	29.82	-4.29	15.76	11.10
32.2	-10.92	0.27	12.56	12.63	69.2	28.86	-4.25	14.98	9.92
32.21	-10.56	0.26	12.61	12.68	69.21	27.90	-4.21	14.20	8.74
32.22	-10.19	0.25	12.66	12.72	69.22	26.94	-4.17	13.42	7.56
32.23	-9.83	0.25	12.70	12.77	69.23	25.97	-4.13	12.64	6.39
32.24	-9.46	0.24	12.75	12.81	69.24	25.01	-4.09	11.86	5.21
32.25	-9.10	0.23	12.80	12.86	69.25	24.05	-4.05	11.08	4.03
32.26	-8.74	0.22	12.85	12.90	69.26	23.09	-4.02	10.30	2.85
32.27	-8.37	0.21	12.90	12.95	69.27	22.13	-3.98	9.52	1.68
32.28	-8.01	0.20	12.94	13.00	69.28	21.16	-3.94	8.75	0.50

32.29	-7.64	0.19	12.99	13.04	69.29	20.27	-3.89	7.42	0.13
32.3	-7.28	0.18	13.04	13.09	69.3	19.26	-3.83	5.71	0.03
32.31	-6.92	0.17	13.09	13.13	69.31	18.26	-3.76	3.99	0.01
32.32	-6.55	0.16	13.14	13.18	69.32	17.32	-3.70	2.30	0.00
32.33	-6.19	0.15	13.18	13.22	69.33	16.36	-3.64	0.60	0.00
32.34	-5.82	0.15	13.23	13.27	69.34	15.72	-3.52	0.15	0.00
32.35	-5.46	0.14	13.28	13.32	69.35	14.76	-3.31	0.04	0.00
32.36	-5.10	0.13	13.33	13.36	69.36	13.51	-3.05	0.01	0.00
32.37	-4.73	0.12	13.38	13.41	69.37	12.40	-2.81	0.00	0.00
32.38	-4.37	0.11	13.42	13.45	69.38	11.46	-2.60	0.00	0.00
32.39	-4.00	0.10	13.47	13.50	69.39	10.59	-2.39	0.00	0.00
32.4	-3.64	0.09	13.52	13.54	69.4	9.66	-2.18	0.00	0.00
32.41	-3.28	0.08	13.57	13.59	69.41	8.68	-1.96	0.00	0.00
32.42	-2.91	0.07	13.62	13.63	69.42	7.69	-1.74	0.00	0.00
32.43	-2.55	0.06	13.66	13.68	69.43	6.72	-1.52	0.00	0.00
32.44	-2.18	0.05	13.71	13.73	69.44	5.77	-1.30	0.00	0.00
32.45	-1.82	0.05	13.76	13.77	69.45	4.81	-1.09	0.00	0.00
32.46	-1.46	0.04	13.81	13.82	69.46	3.85	-0.87	0.00	0.00
32.47	-1.09	0.03	13.86	13.86	69.47	2.89	-0.65	0.00	0.00
32.48	-0.73	0.02	13.90	13.91	69.48	1.92	-0.43	0.00	0.00
32.49	-0.36	0.01	13.95	13.95	69.49	0.96	-0.22	0.00	0.00
32.5	0.00	0.00	14.00	14.00	69.5	-0.03	0.00	0.00	0.00
32.51	0.36	-0.01	14.05	14.05	69.51	-0.93	0.21	0.00	0.00
32.52	0.73	-0.02	14.10	14.09	69.52	-1.88	0.43	0.00	0.00
32.53	1.09	-0.03	14.14	14.14	69.53	-2.91	0.65	0.00	0.00
32.54	1.46	-0.04	14.19	14.18	69.54	-3.87	0.87	0.00	0.00
32.55	1.82	-0.05	14.24	14.23	69.55	-4.82	1.09	0.00	0.00
32.56	2.18	-0.05	14.29	14.27	69.56	-5.77	1.30	0.00	0.00
32.57	2.55	-0.06	14.33	14.32	69.57	-6.73	1.52	0.00	0.00
32.58	2.91	-0.07	14.38	14.37	69.58	-7.70	1.74	0.00	0.00
32.59	3.28	-0.08	14.43	14.41	69.59	-8.66	1.96	0.00	0.00
32.6	3.64	-0.09	14.48	14.46	69.6	-9.62	2.18	0.00	0.00
32.61	4.00	-0.10	14.53	14.50	69.61	-10.58	2.39	0.00	0.00
32.62	4.37	-0.11	14.57	14.55	69.62	-11.54	2.61	0.00	0.00
32.63	4.73	-0.12	14.62	14.59	69.63	-12.51	2.83	0.00	0.00
32.64	5.10	-0.13	14.67	14.64	69.64	-14.01	3.02	0.00	0.00
32.65	5.46	-0.14	14.72	14.69	69.65	-14.61	3.07	0.00	0.00
32.66	5.82	-0.15	14.77	14.73	69.66	-15.15	3.11	0.00	0.00
32.67	6.19	-0.15	14.81	14.78	69.67	-16.43	3.18	0.00	0.00
32.68	6.55	-0.16	14.86	14.82	69.68	-17.38	3.24	0.00	0.00
32.69	6.92	-0.17	14.91	14.87	69.69	-18.32	3.28	0.00	0.00
32.7	7.28	-0.18	14.96	14.92	69.7	-19.23	3.32	0.00	0.00
32.71	7.64	-0.19	15.01	14.96	69.71	-20.21	3.36	0.00	0.00
32.72	8.01	-0.20	15.05	15.01	69.72	-21.16	3.40	0.00	0.00
32.73	8.37	-0.21	15.10	15.05	69.73	-22.13	3.44	0.00	0.00
32.74	8.74	-0.22	15.15	15.10	69.74	-23.09	3.48	0.00	0.00
32.75	9.10	-0.23	15.20	15.14	69.75	-24.05	3.52	0.00	0.00
32.76	9.46	-0.24	15.25	15.19	69.76	-25.01	3.56	0.00	0.00
32.77	9.83	-0.25	15.29	15.24	69.77	-25.97	3.60	0.00	0.00
32.78	10.19	-0.25	15.34	15.28	69.78	-26.94	3.64	0.00	0.00
32.79	10.56	-0.26	15.39	15.33	69.79	-27.90	3.68	0.00	0.00
32.8	10.92	-0.27	15.44	15.37	69.8	-28.86	3.72	0.00	0.00
32.81	11.28	-0.28	15.51	15.46	69.81	-29.82	3.75	0.00	0.00
32.82	11.64	-0.29	15.63	15.62	69.82	-30.78	3.79	0.00	0.00
32.83	12.01	-0.30	15.78	15.83	69.83	-31.75	3.83	0.00	0.00
32.84	12.37	-0.32	15.95	16.09	69.84	-32.71	3.87	0.00	0.00
32.85	12.74	-0.33	16.15	16.37	69.85	-33.67	3.91	0.00	0.00

32.86	13.10	-0.34	16.36	16.69	69.86	-34.63	3.95	0.00	0.00
32.87	13.47	-0.36	16.58	17.02	69.87	-35.59	3.99	0.00	0.00
32.88	13.83	-0.37	16.82	17.38	69.88	-36.56	4.03	0.00	0.00
32.89	14.20	-0.38	17.07	17.76	69.89	-37.52	4.07	0.00	0.00
32.9	14.56	-0.40	17.32	18.13	69.9	-38.48	4.11	0.00	0.00
32.91	14.92	-0.41	17.57	18.51	69.91	-39.44	4.14	0.00	0.00
32.92	15.29	-0.42	17.84	18.91	69.92	-40.40	4.18	0.00	0.00
32.93	15.65	-0.44	18.11	19.31	69.93	-41.37	4.22	0.00	0.00
32.94	16.02	-0.45	18.38	19.72	69.94	-42.33	4.26	0.00	0.00
32.95	16.38	-0.47	18.65	20.13	69.95	-43.29	4.30	0.00	0.00
32.96	16.74	-0.48	18.91	20.53	69.96	-44.15	4.36	0.00	0.00
32.97	17.11	-0.50	19.18	20.94	69.97	-44.93	4.48	0.00	0.00
32.98	17.47	-0.51	19.46	21.36	69.98	-46.01	4.66	0.00	0.00
32.99	17.84	-0.52	19.74	21.78	69.99	-47.18	4.86	0.00	0.00
33	18.20	-0.54	20.02	22.20	70	-48.18	5.03	0.00	0.00
33.01	18.01	-0.53	19.83	21.91	70.01	-48.23	5.03	0.00	0.00
33.02	17.42	-0.51	19.44	21.32	70.02	-45.91	4.94	0.00	0.00
33.03	17.09	-0.50	19.18	20.93	70.03	-45.05	4.91	0.00	0.00
33.04	16.77	-0.48	18.92	20.55	70.04	-44.44	4.88	0.00	0.00
33.05	16.37	-0.47	18.64	20.12	70.05	-43.23	4.84	0.00	0.00
33.06	16.01	-0.45	18.37	19.72	70.06	-42.32	4.80	0.00	0.00
33.07	15.66	-0.44	18.11	19.32	70.07	-41.38	4.76	0.00	0.00
33.08	15.29	-0.42	17.84	18.91	70.08	-40.40	4.72	0.00	0.00
33.09	14.92	-0.41	17.57	18.51	70.09	-39.44	4.68	0.00	0.00
33.1	14.56	-0.40	17.32	18.13	70.1	-38.48	4.64	0.00	0.00
33.11	14.20	-0.38	17.07	17.75	70.11	-37.52	4.60	0.00	0.00
33.12	13.83	-0.37	16.82	17.38	70.12	-36.56	4.56	0.00	0.00
33.13	13.47	-0.36	16.59	17.03	70.13	-35.59	4.52	0.00	0.00
33.14	13.10	-0.34	16.36	16.69	70.14	-34.63	4.49	0.00	0.00
33.15	12.74	-0.33	16.15	16.37	70.15	-33.67	4.45	0.00	0.00
33.16	12.38	-0.32	15.95	16.08	70.16	-32.71	4.41	0.00	0.00
33.17	12.01	-0.30	15.77	15.82	70.17	-31.75	4.37	0.00	0.00
33.18	11.65	-0.29	15.63	15.62	70.18	-30.78	4.33	0.00	0.00
33.19	11.28	-0.28	15.51	15.46	70.19	-29.82	4.29	0.00	0.00
33.2	10.92	-0.27	15.44	15.38	70.2	-28.86	4.25	0.00	0.00
33.21	10.56	-0.26	15.39	15.33	70.21	-27.90	4.21	0.00	0.00
33.22	10.19	-0.25	15.34	15.28	70.22	-26.94	4.17	0.00	0.00
33.23	9.83	-0.25	15.29	15.24	70.23	-25.97	4.13	0.00	0.00
33.24	9.46	-0.24	15.25	15.19	70.24	-25.01	4.10	0.00	0.00
33.25	9.10	-0.23	15.20	15.14	70.25	-24.05	4.06	0.00	0.00
33.26	8.74	-0.22	15.15	15.10	70.26	-23.09	4.02	0.00	0.00
33.27	8.37	-0.21	15.10	15.05	70.27	-22.13	3.98	0.00	0.00
33.28	8.01	-0.20	15.05	15.01	70.28	-21.16	3.94	0.00	0.00
33.29	7.64	-0.19	15.01	14.96	70.29	-20.27	3.89	0.00	0.00
33.3	7.28	-0.18	14.96	14.92	70.3	-19.26	3.83	0.00	0.00
33.31	6.92	-0.17	14.91	14.87	70.31	-18.26	3.77	0.00	0.00
33.32	6.55	-0.16	14.86	14.82	70.32	-17.32	3.71	0.00	0.00
33.33	6.19	-0.15	14.81	14.78	70.33	-16.36	3.64	0.00	0.00
33.34	5.82	-0.15	14.77	14.73	70.34	-15.72	3.52	0.00	0.00
33.35	5.46	-0.14	14.72	14.69	70.35	-14.76	3.31	0.00	0.00
33.36	5.10	-0.13	14.67	14.64	70.36	-13.51	3.05	0.00	0.00
33.37	4.73	-0.12	14.62	14.59	70.37	-12.40	2.81	0.00	0.00
33.38	4.37	-0.11	14.57	14.55	70.38	-11.46	2.60	0.00	0.00
33.39	4.00	-0.10	14.53	14.50	70.39	-10.59	2.39	0.00	0.00
33.4	3.64	-0.09	14.48	14.46	70.4	-9.66	2.18	0.00	0.00
33.41	3.28	-0.08	14.43	14.41	70.41	-8.68	1.96	0.00	0.00
33.42	2.91	-0.07	14.38	14.37	70.42	-7.69	1.74	0.00	0.00

33.43	2.55	-0.06	14.33	14.32	70.43	-6.72	1.52	0.00	0.00
33.44	2.18	-0.05	14.29	14.27	70.44	-5.77	1.30	0.00	0.00
33.45	1.82	-0.05	14.24	14.23	70.45	-4.81	1.09	0.00	0.00
33.46	1.46	-0.04	14.19	14.18	70.46	-3.85	0.87	0.00	0.00
33.47	1.09	-0.03	14.14	14.14	70.47	-2.89	0.65	0.00	0.00
33.48	0.73	-0.02	14.10	14.09	70.48	-1.92	0.43	0.00	0.00
33.49	0.36	-0.01	14.05	14.05	70.49	-0.96	0.22	0.00	0.00
33.5	0.00	0.00	14.00	14.00	70.5	0.03	0.00	0.00	0.00
33.51	-0.36	0.01	13.95	13.95	70.51	0.93	-0.21	0.00	0.00
33.52	-0.73	0.02	13.90	13.91	70.52	1.88	-0.43	0.00	0.00
33.53	-1.09	0.03	13.86	13.86	70.53	2.91	-0.65	0.00	0.00
33.54	-1.46	0.04	13.81	13.82	70.54	3.87	-0.87	0.00	0.00
33.55	-1.82	0.05	13.76	13.77	70.55	4.81	-1.09	0.00	0.00
33.56	-2.18	0.05	13.71	13.73	70.56	5.76	-1.30	0.00	0.00
33.57	-2.55	0.06	13.66	13.68	70.57	6.73	-1.52	0.00	0.00
33.58	-2.91	0.07	13.62	13.63	70.58	7.70	-1.74	0.00	0.00
33.59	-3.28	0.08	13.57	13.59	70.59	8.66	-1.96	0.00	0.00
33.6	-3.64	0.09	13.52	13.54	70.6	9.62	-2.18	0.00	0.00
33.61	-4.00	0.10	13.47	13.50	70.61	10.58	-2.39	0.00	0.00
33.62	-4.37	0.11	13.42	13.45	70.62	11.54	-2.61	0.00	0.00
33.63	-4.73	0.12	13.38	13.41	70.63	12.51	-2.83	0.00	0.00
33.64	-5.10	0.13	13.33	13.36	70.64	13.47	-3.05	0.00	0.00
33.65	-5.46	0.14	13.28	13.32	70.65	14.43	-3.26	0.00	0.00
33.66	-5.82	0.15	13.23	13.27	70.66	15.39	-3.48	0.00	0.00
33.67	-6.19	0.15	13.18	13.22	70.67	16.71	-3.64	1.36	0.00
33.68	-6.55	0.16	13.14	13.18	70.68	17.56	-3.71	2.66	0.00
33.69	-6.92	0.17	13.09	13.13	70.69	18.22	-3.76	3.97	0.00
33.7	-7.28	0.18	13.04	13.09	70.7	19.23	-3.82	5.71	0.00
33.71	-7.64	0.19	12.99	13.04	70.71	20.23	-3.89	7.47	0.00
33.72	-8.01	0.20	12.94	13.00	70.72	21.22	-3.94	8.65	0.72
33.73	-8.37	0.21	12.90	12.95	70.73	22.12	-3.98	9.52	1.69
33.74	-8.74	0.22	12.85	12.90	70.74	23.09	-4.02	10.30	2.86
33.75	-9.10	0.23	12.80	12.86	70.75	24.05	-4.05	11.08	4.03
33.76	-9.46	0.24	12.75	12.81	70.76	25.01	-4.09	11.86	5.21
33.77	-9.83	0.25	12.70	12.77	70.77	25.97	-4.13	12.64	6.39
33.78	-10.19	0.25	12.66	12.72	70.78	26.94	-4.17	13.42	7.56
33.79	-10.56	0.26	12.61	12.68	70.79	27.90	-4.21	14.20	8.74
33.8	-10.92	0.27	12.56	12.63	70.8	28.86	-4.25	14.98	9.92
33.81	-11.28	0.28	12.51	12.58	70.81	29.82	-4.29	15.76	11.10
33.82	-11.64	0.29	12.45	12.52	70.82	30.78	-4.33	16.54	12.27
33.83	-12.01	0.30	12.39	12.45	70.83	31.75	-4.37	17.32	13.45
33.84	-12.37	0.32	12.32	12.38	70.84	32.71	-4.41	18.10	14.63
33.85	-12.74	0.33	12.26	12.30	70.85	33.67	-4.45	18.88	15.81
33.86	-13.10	0.34	12.19	12.22	70.86	34.63	-4.48	19.65	16.98
33.87	-13.47	0.36	12.12	12.14	70.87	35.59	-4.52	20.43	18.16
33.88	-13.83	0.37	12.05	12.06	70.88	36.56	-4.56	21.21	19.34
33.89	-14.20	0.38	11.98	11.98	70.89	37.52	-4.60	21.99	20.52
33.9	-14.56	0.40	11.91	11.90	70.9	38.48	-4.64	22.77	21.70
33.91	-14.92	0.41	11.84	11.81	70.91	39.44	-4.68	23.55	22.87
33.92	-15.29	0.42	11.77	11.73	70.92	40.40	-4.72	24.33	24.05
33.93	-15.65	0.44	11.70	11.64	70.93	41.37	-4.76	25.11	25.23
33.94	-16.02	0.45	11.63	11.56	70.94	42.33	-4.80	25.89	26.41
33.95	-16.38	0.47	11.56	11.48	70.95	43.29	-4.84	26.67	27.58
33.96	-16.74	0.48	11.48	11.39	70.96	44.25	-4.87	27.45	28.76
33.97	-17.11	0.50	11.41	11.31	70.97	45.21	-4.91	28.23	29.94
33.98	-17.47	0.51	11.35	11.23	70.98	46.18	-4.95	29.01	31.12
33.99	-17.84	0.52	11.28	11.14	70.99	47.14	-4.99	29.79	32.29

34	-18.20	0.54	11.21	11.06	71	48.01	-5.05	30.44	33.25
34.01	-18.01	0.53	11.26	11.12	71.01	47.72	-5.03	30.04	32.66
34.02	-17.42	0.51	11.35	11.23	71.02	46.04	-4.97	28.86	30.86
34.03	-17.09	0.50	11.42	11.31	71.03	45.27	-4.93	28.18	29.84
34.04	-16.77	0.48	11.48	11.39	71.04	44.27	-4.89	27.39	28.65
34.05	-16.37	0.47	11.56	11.48	71.05	43.27	-4.85	26.60	27.45
34.06	-16.01	0.45	11.63	11.56	71.06	42.33	-4.81	25.83	26.29
34.07	-15.66	0.44	11.70	11.64	71.07	41.37	-4.77	25.05	25.11
34.08	-15.29	0.42	11.77	11.73	71.08	40.40	-4.74	24.27	23.93
34.09	-14.92	0.41	11.84	11.81	71.09	39.44	-4.70	23.49	22.75
34.1	-14.56	0.40	11.91	11.90	71.1	38.48	-4.66	22.71	21.57
34.11	-14.20	0.38	11.98	11.98	71.11	37.52	-4.62	21.93	20.40
34.12	-13.83	0.37	12.05	12.06	71.12	36.56	-4.58	21.15	19.22
34.13	-13.47	0.36	12.12	12.14	71.13	35.59	-4.54	20.37	18.04
34.14	-13.10	0.34	12.19	12.22	71.14	34.63	-4.50	19.59	16.86
34.15	-12.74	0.33	12.26	12.30	71.15	33.67	-4.46	18.81	15.69
34.16	-12.38	0.32	12.32	12.38	71.16	32.71	-4.42	18.03	14.51
34.17	-12.01	0.30	12.39	12.45	71.17	31.75	-4.38	17.25	13.33
34.18	-11.65	0.29	12.45	12.52	71.18	30.78	-4.34	16.47	12.15
34.19	-11.28	0.28	12.51	12.58	71.19	29.82	-4.31	15.69	10.97
34.2	-10.92	0.27	12.56	12.63	71.2	28.86	-4.27	14.91	9.80
34.21	-10.56	0.26	12.61	12.68	71.21	27.90	-4.23	14.14	8.62
34.22	-10.19	0.25	12.66	12.72	71.22	26.94	-4.19	13.36	7.44
34.23	-9.83	0.25	12.70	12.77	71.23	25.97	-4.15	12.58	6.26
34.24	-9.46	0.24	12.75	12.81	71.24	25.01	-4.11	11.80	5.09
34.25	-9.10	0.23	12.80	12.86	71.25	24.05	-4.07	11.02	3.91
34.26	-8.74	0.22	12.85	12.90	71.26	23.09	-4.03	10.24	2.73
34.27	-8.37	0.21	12.90	12.95	71.27	22.13	-3.99	9.46	1.56
34.28	-8.01	0.20	12.94	13.00	71.28	21.17	-3.95	8.68	0.39
34.29	-7.64	0.19	12.99	13.04	71.29	20.27	-3.90	7.29	0.10
34.3	-7.28	0.18	13.04	13.09	71.3	19.26	-3.84	5.55	0.02
34.31	-6.92	0.17	13.09	13.13	71.31	18.26	-3.78	3.83	0.01
34.32	-6.55	0.16	13.14	13.18	71.32	17.32	-3.72	2.14	0.00
34.33	-6.19	0.15	13.18	13.22	71.33	16.38	-3.65	0.54	0.00
34.34	-5.82	0.15	13.23	13.27	71.34	15.72	-3.53	0.13	0.00
34.35	-5.46	0.14	13.28	13.32	71.35	14.67	-3.30	0.01	0.00
34.36	-5.10	0.13	13.33	13.36	71.36	13.43	-3.04	0.00	0.00
34.37	-4.73	0.12	13.38	13.41	71.37	12.33	-2.80	0.00	0.00
34.38	-4.37	0.11	13.42	13.45	71.38	11.45	-2.59	0.00	0.00
34.39	-4.00	0.10	13.47	13.50	71.39	10.61	-2.40	0.00	0.00
34.4	-3.64	0.09	13.52	13.54	71.4	9.68	-2.18	0.00	0.00
34.41	-3.28	0.08	13.57	13.59	71.41	8.68	-1.96	0.00	0.00
34.42	-2.91	0.07	13.62	13.63	71.42	7.68	-1.74	0.00	0.00
34.43	-2.55	0.06	13.66	13.68	71.43	6.72	-1.52	0.00	0.00
34.44	-2.18	0.05	13.71	13.73	71.44	5.77	-1.30	0.00	0.00
34.45	-1.82	0.05	13.76	13.77	71.45	4.82	-1.09	0.00	0.00
34.46	-1.46	0.04	13.81	13.82	71.46	3.85	-0.87	0.00	0.00
34.47	-1.09	0.03	13.86	13.86	71.47	2.89	-0.65	0.00	0.00
34.48	-0.73	0.02	13.90	13.91	71.48	1.92	-0.43	0.00	0.00
34.49	-0.36	0.01	13.95	13.95	71.49	0.96	-0.22	0.00	0.00
34.5	0.00	0.00	14.00	14.00	71.5	0.00	0.00	0.00	0.00
34.51	0.36	-0.01	14.05	14.05	71.51	-0.87	0.21	0.00	0.00
34.52	0.73	-0.02	14.10	14.09	71.52	-1.89	0.43	0.00	0.00
34.53	1.09	-0.03	14.14	14.14	71.53	-2.93	0.66	0.00	0.00
34.54	1.46	-0.04	14.19	14.18	71.54	-3.86	0.87	0.00	0.00
34.55	1.82	-0.05	14.24	14.23	71.55	-4.81	1.09	0.00	0.00
34.56	2.18	-0.05	14.29	14.27	71.56	-5.76	1.30	0.00	0.00

34.57	2.55	-0.06	14.33	14.32	71.57	-6.73	1.52	0.00	0.00
34.58	2.91	-0.07	14.38	14.37	71.58	-7.70	1.74	0.00	0.00
34.59	3.28	-0.08	14.43	14.41	71.59	-8.66	1.96	0.00	0.00
34.6	3.64	-0.09	14.48	14.46	71.6	-9.62	2.18	0.00	0.00
34.61	4.00	-0.10	14.53	14.50	71.61	-10.58	2.39	0.00	0.00
34.62	4.37	-0.11	14.57	14.55	71.62	-11.54	2.61	0.00	0.00
34.63	4.73	-0.12	14.62	14.59	71.63	-12.51	2.83	0.00	0.00
34.64	5.10	-0.13	14.67	14.64	71.64	-13.47	3.05	0.00	0.00
34.65	5.46	-0.14	14.72	14.69	71.65	-14.43	3.26	0.00	0.00
34.66	5.82	-0.15	14.77	14.73	71.66	-15.39	3.48	0.00	0.00
34.67	6.19	-0.15	14.81	14.78	71.67	-16.91	3.67	0.00	0.00
34.68	6.55	-0.16	14.86	14.82	71.68	-17.48	3.71	0.00	0.00
34.69	6.92	-0.17	14.91	14.87	71.69	-18.04	3.76	0.00	0.00
34.7	7.28	-0.18	14.96	14.92	71.7	-19.32	3.83	0.00	0.00
34.71	7.64	-0.19	15.01	14.96	71.71	-20.26	3.89	0.00	0.00
34.72	8.01	-0.20	15.05	15.01	71.72	-21.19	3.94	0.00	0.00
34.73	8.37	-0.21	15.10	15.05	71.73	-22.15	3.98	0.00	0.00
34.74	8.74	-0.22	15.15	15.10	71.74	-23.09	4.02	0.00	0.00
34.75	9.10	-0.23	15.20	15.14	71.75	-24.05	4.06	0.00	0.00
34.76	9.46	-0.24	15.25	15.19	71.76	-25.01	4.10	0.00	0.00
34.77	9.83	-0.25	15.29	15.24	71.77	-25.97	4.13	0.00	0.00
34.78	10.19	-0.25	15.34	15.28	71.78	-26.94	4.17	0.00	0.00
34.79	10.56	-0.26	15.39	15.33	71.79	-27.90	4.21	0.00	0.00
34.8	10.92	-0.27	15.44	15.37	71.8	-28.86	4.25	0.00	0.00
34.81	11.28	-0.28	15.51	15.46	71.81	-29.82	4.29	0.00	0.00
34.82	11.64	-0.29	15.63	15.62	71.82	-30.78	4.33	0.00	0.00
34.83	12.01	-0.30	15.78	15.83	71.83	-31.75	4.37	0.00	0.00
34.84	12.37	-0.32	15.95	16.09	71.84	-32.71	4.41	0.00	0.00
34.85	12.74	-0.33	16.15	16.37	71.85	-33.67	4.45	0.00	0.00
34.86	13.10	-0.34	16.36	16.69	71.86	-34.63	4.49	0.00	0.00
34.87	13.47	-0.36	16.58	17.02	71.87	-35.59	4.52	0.00	0.00
34.88	13.83	-0.37	16.82	17.38	71.88	-36.56	4.56	0.00	0.00
34.89	14.20	-0.38	17.07	17.76	71.89	-37.52	4.60	0.00	0.00
34.9	14.56	-0.40	17.32	18.13	71.9	-38.48	4.64	0.00	0.00
34.91	14.92	-0.41	17.57	18.51	71.91	-39.44	4.68	0.00	0.00
34.92	15.29	-0.42	17.84	18.91	71.92	-40.40	4.72	0.00	0.00
34.93	15.65	-0.44	18.11	19.31	71.93	-41.37	4.76	0.00	0.00
34.94	16.02	-0.45	18.38	19.72	71.94	-42.33	4.80	0.00	0.00
34.95	16.38	-0.47	18.65	20.13	71.95	-43.29	4.84	0.00	0.00
34.96	16.74	-0.48	18.91	20.53	71.96	-44.25	4.88	0.00	0.00
34.97	17.11	-0.50	19.18	20.94	71.97	-45.21	4.92	0.00	0.00
34.98	17.47	-0.51	19.46	21.36	71.98	-46.18	4.95	0.00	0.00
34.99	17.84	-0.52	19.74	21.78	71.99	-47.14	4.99	0.00	0.00
35	18.20	-0.54	20.02	22.20	72	-48.01	5.05	0.00	0.00
35.01	18.01	-0.53	19.83	21.91	72.01	-48.08	5.04	0.00	0.00
35.02	17.42	-0.51	19.44	21.32	72.02	-47.04	5.01	0.00	0.00
35.03	17.09	-0.50	19.18	20.93	72.03	-46.70	4.99	0.00	0.00
35.04	16.77	-0.48	18.92	20.55	72.04	-46.19	4.97	0.00	0.00
35.05	16.37	-0.47	18.64	20.12	72.05	-45.68	4.95	0.00	0.00
35.06	16.01	-0.45	18.37	19.72	72.06	-45.22	4.93	0.00	0.00
35.07	15.66	-0.44	18.11	19.32	72.07	-44.74	4.91	0.00	0.00
35.08	15.29	-0.42	17.84	18.91	72.08	-44.25	4.89	0.00	0.00
35.09	14.92	-0.41	17.57	18.51	72.09	-43.77	4.87	0.00	0.00
35.1	14.56	-0.40	17.32	18.13	72.1	-43.29	4.85	0.00	0.00
35.11	14.20	-0.38	17.07	17.75	72.11	-42.81	4.83	0.00	0.00
35.12	13.83	-0.37	16.82	17.38	72.12	-42.33	4.81	0.00	0.00
35.13	13.47	-0.36	16.59	17.03	72.13	-41.85	4.79	0.00	0.00

35.14	13.10	-0.34	16.36	16.69	72.14	-41.37	4.78	0.00	0.00
35.15	12.74	-0.33	16.15	16.37	72.15	-40.89	4.76	0.00	0.00
35.16	12.38	-0.32	15.95	16.08	72.16	-40.40	4.74	0.00	0.00
35.17	12.01	-0.30	15.77	15.82	72.17	-39.92	4.72	0.00	0.00
35.18	11.65	-0.29	15.63	15.62	72.18	-39.44	4.70	0.00	0.00
35.19	11.28	-0.28	15.51	15.46	72.19	-38.96	4.68	0.00	0.00
35.2	10.92	-0.27	15.44	15.38	72.2	-38.48	4.66	0.00	0.00
35.21	10.56	-0.26	15.39	15.33	72.21	-38.00	4.64	0.00	0.00
35.22	10.19	-0.25	15.34	15.28	72.22	-37.52	4.62	0.00	0.00
35.23	9.83	-0.25	15.29	15.24	72.23	-37.04	4.60	0.00	0.00
35.24	9.46	-0.24	15.25	15.19	72.24	-36.56	4.58	0.00	0.00
35.25	9.10	-0.23	15.20	15.14	72.25	-36.08	4.56	0.00	0.00
35.26	8.74	-0.22	15.15	15.10	72.26	-35.59	4.54	0.00	0.00
35.27	8.37	-0.21	15.10	15.05	72.27	-35.11	4.52	0.00	0.00
35.28	8.01	-0.20	15.05	15.01	72.28	-34.63	4.50	0.00	0.00
35.29	7.64	-0.19	15.01	14.96	72.29	-34.15	4.48	0.00	0.00
35.3	7.28	-0.18	14.96	14.92	72.3	-33.67	4.46	0.00	0.00
35.31	6.92	-0.17	14.91	14.87	72.31	-33.19	4.44	0.00	0.00
35.32	6.55	-0.16	14.86	14.82	72.32	-32.71	4.42	0.00	0.00
35.33	6.19	-0.15	14.81	14.78	72.33	-32.23	4.40	0.00	0.00
35.34	5.82	-0.15	14.77	14.73	72.34	-31.75	4.38	0.00	0.00
35.35	5.46	-0.14	14.72	14.69	72.35	-31.27	4.37	0.00	0.00
35.36	5.10	-0.13	14.67	14.64	72.36	-30.78	4.35	0.00	0.00
35.37	4.73	-0.12	14.62	14.59	72.37	-30.30	4.33	0.00	0.00
35.38	4.37	-0.11	14.57	14.55	72.38	-29.82	4.31	0.00	0.00
35.39	4.00	-0.10	14.53	14.50	72.39	-29.34	4.29	0.00	0.00
35.4	3.64	-0.09	14.48	14.46	72.4	-28.86	4.27	0.00	0.00
35.41	3.28	-0.08	14.43	14.41	72.41	-28.38	4.25	0.00	0.00
35.42	2.91	-0.07	14.38	14.37	72.42	-27.90	4.23	0.00	0.00
35.43	2.55	-0.06	14.33	14.32	72.43	-27.42	4.21	0.00	0.00
35.44	2.18	-0.05	14.29	14.27	72.44	-26.94	4.19	0.00	0.00
35.45	1.82	-0.05	14.24	14.23	72.45	-26.46	4.17	0.00	0.00
35.46	1.46	-0.04	14.19	14.18	72.46	-25.97	4.15	0.00	0.00
35.47	1.09	-0.03	14.14	14.14	72.47	-25.49	4.13	0.00	0.00
35.48	0.73	-0.02	14.10	14.09	72.48	-25.01	4.11	0.00	0.00
35.49	0.36	-0.01	14.05	14.05	72.49	-24.53	4.09	0.00	0.00
35.5	0.00	0.00	14.00	14.00	72.5	-24.05	4.07	0.00	0.00
35.51	-0.36	0.01	13.95	13.95	72.51	-23.57	4.05	0.00	0.00
35.52	-0.73	0.02	13.90	13.91	72.52	-23.09	4.03	0.00	0.00
35.53	-1.09	0.03	13.86	13.86	72.53	-22.61	4.01	0.00	0.00
35.54	-1.46	0.04	13.81	13.82	72.54	-22.13	3.99	0.00	0.00
35.55	-1.82	0.05	13.76	13.77	72.55	-21.65	3.97	0.00	0.00
35.56	-2.18	0.05	13.71	13.73	72.56	-21.16	3.95	0.00	0.00
35.57	-2.55	0.06	13.66	13.68	72.57	-20.71	3.93	0.00	0.00
35.58	-2.91	0.07	13.62	13.63	72.58	-20.22	3.90	0.00	0.00
35.59	-3.28	0.08	13.57	13.59	72.59	-19.72	3.87	0.00	0.00
35.6	-3.64	0.09	13.52	13.54	72.6	-19.24	3.84	0.00	0.00
35.61	-4.00	0.10	13.47	13.50	72.61	-18.76	3.81	0.00	0.00
35.62	-4.37	0.11	13.42	13.45	72.62	-18.28	3.78	0.00	0.00
35.63	-4.73	0.12	13.38	13.41	72.63	-17.80	3.75	0.00	0.00
35.64	-5.10	0.13	13.33	13.36	72.64	-17.32	3.72	0.00	0.00
35.65	-5.46	0.14	13.28	13.32	72.65	-16.84	3.69	0.00	0.00
35.66	-5.82	0.15	13.23	13.27	72.66	-16.36	3.66	0.00	0.00
35.67	-6.19	0.15	13.18	13.22	72.67	-16.01	3.60	0.00	0.00
35.68	-6.55	0.16	13.14	13.18	72.68	-15.56	3.50	0.00	0.00
35.69	-6.92	0.17	13.09	13.13	72.69	-14.96	3.38	0.00	0.00
35.7	-7.28	0.18	13.04	13.09	72.7	-14.39	3.26	0.00	0.00

35.71	-7.64	0.19	12.99	13.04
35.72	-8.01	0.20	12.94	13.00
35.73	-8.37	0.21	12.90	12.95
35.74	-8.74	0.22	12.85	12.90
35.75	-9.10	0.23	12.80	12.86
35.76	-9.46	0.24	12.75	12.81
35.77	-9.83	0.25	12.70	12.77
35.78	-10.19	0.25	12.66	12.72
35.79	-10.56	0.26	12.61	12.68
35.8	-10.92	0.27	12.56	12.63
35.81	-11.28	0.28	12.51	12.58
35.82	-11.64	0.29	12.45	12.52
35.83	-12.01	0.30	12.39	12.45
35.84	-12.37	0.32	12.32	12.38
35.85	-12.74	0.33	12.26	12.30
35.86	-13.10	0.34	12.19	12.22
35.87	-13.47	0.36	12.12	12.14
35.88	-13.83	0.37	12.05	12.06
35.89	-14.20	0.38	11.98	11.98
35.9	-14.56	0.40	11.91	11.90
35.91	-14.92	0.41	11.84	11.81
35.92	-15.29	0.42	11.77	11.73
35.93	-15.65	0.44	11.70	11.64
35.94	-16.02	0.45	11.63	11.56
35.95	-16.38	0.47	11.56	11.48
35.96	-16.74	0.48	11.48	11.39
35.97	-17.11	0.50	11.41	11.31
35.98	-17.47	0.51	11.35	11.23
35.99	-17.84	0.52	11.28	11.14
36	-18.20	0.54	11.21	11.06
36.01	-17.97	0.53	11.26	11.13
36.02	-17.33	0.50	11.37	11.25
36.03	-16.96	0.49	11.44	11.34
36.04	-16.59	0.47	11.52	11.43
36.05	-16.15	0.46	11.60	11.53
36.06	-15.74	0.44	11.68	11.62
36.07	-15.34	0.43	11.76	11.72
36.08	-14.93	0.41	11.84	11.81
36.09	-14.52	0.40	11.92	11.90
36.1	-14.11	0.38	11.99	12.00
36.11	-13.70	0.36	12.07	12.09
36.12	-13.29	0.35	12.15	12.18
36.13	-12.88	0.33	12.23	12.27
36.14	-12.47	0.32	12.31	12.36
36.15	-12.06	0.31	12.38	12.44
36.16	-11.65	0.29	12.45	12.52
36.17	-11.24	0.28	12.51	12.58
36.18	-10.83	0.27	12.57	12.64
36.19	-10.43	0.26	12.63	12.69
36.2	-10.02	0.25	12.68	12.74
36.21	-9.61	0.24	12.73	12.79
36.22	-9.20	0.23	12.79	12.85
36.23	-8.79	0.22	12.84	12.90
36.24	-8.38	0.21	12.89	12.95
36.25	-7.98	0.20	12.95	13.00
36.26	-7.57	0.19	13.00	13.05
36.27	-7.16	0.18	13.06	13.10

72.71	-13.90	3.15	0.00	0.00
72.72	-13.46	3.04	0.00	0.00
72.73	-13.01	2.94	0.00	0.00
72.74	-12.52	2.83	0.00	0.00
72.75	-12.02	2.72	0.00	0.00
72.76	-11.54	2.61	0.00	0.00
72.77	-11.06	2.50	0.00	0.00
72.78	-10.58	2.39	0.00	0.00
72.79	-10.10	2.28	0.00	0.00
72.8	-9.62	2.18	0.00	0.00
72.81	-9.14	2.07	0.00	0.00
72.82	-8.66	1.96	0.00	0.00
72.83	-8.18	1.85	0.00	0.00
72.84	-7.70	1.74	0.00	0.00
72.85	-7.22	1.63	0.00	0.00
72.86	-6.73	1.52	0.00	0.00
72.87	-6.25	1.41	0.00	0.00
72.88	-5.77	1.31	0.00	0.00
72.89	-5.29	1.20	0.00	0.00
72.9	-4.81	1.09	0.00	0.00
72.91	-4.33	0.98	0.00	0.00
72.92	-3.85	0.87	0.00	0.00
72.93	-3.37	0.76	0.00	0.00
72.94	-2.89	0.65	0.00	0.00
72.95	-2.41	0.54	0.00	0.00
72.96	-1.92	0.44	0.00	0.00
72.97	-1.44	0.33	0.00	0.00
72.98	-0.96	0.22	0.00	0.00
72.99	-0.48	0.11	0.00	0.00
73	0.01	0.00	0.00	0.00

36.28	-6.75	0.17	13.11	13.15
36.29	-6.34	0.16	13.16	13.20
36.3	-5.93	0.15	13.22	13.26
36.31	-5.52	0.14	13.27	13.31
36.32	-5.11	0.13	13.33	13.36
36.33	-4.70	0.12	13.38	13.41
36.34	-4.29	0.11	13.43	13.46
36.35	-3.89	0.10	13.49	13.51
36.36	-3.48	0.09	13.54	13.56
36.37	-3.07	0.08	13.60	13.62
36.38	-2.66	0.07	13.65	13.67
36.39	-2.25	0.06	13.70	13.72
36.4	-1.84	0.05	13.76	13.77
36.41	-1.43	0.04	13.81	13.82
36.42	-1.02	0.03	13.86	13.87
36.43	-0.61	0.02	13.92	13.92
36.44	-0.20	0.01	13.97	13.97
36.45	0.21	-0.01	14.03	14.03
36.46	0.61	-0.02	14.08	14.08
36.47	1.02	-0.03	14.13	14.13
36.48	1.43	-0.04	14.19	14.18
36.49	1.84	-0.05	14.24	14.23
36.5	2.25	-0.06	14.30	14.28
36.51	2.66	-0.07	14.35	14.33
36.52	3.07	-0.08	14.40	14.39
36.53	3.48	-0.09	14.46	14.44
36.54	3.89	-0.10	14.51	14.49
36.55	4.30	-0.11	14.57	14.54
36.56	4.70	-0.12	14.62	14.59
36.57	5.11	-0.13	14.67	14.64
36.58	5.52	-0.14	14.73	14.69
36.59	5.93	-0.15	14.78	14.75
36.6	6.34	-0.16	14.83	14.80
36.61	6.75	-0.17	14.89	14.85
36.62	7.16	-0.18	14.94	14.90
36.63	7.57	-0.19	15.00	14.95
36.64	7.98	-0.20	15.05	15.00
36.65	8.39	-0.21	15.10	15.05
36.66	8.79	-0.22	15.16	15.11
36.67	9.20	-0.23	15.21	15.16
36.68	9.61	-0.24	15.27	15.21
36.69	10.02	-0.25	15.32	15.26
36.7	10.43	-0.26	15.37	15.31
36.71	10.84	-0.27	15.43	15.36
36.72	11.25	-0.28	15.50	15.45
36.73	11.65	-0.29	15.63	15.62
36.74	12.06	-0.31	15.80	15.86
36.75	12.47	-0.32	16.00	16.16
36.76	12.88	-0.33	16.23	16.50
36.77	13.29	-0.35	16.48	16.87
36.78	13.70	-0.36	16.74	17.26
36.79	14.11	-0.38	17.01	17.67
36.8	14.52	-0.40	17.29	18.09
36.81	14.93	-0.41	17.58	18.52
36.82	15.34	-0.43	17.87	18.96
36.83	15.75	-0.44	18.18	19.42
36.84	16.16	-0.46	18.48	19.88

36.85	16.57	-0.47	18.78	20.33
36.86	16.97	-0.49	19.08	20.79
36.87	17.38	-0.51	19.39	21.26
36.88	17.79	-0.52	19.71	21.73
36.89	18.20	-0.54	20.02	22.20
36.9	18.61	-0.55	20.34	22.68
36.91	19.02	-0.57	20.65	23.15
36.92	19.43	-0.59	20.96	23.63
36.93	19.84	-0.60	21.28	24.10
36.94	20.25	-0.62	21.59	24.58
36.95	20.66	-0.64	21.91	25.06
36.96	21.06	-0.65	22.23	25.54
36.97	21.47	-0.67	22.55	26.03
36.98	21.88	-0.68	22.87	26.51
36.99	22.29	-0.70	23.19	27.00

APPENDIX G

DETERMINATION OF MOMENT IN WEB CONNECTION

The moments below are calculated from the values obtained from each step of the SAP2000 finite element analysis model. These moments are calculated per the procedure discussed in Section 7.1.

Time	Rotation	Moment Due to Vertical Load in Upper Bolts	Moment Due to Vertical Load in Lower Bolts	Moment Due to Horizontal Load in Upper Bolts	Moment Due to Horizontal Load in Lower Bolts	Moment Due to Bolts
seconds	*radians*	*k-ft*	*k-ft*	*k-ft*	*k-ft*	*k-ft*
0.00	0.0000	-0.16	0.16	0.00	0.00	0.00
0.01	0.0000	-0.15	0.16	0.00	0.00	0.00
0.02	-0.0001	-0.15	0.16	0.00	0.00	0.01
0.03	-0.0001	-0.16	0.17	0.00	0.00	0.01
0.04	-0.0001	-0.17	0.19	0.00	0.00	0.02
0.05	-0.0002	-0.18	0.21	0.00	0.00	0.02
0.06	-0.0002	-0.19	0.22	0.00	0.00	0.03
0.07	-0.0003	-0.20	0.24	0.00	0.00	0.04
0.08	-0.0003	-0.21	0.26	0.00	0.00	0.04
0.09	-0.0003	-0.22	0.27	0.00	0.00	0.05
0.10	-0.0004	-0.24	0.29	0.00	0.00	0.05
0.11	-0.0004	-0.25	0.30	0.00	0.00	0.06
0.12	-0.0004	-0.27	0.33	0.00	0.00	0.06
0.13	-0.0005	-0.29	0.36	0.00	0.00	0.07
0.14	-0.0005	-0.31	0.39	0.00	0.00	0.07
0.15	-0.0006	-0.34	0.42	0.00	0.00	0.08
0.16	-0.0006	-0.36	0.44	0.00	0.00	0.08
0.17	-0.0006	-0.38	0.47	0.00	0.00	0.09
0.18	-0.0007	-0.40	0.50	0.00	0.00	0.09
0.19	-0.0007	-0.43	0.53	0.00	0.00	0.10
0.20	-0.0007	-0.45	0.55	0.00	0.00	0.10
0.21	-0.0008	-0.47	0.58	0.00	0.00	0.11
0.22	-0.0008	-0.49	0.61	0.00	0.00	0.11
0.23	-0.0009	-0.52	0.64	0.00	0.00	0.12
0.24	-0.0009	-0.54	0.67	0.00	0.00	0.13
0.25	-0.0009	-0.56	0.69	0.00	0.00	0.13
0.26	-0.0010	-0.58	0.72	0.00	0.00	0.14
0.27	-0.0010	-0.61	0.75	0.00	0.00	0.14
0.28	-0.0010	-0.63	0.78	0.00	0.00	0.15
0.29	-0.0011	-0.65	0.80	0.00	0.00	0.15
0.30	-0.0011	-0.67	0.83	0.00	0.00	0.16
0.31	-0.0012	-0.70	0.86	0.00	0.00	0.16

0.32	-0.0012	-0.72	0.89	0.00	0.00	0.17
0.33	-0.0012	-0.74	0.92	0.00	0.00	0.17
0.34	-0.0013	-0.76	0.94	0.00	0.00	0.18
0.35	-0.0013	-0.79	0.97	0.00	0.00	0.18
0.36	-0.0013	-0.81	1.00	0.00	0.00	0.19
0.37	-0.0014	-0.83	1.03	0.00	0.00	0.19
0.38	-0.0014	-0.86	1.05	0.00	0.00	0.20
0.39	-0.0015	-0.88	1.08	0.00	0.00	0.20
0.40	-0.0015	-0.90	1.11	0.00	0.00	0.21
0.41	-0.0015	-0.92	1.14	0.00	0.00	0.21
0.42	-0.0016	-0.95	1.17	0.00	0.00	0.22
0.43	-0.0016	-0.97	1.19	0.00	0.00	0.22
0.44	-0.0016	-0.99	1.22	0.00	0.00	0.23
0.45	-0.0017	-1.01	1.25	0.00	0.00	0.23
0.46	-0.0017	-1.04	1.28	0.00	0.00	0.24
0.47	-0.0018	-1.06	1.30	0.00	0.00	0.24
0.48	-0.0018	-1.08	1.33	0.00	0.00	0.25
0.49	-0.0018	-1.10	1.36	0.00	0.00	0.25
0.50	-0.0019	-1.13	1.39	0.00	0.00	0.26
0.51	-0.0019	-1.15	1.42	0.00	0.00	0.26
0.52	-0.0019	-1.17	1.44	0.00	0.00	0.27
0.53	-0.0020	-1.19	1.47	0.00	0.00	0.27
0.54	-0.0020	-1.22	1.50	0.00	0.00	0.28
0.55	-0.0021	-1.24	1.53	0.00	0.00	0.28
0.56	-0.0021	-1.26	1.55	0.00	0.00	0.29
0.57	-0.0021	-1.28	1.58	0.00	0.00	0.30
0.58	-0.0022	-1.31	1.61	0.00	0.00	0.30
0.59	-0.0022	-1.33	1.64	0.00	0.00	0.31
0.60	-0.0022	-1.35	1.67	0.00	0.00	0.31
0.61	-0.0023	-1.37	1.69	0.00	0.00	0.32
0.62	-0.0023	-1.40	1.72	0.00	0.00	0.32
0.63	-0.0024	-1.42	1.75	0.00	0.00	0.33
0.64	-0.0024	-1.44	1.78	0.00	0.00	0.33
0.65	-0.0024	-1.46	1.80	0.00	0.00	0.34
0.66	-0.0025	-1.49	1.83	0.00	0.00	0.34
0.67	-0.0025	-1.51	1.86	0.00	0.00	0.35
0.68	-0.0025	-1.53	1.89	0.00	0.00	0.35
0.69	-0.0026	-1.55	1.92	0.00	0.00	0.36
0.70	-0.0026	-1.58	1.94	0.00	0.00	0.36
0.71	-0.0027	-1.60	1.97	0.00	0.00	0.37
0.72	-0.0027	-1.62	2.00	0.00	0.00	0.37
0.73	-0.0027	-1.64	2.03	0.00	0.00	0.38
0.74	-0.0028	-1.67	2.05	0.00	0.00	0.38
0.75	-0.0028	-1.69	2.08	0.00	0.00	0.39
0.76	-0.0028	-1.71	2.11	0.00	0.00	0.39
0.77	-0.0029	-1.73	2.14	0.00	0.00	0.40
0.78	-0.0029	-1.76	2.16	0.00	0.00	0.40
0.79	-0.0030	-1.78	2.19	0.00	0.00	0.41
0.80	-0.0030	-1.80	2.22	0.00	0.00	0.41
0.81	-0.0030	-1.82	2.25	0.00	0.00	0.42
0.82	-0.0031	-1.85	2.28	0.00	0.00	0.42
0.83	-0.0031	-1.87	2.30	0.00	0.00	0.43
0.84	-0.0031	-1.89	2.33	0.00	0.00	0.43
0.85	-0.0032	-1.91	2.36	0.00	0.00	0.44
0.86	-0.0032	-1.94	2.39	0.00	0.00	0.44
0.87	-0.0033	-1.96	2.42	0.00	0.00	0.45
0.88	-0.0033	-1.98	2.44	0.00	0.00	0.46

0.89	-0.0033	-2.00	2.47	0.00	0.00	0.46
0.90	-0.0034	-2.03	2.50	0.00	0.00	0.47
0.91	-0.0034	-2.05	2.53	0.00	0.00	0.47
0.92	-0.0034	-2.07	2.55	0.00	0.00	0.47
0.93	-0.0035	-2.10	2.58	0.00	0.00	0.48
0.94	-0.0035	-2.12	2.61	0.00	0.00	0.49
0.95	-0.0036	-2.14	2.64	0.00	0.00	0.49
0.96	-0.0036	-2.16	2.66	0.00	0.00	0.50
0.97	-0.0036	-2.18	2.69	0.00	0.00	0.50
0.98	-0.0037	-2.21	2.72	0.00	0.00	0.51
0.99	-0.0037	-2.23	2.75	0.00	0.00	0.51
1.00	-0.0037	-2.25	2.78	0.00	0.00	0.52
1.01	-0.0037	-2.22	2.73	0.00	0.00	0.51
1.02	-0.0036	-2.16	2.66	0.00	0.00	0.50
1.03	-0.0035	-2.12	2.61	0.00	0.00	0.49
1.04	-0.0034	-2.07	2.55	0.00	0.00	0.48
1.05	-0.0034	-2.03	2.50	0.00	0.00	0.47
1.06	-0.0033	-1.98	2.44	0.00	0.00	0.46
1.07	-0.0032	-1.94	2.39	0.00	0.00	0.45
1.08	-0.0031	-1.89	2.33	0.00	0.00	0.43
1.09	-0.0031	-1.85	2.28	0.00	0.00	0.42
1.10	-0.0030	-1.80	2.22	0.00	0.00	0.41
1.11	-0.0029	-1.76	2.16	0.00	0.00	0.40
1.12	-0.0028	-1.71	2.11	0.00	0.00	0.39
1.13	-0.0028	-1.67	2.05	0.00	0.00	0.38
1.14	-0.0027	-1.62	2.00	0.00	0.00	0.37
1.15	-0.0026	-1.58	1.94	0.00	0.00	0.36
1.16	-0.0025	-1.53	1.89	0.00	0.00	0.35
1.17	-0.0025	-1.49	1.83	0.00	0.00	0.34
1.18	-0.0024	-1.44	1.78	0.00	0.00	0.33
1.19	-0.0023	-1.40	1.72	0.00	0.00	0.32
1.20	-0.0022	-1.35	1.67	0.00	0.00	0.31
1.21	-0.0022	-1.31	1.61	0.00	0.00	0.30
1.22	-0.0021	-1.26	1.55	0.00	0.00	0.29
1.23	-0.0020	-1.22	1.50	0.00	0.00	0.28
1.24	-0.0019	-1.17	1.44	0.00	0.00	0.27
1.25	-0.0019	-1.13	1.39	0.00	0.00	0.26
1.26	-0.0018	-1.08	1.33	0.00	0.00	0.25
1.27	-0.0017	-1.04	1.28	0.00	0.00	0.24
1.28	-0.0016	-0.99	1.22	0.00	0.00	0.23
1.29	-0.0016	-0.95	1.17	0.00	0.00	0.22
1.30	-0.0015	-0.90	1.11	0.00	0.00	0.21
1.31	-0.0014	-0.86	1.05	0.00	0.00	0.20
1.32	-0.0013	-0.81	1.00	0.00	0.00	0.19
1.33	-0.0013	-0.76	0.94	0.00	0.00	0.18
1.34	-0.0012	-0.72	0.89	0.00	0.00	0.17
1.35	-0.0011	-0.67	0.83	0.00	0.00	0.16
1.36	-0.0010	-0.63	0.78	0.00	0.00	0.15
1.37	-0.0010	-0.58	0.72	0.00	0.00	0.14
1.38	-0.0009	-0.54	0.67	0.00	0.00	0.13
1.39	-0.0008	-0.49	0.61	0.00	0.00	0.11
1.40	-0.0007	-0.45	0.55	0.00	0.00	0.11
1.41	-0.0007	-0.40	0.50	0.00	0.00	0.09
1.42	-0.0006	-0.36	0.44	0.00	0.00	0.08
1.43	-0.0005	-0.31	0.39	0.00	0.00	0.07
1.44	-0.0004	-0.27	0.33	0.00	0.00	0.06
1.45	-0.0004	-0.24	0.29	0.00	0.00	0.05

1.46	-0.0003	-0.21	0.26	0.00	0.00	0.04
1.47	-0.0002	-0.19	0.22	0.00	0.00	0.03
1.48	-0.0001	-0.17	0.19	0.00	0.00	0.02
1.49	-0.0001	-0.15	0.16	0.00	0.00	0.01
1.50	0.0000	-0.16	0.16	0.00	0.00	0.00
1.51	0.0001	-0.16	0.15	0.00	0.00	-0.01
1.52	0.0001	-0.19	0.17	0.00	0.00	-0.02
1.53	0.0002	-0.22	0.19	0.00	0.00	-0.03
1.54	0.0003	-0.26	0.21	0.00	0.00	-0.04
1.55	0.0004	-0.29	0.24	0.00	0.00	-0.05
1.56	0.0004	-0.33	0.27	0.00	0.00	-0.07
1.57	0.0005	-0.39	0.31	0.00	0.00	-0.08
1.58	0.0006	-0.44	0.36	0.00	0.00	-0.09
1.59	0.0007	-0.50	0.40	0.00	0.00	-0.10
1.60	0.0007	-0.55	0.45	0.00	0.00	-0.11
1.61	0.0008	-0.61	0.49	0.00	0.00	-0.12
1.62	0.0009	-0.67	0.54	0.00	0.00	-0.13
1.63	0.0010	-0.72	0.58	0.00	0.00	-0.14
1.64	0.0010	-0.78	0.63	0.00	0.00	-0.15
1.65	0.0011	-0.83	0.67	0.00	0.00	-0.16
1.66	0.0012	-0.89	0.72	0.00	0.00	-0.17
1.67	0.0013	-0.94	0.76	0.00	0.00	-0.18
1.68	0.0013	-1.00	0.81	0.00	0.00	-0.19
1.69	0.0014	-1.05	0.86	0.00	0.00	-0.20
1.70	0.0015	-1.11	0.90	0.00	0.00	-0.21
1.71	0.0016	-1.17	0.95	0.00	0.00	-0.22
1.72	0.0016	-1.22	0.99	0.00	0.00	-0.23
1.73	0.0017	-1.28	1.04	0.00	0.00	-0.24
1.74	0.0018	-1.33	1.08	0.00	0.00	-0.25
1.75	0.0019	-1.39	1.13	0.00	0.00	-0.27
1.76	0.0019	-1.44	1.17	0.00	0.00	-0.28
1.77	0.0020	-1.50	1.22	0.00	0.00	-0.29
1.78	0.0021	-1.55	1.26	0.00	0.00	-0.30
1.79	0.0022	-1.61	1.31	0.00	0.00	-0.31
1.80	0.0022	-1.67	1.35	0.00	0.00	-0.32
1.81	0.0023	-1.72	1.40	0.00	0.00	-0.33
1.82	0.0024	-1.78	1.44	0.00	0.00	-0.34
1.83	0.0025	-1.83	1.49	0.00	0.00	-0.35
1.84	0.0025	-1.89	1.53	0.00	0.00	-0.36
1.85	0.0026	-1.94	1.58	0.00	0.00	-0.37
1.86	0.0027	-2.00	1.62	0.00	0.00	-0.38
1.87	0.0028	-2.05	1.67	0.00	0.00	-0.39
1.88	0.0028	-2.11	1.71	0.00	0.00	-0.40
1.89	0.0029	-2.16	1.76	0.00	0.00	-0.41
1.90	0.0030	-2.22	1.80	0.00	0.00	-0.42
1.91	0.0031	-2.28	1.85	0.00	0.00	-0.43
1.92	0.0031	-2.33	1.89	0.00	0.00	-0.44
1.93	0.0032	-2.39	1.94	0.00	0.00	-0.46
1.94	0.0033	-2.44	1.98	0.00	0.00	-0.47
1.95	0.0034	-2.50	2.03	0.00	0.00	-0.48
1.96	0.0034	-2.55	2.07	0.00	0.00	-0.49
1.97	0.0035	-2.61	2.12	0.00	0.00	-0.50
1.98	0.0036	-2.67	2.16	0.00	0.00	-0.51
1.99	0.0037	-2.72	2.21	0.00	0.00	-0.52
2.00	0.0037	-2.78	2.25	0.00	0.00	-0.53
2.01	0.0037	-2.74	2.22	0.00	0.00	-0.52
2.02	0.0036	-2.66	2.16	0.00	0.00	-0.51

2.03	0.0035	-2.61	2.12	0.00	0.00	-0.50
2.04	0.0034	-2.56	2.07	0.00	0.00	-0.49
2.05	0.0034	-2.50	2.03	0.00	0.00	-0.48
2.06	0.0033	-2.44	1.98	0.00	0.00	-0.47
2.07	0.0032	-2.39	1.94	0.00	0.00	-0.45
2.08	0.0031	-2.33	1.89	0.00	0.00	-0.44
2.09	0.0031	-2.28	1.85	0.00	0.00	-0.43
2.10	0.0030	-2.22	1.80	0.00	0.00	-0.42
2.11	0.0029	-2.16	1.76	0.00	0.00	-0.41
2.12	0.0028	-2.11	1.71	0.00	0.00	-0.40
2.13	0.0028	-2.05	1.67	0.00	0.00	-0.39
2.14	0.0027	-2.00	1.62	0.00	0.00	-0.38
2.15	0.0026	-1.94	1.58	0.00	0.00	-0.37
2.16	0.0025	-1.89	1.53	0.00	0.00	-0.36
2.17	0.0025	-1.83	1.49	0.00	0.00	-0.35
2.18	0.0024	-1.78	1.44	0.00	0.00	-0.34
2.19	0.0023	-1.72	1.40	0.00	0.00	-0.33
2.20	0.0022	-1.67	1.35	0.00	0.00	-0.32
2.21	0.0022	-1.61	1.31	0.00	0.00	-0.31
2.22	0.0021	-1.55	1.26	0.00	0.00	-0.30
2.23	0.0020	-1.50	1.22	0.00	0.00	-0.29
2.24	0.0019	-1.44	1.17	0.00	0.00	-0.28
2.25	0.0019	-1.39	1.13	0.00	0.00	-0.27
2.26	0.0018	-1.33	1.08	0.00	0.00	-0.26
2.27	0.0017	-1.28	1.04	0.00	0.00	-0.24
2.28	0.0016	-1.22	0.99	0.00	0.00	-0.23
2.29	0.0016	-1.17	0.95	0.00	0.00	-0.22
2.30	0.0015	-1.11	0.90	0.00	0.00	-0.21
2.31	0.0014	-1.05	0.86	0.00	0.00	-0.20
2.32	0.0013	-1.00	0.81	0.00	0.00	-0.19
2.33	0.0013	-0.94	0.76	0.00	0.00	-0.18
2.34	0.0012	-0.89	0.72	0.00	0.00	-0.17
2.35	0.0011	-0.83	0.67	0.00	0.00	-0.16
2.36	0.0010	-0.78	0.63	0.00	0.00	-0.15
2.37	0.0010	-0.72	0.58	0.00	0.00	-0.14
2.38	0.0009	-0.67	0.54	0.00	0.00	-0.13
2.39	0.0008	-0.61	0.49	0.00	0.00	-0.12
2.40	0.0007	-0.55	0.45	0.00	0.00	-0.11
2.41	0.0007	-0.50	0.40	0.00	0.00	-0.10
2.42	0.0006	-0.44	0.36	0.00	0.00	-0.09
2.43	0.0005	-0.39	0.31	0.00	0.00	-0.08
2.44	0.0004	-0.33	0.27	0.00	0.00	-0.07
2.45	0.0004	-0.29	0.24	0.00	0.00	-0.05
2.46	0.0003	-0.26	0.21	0.00	0.00	-0.04
2.47	0.0002	-0.22	0.19	0.00	0.00	-0.03
2.48	0.0001	-0.19	0.17	0.00	0.00	-0.02
2.49	0.0001	-0.16	0.15	0.00	0.00	-0.01
2.50	0.0000	-0.16	0.16	0.00	0.00	0.00
2.51	-0.0001	-0.15	0.16	0.00	0.00	0.01
2.52	-0.0001	-0.17	0.19	0.00	0.00	0.02
2.53	-0.0002	-0.19	0.22	0.00	0.00	0.03
2.54	-0.0003	-0.21	0.26	0.00	0.00	0.04
2.55	-0.0004	-0.24	0.29	0.00	0.00	0.05
2.56	-0.0004	-0.27	0.33	0.00	0.00	0.06
2.57	-0.0005	-0.31	0.39	0.00	0.00	0.07
2.58	-0.0006	-0.36	0.44	0.00	0.00	0.08
2.59	-0.0007	-0.40	0.50	0.00	0.00	0.09

2.60	-0.0007	-0.45	0.55	0.00	0.00	0.10
2.61	-0.0008	-0.49	0.61	0.00	0.00	0.11
2.62	-0.0009	-0.54	0.67	0.00	0.00	0.13
2.63	-0.0010	-0.58	0.72	0.00	0.00	0.14
2.64	-0.0010	-0.63	0.78	0.00	0.00	0.15
2.65	-0.0011	-0.67	0.83	0.00	0.00	0.16
2.66	-0.0012	-0.72	0.89	0.00	0.00	0.17
2.67	-0.0013	-0.76	0.94	0.00	0.00	0.18
2.68	-0.0013	-0.81	1.00	0.00	0.00	0.19
2.69	-0.0014	-0.86	1.05	0.00	0.00	0.20
2.70	-0.0015	-0.90	1.11	0.00	0.00	0.21
2.71	-0.0016	-0.95	1.17	0.00	0.00	0.22
2.72	-0.0016	-0.99	1.22	0.00	0.00	0.23
2.73	-0.0017	-1.04	1.28	0.00	0.00	0.24
2.74	-0.0018	-1.08	1.33	0.00	0.00	0.25
2.75	-0.0019	-1.13	1.39	0.00	0.00	0.26
2.76	-0.0019	-1.17	1.44	0.00	0.00	0.27
2.77	-0.0020	-1.22	1.50	0.00	0.00	0.28
2.78	-0.0021	-1.26	1.55	0.00	0.00	0.29
2.79	-0.0022	-1.31	1.61	0.00	0.00	0.30
2.80	-0.0022	-1.35	1.67	0.00	0.00	0.31
2.81	-0.0023	-1.40	1.72	0.00	0.00	0.32
2.82	-0.0024	-1.44	1.78	0.00	0.00	0.33
2.83	-0.0025	-1.49	1.83	0.00	0.00	0.34
2.84	-0.0025	-1.53	1.89	0.00	0.00	0.35
2.85	-0.0026	-1.58	1.94	0.00	0.00	0.36
2.86	-0.0027	-1.62	2.00	0.00	0.00	0.37
2.87	-0.0028	-1.67	2.05	0.00	0.00	0.38
2.88	-0.0028	-1.71	2.11	0.00	0.00	0.39
2.89	-0.0029	-1.76	2.16	0.00	0.00	0.40
2.90	-0.0030	-1.80	2.22	0.00	0.00	0.41
2.91	-0.0031	-1.85	2.28	0.00	0.00	0.42
2.92	-0.0031	-1.89	2.33	0.00	0.00	0.43
2.93	-0.0032	-1.94	2.39	0.00	0.00	0.44
2.94	-0.0033	-1.98	2.44	0.00	0.00	0.46
2.95	-0.0034	-2.03	2.50	0.00	0.00	0.47
2.96	-0.0034	-2.07	2.55	0.00	0.00	0.47
2.97	-0.0035	-2.12	2.61	0.00	0.00	0.49
2.98	-0.0036	-2.16	2.66	0.00	0.00	0.50
2.99	-0.0037	-2.21	2.72	0.00	0.00	0.51
3.00	-0.0037	-2.25	2.78	0.00	0.00	0.52
3.01	-0.0037	-2.22	2.74	0.00	0.00	0.51
3.02	-0.0036	-2.16	2.66	0.00	0.00	0.50
3.03	-0.0035	-2.12	2.61	0.00	0.00	0.49
3.04	-0.0034	-2.07	2.56	0.00	0.00	0.48
3.05	-0.0034	-2.03	2.50	0.00	0.00	0.47
3.06	-0.0033	-1.98	2.44	0.00	0.00	0.46
3.07	-0.0032	-1.94	2.39	0.00	0.00	0.45
3.08	-0.0031	-1.89	2.33	0.00	0.00	0.43
3.09	-0.0031	-1.85	2.28	0.00	0.00	0.42
3.10	-0.0030	-1.80	2.22	0.00	0.00	0.41
3.11	-0.0029	-1.76	2.16	0.00	0.00	0.40
3.12	-0.0028	-1.71	2.11	0.00	0.00	0.39
3.13	-0.0028	-1.67	2.05	0.00	0.00	0.38
3.14	-0.0027	-1.62	2.00	0.00	0.00	0.37
3.15	-0.0026	-1.58	1.94	0.00	0.00	0.36
3.16	-0.0025	-1.53	1.89	0.00	0.00	0.35

3.17	-0.0025	-1.49	1.83	0.00	0.00	0.34
3.18	-0.0024	-1.44	1.78	0.00	0.00	0.33
3.19	-0.0023	-1.40	1.72	0.00	0.00	0.32
3.20	-0.0022	-1.35	1.67	0.00	0.00	0.31
3.21	-0.0022	-1.31	1.61	0.00	0.00	0.30
3.22	-0.0021	-1.26	1.55	0.00	0.00	0.29
3.23	-0.0020	-1.22	1.50	0.00	0.00	0.28
3.24	-0.0019	-1.17	1.44	0.00	0.00	0.27
3.25	-0.0019	-1.13	1.39	0.00	0.00	0.26
3.26	-0.0018	-1.08	1.33	0.00	0.00	0.25
3.27	-0.0017	-1.04	1.28	0.00	0.00	0.24
3.28	-0.0016	-0.99	1.22	0.00	0.00	0.23
3.29	-0.0016	-0.95	1.17	0.00	0.00	0.22
3.30	-0.0015	-0.90	1.11	0.00	0.00	0.21
3.31	-0.0014	-0.86	1.05	0.00	0.00	0.20
3.32	-0.0013	-0.81	1.00	0.00	0.00	0.19
3.33	-0.0013	-0.76	0.94	0.00	0.00	0.18
3.34	-0.0012	-0.72	0.89	0.00	0.00	0.17
3.35	-0.0011	-0.67	0.83	0.00	0.00	0.16
3.36	-0.0010	-0.63	0.78	0.00	0.00	0.15
3.37	-0.0010	-0.58	0.72	0.00	0.00	0.14
3.38	-0.0009	-0.54	0.67	0.00	0.00	0.13
3.39	-0.0008	-0.49	0.61	0.00	0.00	0.11
3.40	-0.0007	-0.45	0.55	0.00	0.00	0.10
3.41	-0.0007	-0.40	0.50	0.00	0.00	0.09
3.42	-0.0006	-0.36	0.44	0.00	0.00	0.08
3.43	-0.0005	-0.31	0.39	0.00	0.00	0.07
3.44	-0.0004	-0.27	0.33	0.00	0.00	0.06
3.45	-0.0004	-0.24	0.29	0.00	0.00	0.05
3.46	-0.0003	-0.21	0.26	0.00	0.00	0.04
3.47	-0.0002	-0.19	0.22	0.00	0.00	0.03
3.48	-0.0001	-0.17	0.19	0.00	0.00	0.02
3.49	-0.0001	-0.15	0.16	0.00	0.00	0.01
3.50	0.0000	-0.16	0.16	0.00	0.00	0.00
3.51	0.0001	-0.16	0.15	0.00	0.00	-0.01
3.52	0.0001	-0.19	0.17	0.00	0.00	-0.02
3.53	0.0002	-0.22	0.19	0.00	0.00	-0.03
3.54	0.0003	-0.26	0.21	0.00	0.00	-0.04
3.55	0.0004	-0.29	0.24	0.00	0.00	-0.05
3.56	0.0004	-0.33	0.27	0.00	0.00	-0.07
3.57	0.0005	-0.39	0.31	0.00	0.00	-0.08
3.58	0.0006	-0.44	0.36	0.00	0.00	-0.09
3.59	0.0007	-0.50	0.40	0.00	0.00	-0.10
3.60	0.0007	-0.55	0.45	0.00	0.00	-0.11
3.61	0.0008	-0.61	0.49	0.00	0.00	-0.12
3.62	0.0009	-0.67	0.54	0.00	0.00	-0.13
3.63	0.0010	-0.72	0.58	0.00	0.00	-0.14
3.64	0.0010	-0.78	0.63	0.00	0.00	-0.15
3.65	0.0011	-0.83	0.67	0.00	0.00	-0.16
3.66	0.0012	-0.89	0.72	0.00	0.00	-0.17
3.67	0.0013	-0.94	0.76	0.00	0.00	-0.18
3.68	0.0013	-1.00	0.81	0.00	0.00	-0.19
3.69	0.0014	-1.05	0.86	0.00	0.00	-0.20
3.70	0.0015	-1.11	0.90	0.00	0.00	-0.21
3.71	0.0016	-1.17	0.95	0.00	0.00	-0.22
3.72	0.0016	-1.22	0.99	0.00	0.00	-0.23
3.73	0.0017	-1.28	1.04	0.00	0.00	-0.24

3.74	0.0018	-1.33	1.08	0.00	0.00	-0.25
3.75	0.0019	-1.39	1.13	0.00	0.00	-0.27
3.76	0.0019	-1.44	1.17	0.00	0.00	-0.28
3.77	0.0020	-1.50	1.22	0.00	0.00	-0.29
3.78	0.0021	-1.55	1.26	0.00	0.00	-0.30
3.79	0.0022	-1.61	1.31	0.00	0.00	-0.31
3.80	0.0022	-1.67	1.35	0.00	0.00	-0.32
3.81	0.0023	-1.72	1.40	0.00	0.00	-0.33
3.82	0.0024	-1.78	1.44	0.00	0.00	-0.34
3.83	0.0025	-1.83	1.49	0.00	0.00	-0.35
3.84	0.0025	-1.89	1.53	0.00	0.00	-0.36
3.85	0.0026	-1.94	1.58	0.00	0.00	-0.37
3.86	0.0027	-2.00	1.62	0.00	0.00	-0.38
3.87	0.0028	-2.05	1.67	0.00	0.00	-0.39
3.88	0.0028	-2.11	1.71	0.00	0.00	-0.40
3.89	0.0029	-2.16	1.76	0.00	0.00	-0.41
3.90	0.0030	-2.22	1.80	0.00	0.00	-0.42
3.91	0.0031	-2.28	1.85	0.00	0.00	-0.43
3.92	0.0031	-2.33	1.89	0.00	0.00	-0.44
3.93	0.0032	-2.39	1.94	0.00	0.00	-0.46
3.94	0.0033	-2.44	1.98	0.00	0.00	-0.47
3.95	0.0034	-2.50	2.03	0.00	0.00	-0.48
3.96	0.0034	-2.55	2.07	0.00	0.00	-0.49
3.97	0.0035	-2.61	2.12	0.00	0.00	-0.50
3.98	0.0036	-2.66	2.16	0.00	0.00	-0.51
3.99	0.0037	-2.72	2.21	0.00	0.00	-0.52
4.00	0.0037	-2.78	2.25	0.00	0.00	-0.53
4.01	0.0037	-2.74	2.22	0.00	0.00	-0.52
4.02	0.0036	-2.66	2.16	0.00	0.00	-0.51
4.03	0.0035	-2.61	2.12	0.00	0.00	-0.50
4.04	0.0034	-2.56	2.07	0.00	0.00	-0.49
4.05	0.0034	-2.50	2.03	0.00	0.00	-0.48
4.06	0.0033	-2.44	1.98	0.00	0.00	-0.47
4.07	0.0032	-2.39	1.94	0.00	0.00	-0.46
4.08	0.0031	-2.33	1.89	0.00	0.00	-0.44
4.09	0.0031	-2.28	1.85	0.00	0.00	-0.43
4.10	0.0030	-2.22	1.80	0.00	0.00	-0.42
4.11	0.0029	-2.16	1.76	0.00	0.00	-0.41
4.12	0.0028	-2.11	1.71	0.00	0.00	-0.40
4.13	0.0028	-2.05	1.67	0.00	0.00	-0.39
4.14	0.0027	-2.00	1.62	0.00	0.00	-0.38
4.15	0.0026	-1.94	1.58	0.00	0.00	-0.37
4.16	0.0025	-1.89	1.53	0.00	0.00	-0.36
4.17	0.0025	-1.83	1.49	0.00	0.00	-0.35
4.18	0.0024	-1.78	1.44	0.00	0.00	-0.34
4.19	0.0023	-1.72	1.40	0.00	0.00	-0.33
4.20	0.0022	-1.67	1.35	0.00	0.00	-0.32
4.21	0.0022	-1.61	1.31	0.00	0.00	-0.31
4.22	0.0021	-1.55	1.26	0.00	0.00	-0.30
4.23	0.0020	-1.50	1.22	0.00	0.00	-0.29
4.24	0.0019	-1.44	1.17	0.00	0.00	-0.28
4.25	0.0019	-1.39	1.13	0.00	0.00	-0.27
4.26	0.0018	-1.33	1.08	0.00	0.00	-0.25
4.27	0.0017	-1.28	1.04	0.00	0.00	-0.24
4.28	0.0016	-1.22	0.99	0.00	0.00	-0.23
4.29	0.0016	-1.17	0.95	0.00	0.00	-0.22
4.30	0.0015	-1.11	0.90	0.00	0.00	-0.21

4.31	0.0014	-1.05	0.86	0.00	0.00	-0.20
4.32	0.0013	-1.00	0.81	0.00	0.00	-0.19
4.33	0.0013	-0.94	0.76	0.00	0.00	-0.18
4.34	0.0012	-0.89	0.72	0.00	0.00	-0.17
4.35	0.0011	-0.83	0.67	0.00	0.00	-0.16
4.36	0.0010	-0.78	0.63	0.00	0.00	-0.15
4.37	0.0010	-0.72	0.58	0.00	0.00	-0.14
4.38	0.0009	-0.67	0.54	0.00	0.00	-0.13
4.39	0.0008	-0.61	0.49	0.00	0.00	-0.12
4.40	0.0007	-0.55	0.45	0.00	0.00	-0.11
4.41	0.0007	-0.50	0.40	0.00	0.00	-0.10
4.42	0.0006	-0.44	0.36	0.00	0.00	-0.09
4.43	0.0005	-0.39	0.31	0.00	0.00	-0.08
4.44	0.0004	-0.33	0.27	0.00	0.00	-0.07
4.45	0.0004	-0.29	0.24	0.00	0.00	-0.05
4.46	0.0003	-0.26	0.21	0.00	0.00	-0.04
4.47	0.0002	-0.22	0.19	0.00	0.00	-0.03
4.48	0.0001	-0.19	0.17	0.00	0.00	-0.02
4.49	0.0001	-0.16	0.15	0.00	0.00	-0.01
4.50	0.0000	-0.16	0.16	0.00	0.00	0.00
4.51	-0.0001	-0.15	0.16	0.00	0.00	0.01
4.52	-0.0001	-0.17	0.19	0.00	0.00	0.02
4.53	-0.0002	-0.19	0.22	0.00	0.00	0.03
4.54	-0.0003	-0.21	0.26	0.00	0.00	0.04
4.55	-0.0004	-0.24	0.29	0.00	0.00	0.05
4.56	-0.0004	-0.27	0.33	0.00	0.00	0.06
4.57	-0.0005	-0.31	0.39	0.00	0.00	0.07
4.58	-0.0006	-0.36	0.44	0.00	0.00	0.08
4.59	-0.0007	-0.40	0.50	0.00	0.00	0.09
4.60	-0.0007	-0.45	0.55	0.00	0.00	0.10
4.61	-0.0008	-0.49	0.61	0.00	0.00	0.11
4.62	-0.0009	-0.54	0.67	0.00	0.00	0.13
4.63	-0.0010	-0.58	0.72	0.00	0.00	0.14
4.64	-0.0010	-0.63	0.78	0.00	0.00	0.15
4.65	-0.0011	-0.67	0.83	0.00	0.00	0.16
4.66	-0.0012	-0.72	0.89	0.00	0.00	0.17
4.67	-0.0013	-0.76	0.94	0.00	0.00	0.18
4.68	-0.0013	-0.81	1.00	0.00	0.00	0.19
4.69	-0.0014	-0.86	1.05	0.00	0.00	0.20
4.70	-0.0015	-0.90	1.11	0.00	0.00	0.21
4.71	-0.0016	-0.95	1.17	0.00	0.00	0.22
4.72	-0.0016	-0.99	1.22	0.00	0.00	0.23
4.73	-0.0017	-1.04	1.28	0.00	0.00	0.24
4.74	-0.0018	-1.08	1.33	0.00	0.00	0.25
4.75	-0.0019	-1.13	1.39	0.00	0.00	0.26
4.76	-0.0019	-1.17	1.44	0.00	0.00	0.27
4.77	-0.0020	-1.22	1.50	0.00	0.00	0.28
4.78	-0.0021	-1.26	1.55	0.00	0.00	0.29
4.79	-0.0022	-1.31	1.61	0.00	0.00	0.30
4.80	-0.0022	-1.35	1.67	0.00	0.00	0.31
4.81	-0.0023	-1.40	1.72	0.00	0.00	0.32
4.82	-0.0024	-1.44	1.78	0.00	0.00	0.33
4.83	-0.0025	-1.49	1.83	0.00	0.00	0.34
4.84	-0.0025	-1.53	1.89	0.00	0.00	0.35
4.85	-0.0026	-1.58	1.94	0.00	0.00	0.36
4.86	-0.0027	-1.62	2.00	0.00	0.00	0.37
4.87	-0.0028	-1.67	2.05	0.00	0.00	0.38

4.88	-0.0028	-1.71	2.11	0.00	0.00	0.39
4.89	-0.0029	-1.76	2.16	0.00	0.00	0.40
4.90	-0.0030	-1.80	2.22	0.00	0.00	0.41
4.91	-0.0031	-1.85	2.28	0.00	0.00	0.42
4.92	-0.0031	-1.89	2.33	0.00	0.00	0.43
4.93	-0.0032	-1.94	2.39	0.00	0.00	0.44
4.94	-0.0033	-1.98	2.44	0.00	0.00	0.46
4.95	-0.0034	-2.03	2.50	0.00	0.00	0.47
4.96	-0.0034	-2.07	2.55	0.00	0.00	0.47
4.97	-0.0035	-2.12	2.61	0.00	0.00	0.49
4.98	-0.0036	-2.16	2.66	0.00	0.00	0.50
4.99	-0.0037	-2.21	2.72	0.00	0.00	0.51
5.00	-0.0037	-2.25	2.78	0.00	0.00	0.52
5.01	-0.0037	-2.22	2.74	0.00	0.00	0.51
5.02	-0.0036	-2.16	2.66	0.00	0.00	0.50
5.03	-0.0035	-2.12	2.61	0.00	0.00	0.49
5.04	-0.0034	-2.07	2.56	0.00	0.00	0.48
5.05	-0.0034	-2.03	2.50	0.00	0.00	0.47
5.06	-0.0033	-1.98	2.44	0.00	0.00	0.46
5.07	-0.0032	-1.94	2.39	0.00	0.00	0.45
5.08	-0.0031	-1.89	2.33	0.00	0.00	0.43
5.09	-0.0031	-1.85	2.28	0.00	0.00	0.42
5.10	-0.0030	-1.80	2.22	0.00	0.00	0.41
5.11	-0.0029	-1.76	2.16	0.00	0.00	0.40
5.12	-0.0028	-1.71	2.11	0.00	0.00	0.39
5.13	-0.0028	-1.67	2.05	0.00	0.00	0.38
5.14	-0.0027	-1.62	2.00	0.00	0.00	0.37
5.15	-0.0026	-1.58	1.94	0.00	0.00	0.36
5.16	-0.0025	-1.53	1.89	0.00	0.00	0.35
5.17	-0.0025	-1.49	1.83	0.00	0.00	0.34
5.18	-0.0024	-1.44	1.78	0.00	0.00	0.33
5.19	-0.0023	-1.40	1.72	0.00	0.00	0.32
5.20	-0.0022	-1.35	1.67	0.00	0.00	0.31
5.21	-0.0022	-1.31	1.61	0.00	0.00	0.30
5.22	-0.0021	-1.26	1.55	0.00	0.00	0.29
5.23	-0.0020	-1.22	1.50	0.00	0.00	0.28
5.24	-0.0019	-1.17	1.44	0.00	0.00	0.27
5.25	-0.0019	-1.13	1.39	0.00	0.00	0.26
5.26	-0.0018	-1.08	1.33	0.00	0.00	0.25
5.27	-0.0017	-1.04	1.28	0.00	0.00	0.24
5.28	-0.0016	-0.99	1.22	0.00	0.00	0.23
5.29	-0.0016	-0.95	1.17	0.00	0.00	0.22
5.30	-0.0015	-0.90	1.11	0.00	0.00	0.21
5.31	-0.0014	-0.86	1.05	0.00	0.00	0.20
5.32	-0.0013	-0.81	1.00	0.00	0.00	0.19
5.33	-0.0013	-0.76	0.94	0.00	0.00	0.18
5.34	-0.0012	-0.72	0.89	0.00	0.00	0.17
5.35	-0.0011	-0.67	0.83	0.00	0.00	0.16
5.36	-0.0010	-0.63	0.78	0.00	0.00	0.15
5.37	-0.0010	-0.58	0.72	0.00	0.00	0.14
5.38	-0.0009	-0.54	0.67	0.00	0.00	0.13
5.39	-0.0008	-0.49	0.61	0.00	0.00	0.11
5.40	-0.0007	-0.45	0.55	0.00	0.00	0.10
5.41	-0.0007	-0.40	0.50	0.00	0.00	0.09
5.42	-0.0006	-0.36	0.44	0.00	0.00	0.08
5.43	-0.0005	-0.31	0.39	0.00	0.00	0.07
5.44	-0.0004	-0.27	0.33	0.00	0.00	0.06

5.45	-0.0004	-0.24	0.29	0.00	0.00	0.05
5.46	-0.0003	-0.21	0.26	0.00	0.00	0.04
5.47	-0.0002	-0.19	0.22	0.00	0.00	0.03
5.48	-0.0001	-0.17	0.19	0.00	0.00	0.02
5.49	-0.0001	-0.15	0.16	0.00	0.00	0.01
5.50	0.0000	-0.16	0.16	0.00	0.00	0.00
5.51	0.0001	-0.16	0.15	0.00	0.00	-0.01
5.52	0.0001	-0.19	0.17	0.00	0.00	-0.02
5.53	0.0002	-0.22	0.19	0.00	0.00	-0.03
5.54	0.0003	-0.26	0.21	0.00	0.00	-0.04
5.55	0.0004	-0.29	0.24	0.00	0.00	-0.05
5.56	0.0004	-0.33	0.27	0.00	0.00	-0.07
5.57	0.0005	-0.39	0.31	0.00	0.00	-0.08
5.58	0.0006	-0.44	0.36	0.00	0.00	-0.09
5.59	0.0007	-0.50	0.40	0.00	0.00	-0.10
5.60	0.0007	-0.55	0.45	0.00	0.00	-0.11
5.61	0.0008	-0.61	0.49	0.00	0.00	-0.12
5.62	0.0009	-0.67	0.54	0.00	0.00	-0.13
5.63	0.0010	-0.72	0.58	0.00	0.00	-0.14
5.64	0.0010	-0.78	0.63	0.00	0.00	-0.15
5.65	0.0011	-0.83	0.67	0.00	0.00	-0.16
5.66	0.0012	-0.89	0.72	0.00	0.00	-0.17
5.67	0.0013	-0.94	0.76	0.00	0.00	-0.18
5.68	0.0013	-1.00	0.81	0.00	0.00	-0.19
5.69	0.0014	-1.05	0.86	0.00	0.00	-0.20
5.70	0.0015	-1.11	0.90	0.00	0.00	-0.21
5.71	0.0016	-1.17	0.95	0.00	0.00	-0.22
5.72	0.0016	-1.22	0.99	0.00	0.00	-0.23
5.73	0.0017	-1.28	1.04	0.00	0.00	-0.24
5.74	0.0018	-1.33	1.08	0.00	0.00	-0.25
5.75	0.0019	-1.39	1.13	0.00	0.00	-0.27
5.76	0.0019	-1.44	1.17	0.00	0.00	-0.28
5.77	0.0020	-1.50	1.22	0.00	0.00	-0.29
5.78	0.0021	-1.55	1.26	0.00	0.00	-0.30
5.79	0.0022	-1.61	1.31	0.00	0.00	-0.31
5.80	0.0022	-1.67	1.35	0.00	0.00	-0.32
5.81	0.0023	-1.72	1.40	0.00	0.00	-0.33
5.82	0.0024	-1.78	1.44	0.00	0.00	-0.34
5.83	0.0025	-1.83	1.49	0.00	0.00	-0.35
5.84	0.0025	-1.89	1.53	0.00	0.00	-0.36
5.85	0.0026	-1.94	1.58	0.00	0.00	-0.37
5.86	0.0027	-2.00	1.62	0.00	0.00	-0.38
5.87	0.0028	-2.05	1.67	0.00	0.00	-0.39
5.88	0.0028	-2.11	1.71	0.00	0.00	-0.40
5.89	0.0029	-2.16	1.76	0.00	0.00	-0.41
5.90	0.0030	-2.22	1.80	0.00	0.00	-0.42
5.91	0.0031	-2.28	1.85	0.00	0.00	-0.43
5.92	0.0031	-2.33	1.89	0.00	0.00	-0.44
5.93	0.0032	-2.39	1.94	0.00	0.00	-0.46
5.94	0.0033	-2.44	1.98	0.00	0.00	-0.47
5.95	0.0034	-2.50	2.03	0.00	0.00	-0.48
5.96	0.0034	-2.55	2.07	0.00	0.00	-0.49
5.97	0.0035	-2.61	2.12	0.00	0.00	-0.50
5.98	0.0036	-2.66	2.16	0.00	0.00	-0.51
5.99	0.0037	-2.72	2.21	0.00	0.00	-0.52
6.00	0.0037	-2.78	2.25	0.00	0.00	-0.53
6.01	0.0037	-2.74	2.22	0.00	0.00	-0.52

6.02	0.0036	-2.66	2.16	0.00	0.00	-0.51
6.03	0.0035	-2.61	2.12	0.00	0.00	-0.50
6.04	0.0034	-2.56	2.07	0.00	0.00	-0.49
6.05	0.0034	-2.50	2.03	0.00	0.00	-0.48
6.06	0.0033	-2.44	1.98	0.00	0.00	-0.47
6.07	0.0032	-2.39	1.94	0.00	0.00	-0.46
6.08	0.0031	-2.33	1.89	0.00	0.00	-0.44
6.09	0.0031	-2.28	1.85	0.00	0.00	-0.43
6.10	0.0030	-2.22	1.80	0.00	0.00	-0.42
6.11	0.0029	-2.16	1.76	0.00	0.00	-0.41
6.12	0.0028	-2.11	1.71	0.00	0.00	-0.40
6.13	0.0028	-2.05	1.67	0.00	0.00	-0.39
6.14	0.0027	-2.00	1.62	0.00	0.00	-0.38
6.15	0.0026	-1.94	1.58	0.00	0.00	-0.37
6.16	0.0025	-1.89	1.53	0.00	0.00	-0.36
6.17	0.0025	-1.83	1.49	0.00	0.00	-0.35
6.18	0.0024	-1.78	1.44	0.00	0.00	-0.34
6.19	0.0023	-1.72	1.40	0.00	0.00	-0.33
6.20	0.0022	-1.67	1.35	0.00	0.00	-0.32
6.21	0.0022	-1.61	1.31	0.00	0.00	-0.31
6.22	0.0021	-1.55	1.26	0.00	0.00	-0.30
6.23	0.0020	-1.50	1.22	0.00	0.00	-0.29
6.24	0.0019	-1.44	1.17	0.00	0.00	-0.28
6.25	0.0019	-1.39	1.13	0.00	0.00	-0.26
6.26	0.0018	-1.33	1.08	0.00	0.00	-0.25
6.27	0.0017	-1.28	1.04	0.00	0.00	-0.24
6.28	0.0016	-1.22	0.99	0.00	0.00	-0.23
6.29	0.0016	-1.17	0.95	0.00	0.00	-0.22
6.30	0.0015	-1.11	0.90	0.00	0.00	-0.21
6.31	0.0014	-1.05	0.86	0.00	0.00	-0.20
6.32	0.0013	-1.00	0.81	0.00	0.00	-0.19
6.33	0.0013	-0.94	0.76	0.00	0.00	-0.18
6.34	0.0012	-0.89	0.72	0.00	0.00	-0.17
6.35	0.0011	-0.83	0.67	0.00	0.00	-0.16
6.36	0.0010	-0.78	0.63	0.00	0.00	-0.15
6.37	0.0010	-0.72	0.58	0.00	0.00	-0.14
6.38	0.0009	-0.67	0.54	0.00	0.00	-0.13
6.39	0.0008	-0.61	0.49	0.00	0.00	-0.12
6.40	0.0007	-0.55	0.45	0.00	0.00	-0.11
6.41	0.0007	-0.50	0.40	0.00	0.00	-0.10
6.42	0.0006	-0.44	0.36	0.00	0.00	-0.09
6.43	0.0005	-0.39	0.31	0.00	0.00	-0.08
6.44	0.0004	-0.33	0.27	0.00	0.00	-0.07
6.45	0.0004	-0.29	0.24	0.00	0.00	-0.05
6.46	0.0003	-0.26	0.21	0.00	0.00	-0.04
6.47	0.0002	-0.22	0.19	0.00	0.00	-0.03
6.48	0.0001	-0.19	0.17	0.00	0.00	-0.02
6.49	0.0001	-0.16	0.15	0.00	0.00	-0.01
6.50	0.0000	-0.16	0.16	0.00	0.00	0.00
6.51	-0.0001	-0.15	0.16	0.00	0.00	0.01
6.52	-0.0001	-0.17	0.19	0.00	0.00	0.02
6.53	-0.0002	-0.19	0.22	0.00	0.00	0.03
6.54	-0.0003	-0.21	0.26	0.00	0.00	0.04
6.55	-0.0004	-0.24	0.29	0.00	0.00	0.05
6.56	-0.0004	-0.27	0.33	0.00	0.00	0.06
6.57	-0.0005	-0.31	0.39	0.00	0.00	0.07
6.58	-0.0006	-0.36	0.44	0.00	0.00	0.08

6.59	-0.0007	-0.40	0.50	0.00	0.00	0.09
6.60	-0.0007	-0.45	0.55	0.00	0.00	0.10
6.61	-0.0008	-0.49	0.61	0.00	0.00	0.11
6.62	-0.0009	-0.54	0.67	0.00	0.00	0.13
6.63	-0.0010	-0.58	0.72	0.00	0.00	0.14
6.64	-0.0010	-0.63	0.78	0.00	0.00	0.15
6.65	-0.0011	-0.67	0.83	0.00	0.00	0.16
6.66	-0.0012	-0.72	0.89	0.00	0.00	0.17
6.67	-0.0013	-0.76	0.94	0.00	0.00	0.18
6.68	-0.0013	-0.81	1.00	0.00	0.00	0.19
6.69	-0.0014	-0.86	1.05	0.00	0.00	0.20
6.70	-0.0015	-0.90	1.11	0.00	0.00	0.21
6.71	-0.0016	-0.95	1.17	0.00	0.00	0.22
6.72	-0.0016	-0.99	1.22	0.00	0.00	0.23
6.73	-0.0017	-1.04	1.28	0.00	0.00	0.24
6.74	-0.0018	-1.08	1.33	0.00	0.00	0.25
6.75	-0.0019	-1.13	1.39	0.00	0.00	0.26
6.76	-0.0019	-1.17	1.44	0.00	0.00	0.27
6.77	-0.0020	-1.22	1.50	0.00	0.00	0.28
6.78	-0.0021	-1.26	1.55	0.00	0.00	0.29
6.79	-0.0022	-1.31	1.61	0.00	0.00	0.30
6.80	-0.0022	-1.35	1.67	0.00	0.00	0.31
6.81	-0.0023	-1.40	1.72	0.00	0.00	0.32
6.82	-0.0024	-1.44	1.78	0.00	0.00	0.33
6.83	-0.0025	-1.49	1.83	0.00	0.00	0.34
6.84	-0.0025	-1.53	1.89	0.00	0.00	0.35
6.85	-0.0026	-1.58	1.94	0.00	0.00	0.36
6.86	-0.0027	-1.62	2.00	0.00	0.00	0.37
6.87	-0.0028	-1.67	2.05	0.00	0.00	0.38
6.88	-0.0028	-1.71	2.11	0.00	0.00	0.39
6.89	-0.0029	-1.76	2.16	0.00	0.00	0.40
6.90	-0.0030	-1.80	2.22	0.00	0.00	0.41
6.91	-0.0031	-1.85	2.28	0.00	0.00	0.42
6.92	-0.0031	-1.89	2.33	0.00	0.00	0.43
6.93	-0.0032	-1.94	2.39	0.00	0.00	0.44
6.94	-0.0033	-1.98	2.44	0.00	0.00	0.46
6.95	-0.0034	-2.03	2.50	0.00	0.00	0.47
6.96	-0.0034	-2.07	2.55	0.00	0.00	0.47
6.97	-0.0035	-2.12	2.61	0.00	0.00	0.49
6.98	-0.0036	-2.16	2.66	0.00	0.00	0.50
6.99	-0.0037	-2.21	2.72	0.00	0.00	0.51
7.00	-0.0037	-2.25	2.78	0.00	0.00	0.52
7.01	-0.0037	-2.22	2.74	0.00	0.00	0.51
7.02	-0.0036	-2.16	2.66	0.00	0.00	0.50
7.03	-0.0035	-2.12	2.61	0.00	0.00	0.49
7.04	-0.0034	-2.07	2.56	0.00	0.00	0.48
7.05	-0.0034	-2.03	2.50	0.00	0.00	0.47
7.06	-0.0033	-1.98	2.44	0.00	0.00	0.45
7.07	-0.0032	-1.94	2.39	0.00	0.00	0.44
7.08	-0.0031	-1.89	2.33	0.00	0.00	0.43
7.09	-0.0031	-1.85	2.28	0.00	0.00	0.42
7.10	-0.0030	-1.80	2.22	0.00	0.00	0.41
7.11	-0.0029	-1.76	2.16	0.00	0.00	0.40
7.12	-0.0028	-1.71	2.11	0.00	0.00	0.39
7.13	-0.0028	-1.67	2.05	0.00	0.00	0.38
7.14	-0.0027	-1.62	2.00	0.00	0.00	0.37
7.15	-0.0026	-1.58	1.94	0.00	0.00	0.36

7.16	-0.0025	-1.53	1.89	0.00	0.00	0.35
7.17	-0.0025	-1.49	1.83	0.00	0.00	0.34
7.18	-0.0024	-1.44	1.78	0.00	0.00	0.33
7.19	-0.0023	-1.40	1.72	0.00	0.00	0.32
7.20	-0.0022	-1.35	1.67	0.00	0.00	0.31
7.21	-0.0022	-1.31	1.61	0.00	0.00	0.30
7.22	-0.0021	-1.26	1.55	0.00	0.00	0.29
7.23	-0.0020	-1.22	1.50	0.00	0.00	0.28
7.24	-0.0019	-1.17	1.44	0.00	0.00	0.27
7.25	-0.0019	-1.13	1.39	0.00	0.00	0.26
7.26	-0.0018	-1.08	1.33	0.00	0.00	0.25
7.27	-0.0017	-1.04	1.28	0.00	0.00	0.24
7.28	-0.0016	-0.99	1.22	0.00	0.00	0.23
7.29	-0.0016	-0.95	1.17	0.00	0.00	0.22
7.30	-0.0015	-0.90	1.11	0.00	0.00	0.21
7.31	-0.0014	-0.86	1.05	0.00	0.00	0.20
7.32	-0.0013	-0.81	1.00	0.00	0.00	0.19
7.33	-0.0013	-0.76	0.94	0.00	0.00	0.18
7.34	-0.0012	-0.72	0.89	0.00	0.00	0.17
7.35	-0.0011	-0.67	0.83	0.00	0.00	0.16
7.36	-0.0010	-0.63	0.78	0.00	0.00	0.15
7.37	-0.0010	-0.58	0.72	0.00	0.00	0.14
7.38	-0.0009	-0.54	0.67	0.00	0.00	0.13
7.39	-0.0008	-0.49	0.61	0.00	0.00	0.11
7.40	-0.0007	-0.45	0.55	0.00	0.00	0.11
7.41	-0.0007	-0.40	0.50	0.00	0.00	0.09
7.42	-0.0006	-0.36	0.44	0.00	0.00	0.08
7.43	-0.0005	-0.31	0.39	0.00	0.00	0.07
7.44	-0.0004	-0.27	0.33	0.00	0.00	0.06
7.45	-0.0004	-0.24	0.29	0.00	0.00	0.05
7.46	-0.0003	-0.21	0.26	0.00	0.00	0.04
7.47	-0.0002	-0.19	0.22	0.00	0.00	0.03
7.48	-0.0001	-0.17	0.19	0.00	0.00	0.02
7.49	-0.0001	-0.15	0.16	0.00	0.00	0.01
7.50	0.0000	-0.16	0.16	0.00	0.00	0.00
7.51	0.0001	-0.16	0.15	0.00	0.00	-0.01
7.52	0.0001	-0.19	0.17	0.00	0.00	-0.02
7.53	0.0002	-0.22	0.19	0.00	0.00	-0.03
7.54	0.0003	-0.26	0.21	0.00	0.00	-0.04
7.55	0.0004	-0.29	0.24	0.00	0.00	-0.05
7.56	0.0004	-0.33	0.27	0.00	0.00	-0.07
7.57	0.0005	-0.39	0.31	0.00	0.00	-0.08
7.58	0.0006	-0.44	0.36	0.00	0.00	-0.09
7.59	0.0007	-0.50	0.40	0.00	0.00	-0.10
7.60	0.0007	-0.55	0.45	0.00	0.00	-0.11
7.61	0.0008	-0.61	0.49	0.00	0.00	-0.12
7.62	0.0009	-0.67	0.54	0.00	0.00	-0.13
7.63	0.0010	-0.72	0.58	0.00	0.00	-0.14
7.64	0.0010	-0.78	0.63	0.00	0.00	-0.15
7.65	0.0011	-0.83	0.67	0.00	0.00	-0.16
7.66	0.0012	-0.89	0.72	0.00	0.00	-0.17
7.67	0.0013	-0.94	0.76	0.00	0.00	-0.18
7.68	0.0013	-1.00	0.81	0.00	0.00	-0.19
7.69	0.0014	-1.05	0.86	0.00	0.00	-0.20
7.70	0.0015	-1.11	0.90	0.00	0.00	-0.21
7.71	0.0016	-1.17	0.95	0.00	0.00	-0.22
7.72	0.0016	-1.22	0.99	0.00	0.00	-0.23

7.73	0.0017	-1.28	1.04	0.00	0.00	-0.24
7.74	0.0018	-1.33	1.08	0.00	0.00	-0.25
7.75	0.0019	-1.39	1.13	0.00	0.00	-0.27
7.76	0.0019	-1.44	1.17	0.00	0.00	-0.28
7.77	0.0020	-1.50	1.22	0.00	0.00	-0.29
7.78	0.0021	-1.55	1.26	0.00	0.00	-0.30
7.79	0.0022	-1.61	1.31	0.00	0.00	-0.31
7.80	0.0022	-1.67	1.35	0.00	0.00	-0.32
7.81	0.0023	-1.72	1.40	0.00	0.00	-0.33
7.82	0.0024	-1.78	1.44	0.00	0.00	-0.34
7.83	0.0025	-1.83	1.49	0.00	0.00	-0.35
7.84	0.0025	-1.89	1.53	0.00	0.00	-0.36
7.85	0.0026	-1.94	1.58	0.00	0.00	-0.37
7.86	0.0027	-2.00	1.62	0.00	0.00	-0.38
7.87	0.0028	-2.05	1.67	0.00	0.00	-0.39
7.88	0.0028	-2.11	1.71	0.00	0.00	-0.40
7.89	0.0029	-2.16	1.76	0.00	0.00	-0.41
7.90	0.0030	-2.22	1.80	0.00	0.00	-0.42
7.91	0.0031	-2.28	1.85	0.00	0.00	-0.43
7.92	0.0031	-2.33	1.89	0.00	0.00	-0.44
7.93	0.0032	-2.39	1.94	0.00	0.00	-0.46
7.94	0.0033	-2.44	1.98	0.00	0.00	-0.47
7.95	0.0034	-2.50	2.03	0.00	0.00	-0.48
7.96	0.0034	-2.55	2.07	0.00	0.00	-0.49
7.97	0.0035	-2.61	2.12	0.00	0.00	-0.50
7.98	0.0036	-2.66	2.16	0.00	0.00	-0.51
7.99	0.0037	-2.72	2.21	0.00	0.00	-0.52
8.00	0.0037	-2.78	2.25	0.00	0.00	-0.53
8.01	0.0037	-2.74	2.22	0.00	0.00	-0.52
8.02	0.0036	-2.66	2.16	0.00	0.00	-0.51
8.03	0.0035	-2.61	2.12	0.00	0.00	-0.50
8.04	0.0034	-2.56	2.07	0.00	0.00	-0.49
8.05	0.0034	-2.50	2.03	0.00	0.00	-0.48
8.06	0.0033	-2.44	1.98	0.00	0.00	-0.47
8.07	0.0032	-2.39	1.94	0.00	0.00	-0.46
8.08	0.0031	-2.33	1.89	0.00	0.00	-0.44
8.09	0.0031	-2.28	1.85	0.00	0.00	-0.43
8.10	0.0030	-2.22	1.80	0.00	0.00	-0.42
8.11	0.0029	-2.16	1.76	0.00	0.00	-0.41
8.12	0.0028	-2.11	1.71	0.00	0.00	-0.40
8.13	0.0028	-2.05	1.67	0.00	0.00	-0.39
8.14	0.0027	-2.00	1.62	0.00	0.00	-0.38
8.15	0.0026	-1.94	1.58	0.00	0.00	-0.37
8.16	0.0025	-1.89	1.53	0.00	0.00	-0.36
8.17	0.0025	-1.83	1.49	0.00	0.00	-0.35
8.18	0.0024	-1.78	1.44	0.00	0.00	-0.34
8.19	0.0023	-1.72	1.40	0.00	0.00	-0.33
8.20	0.0022	-1.67	1.35	0.00	0.00	-0.32
8.21	0.0022	-1.61	1.31	0.00	0.00	-0.31
8.22	0.0021	-1.55	1.26	0.00	0.00	-0.30
8.23	0.0020	-1.50	1.22	0.00	0.00	-0.29
8.24	0.0019	-1.44	1.17	0.00	0.00	-0.28
8.25	0.0019	-1.39	1.13	0.00	0.00	-0.27
8.26	0.0018	-1.33	1.08	0.00	0.00	-0.25
8.27	0.0017	-1.28	1.04	0.00	0.00	-0.24
8.28	0.0016	-1.22	0.99	0.00	0.00	-0.23
8.29	0.0016	-1.17	0.95	0.00	0.00	-0.22

8.30	0.0015	-1.11	0.90	0.00	0.00	-0.21
8.31	0.0014	-1.05	0.86	0.00	0.00	-0.20
8.32	0.0013	-1.00	0.81	0.00	0.00	-0.19
8.33	0.0013	-0.94	0.76	0.00	0.00	-0.18
8.34	0.0012	-0.89	0.72	0.00	0.00	-0.17
8.35	0.0011	-0.83	0.67	0.00	0.00	-0.16
8.36	0.0010	-0.78	0.63	0.00	0.00	-0.15
8.37	0.0010	-0.72	0.58	0.00	0.00	-0.14
8.38	0.0009	-0.67	0.54	0.00	0.00	-0.13
8.39	0.0008	-0.61	0.49	0.00	0.00	-0.12
8.40	0.0007	-0.55	0.45	0.00	0.00	-0.11
8.41	0.0007	-0.50	0.40	0.00	0.00	-0.10
8.42	0.0006	-0.44	0.36	0.00	0.00	-0.09
8.43	0.0005	-0.39	0.31	0.00	0.00	-0.08
8.44	0.0004	-0.33	0.27	0.00	0.00	-0.07
8.45	0.0004	-0.29	0.24	0.00	0.00	-0.05
8.46	0.0003	-0.26	0.21	0.00	0.00	-0.04
8.47	0.0002	-0.22	0.19	0.00	0.00	-0.03
8.48	0.0001	-0.19	0.17	0.00	0.00	-0.02
8.49	0.0001	-0.16	0.15	0.00	0.00	-0.01
8.50	0.0000	-0.16	0.16	0.00	0.00	0.00
8.51	-0.0001	-0.15	0.16	0.00	0.00	0.01
8.52	-0.0001	-0.17	0.19	0.00	0.00	0.02
8.53	-0.0002	-0.19	0.22	0.00	0.00	0.03
8.54	-0.0003	-0.21	0.26	0.00	0.00	0.04
8.55	-0.0004	-0.24	0.29	0.00	0.00	0.05
8.56	-0.0004	-0.27	0.33	0.00	0.00	0.06
8.57	-0.0005	-0.31	0.39	0.00	0.00	0.07
8.58	-0.0006	-0.36	0.44	0.00	0.00	0.08
8.59	-0.0007	-0.40	0.50	0.00	0.00	0.09
8.60	-0.0007	-0.45	0.55	0.00	0.00	0.10
8.61	-0.0008	-0.49	0.61	0.00	0.00	0.11
8.62	-0.0009	-0.54	0.67	0.00	0.00	0.13
8.63	-0.0010	-0.58	0.72	0.00	0.00	0.14
8.64	-0.0010	-0.63	0.78	0.00	0.00	0.15
8.65	-0.0011	-0.67	0.83	0.00	0.00	0.16
8.66	-0.0012	-0.72	0.89	0.00	0.00	0.17
8.67	-0.0013	-0.76	0.94	0.00	0.00	0.18
8.68	-0.0013	-0.81	1.00	0.00	0.00	0.19
8.69	-0.0014	-0.86	1.05	0.00	0.00	0.20
8.70	-0.0015	-0.90	1.11	0.00	0.00	0.21
8.71	-0.0016	-0.95	1.17	0.00	0.00	0.22
8.72	-0.0016	-0.99	1.22	0.00	0.00	0.23
8.73	-0.0017	-1.04	1.28	0.00	0.00	0.24
8.74	-0.0018	-1.08	1.33	0.00	0.00	0.25
8.75	-0.0019	-1.13	1.39	0.00	0.00	0.26
8.76	-0.0019	-1.17	1.44	0.00	0.00	0.27
8.77	-0.0020	-1.22	1.50	0.00	0.00	0.28
8.78	-0.0021	-1.26	1.55	0.00	0.00	0.29
8.79	-0.0022	-1.31	1.61	0.00	0.00	0.30
8.80	-0.0022	-1.35	1.67	0.00	0.00	0.31
8.81	-0.0023	-1.40	1.72	0.00	0.00	0.32
8.82	-0.0024	-1.44	1.78	0.00	0.00	0.33
8.83	-0.0025	-1.49	1.83	0.00	0.00	0.34
8.84	-0.0025	-1.53	1.89	0.00	0.00	0.35
8.85	-0.0026	-1.58	1.94	0.00	0.00	0.36
8.86	-0.0027	-1.62	2.00	0.00	0.00	0.37

8.87	-0.0028	-1.67	2.05	0.00	0.00	0.38
8.88	-0.0028	-1.71	2.11	0.00	0.00	0.39
8.89	-0.0029	-1.76	2.16	0.00	0.00	0.40
8.90	-0.0030	-1.80	2.22	0.00	0.00	0.41
8.91	-0.0031	-1.85	2.28	0.00	0.00	0.42
8.92	-0.0031	-1.89	2.33	0.00	0.00	0.43
8.93	-0.0032	-1.94	2.39	0.00	0.00	0.44
8.94	-0.0033	-1.98	2.44	0.00	0.00	0.46
8.95	-0.0034	-2.03	2.50	0.00	0.00	0.47
8.96	-0.0034	-2.07	2.55	0.00	0.00	0.47
8.97	-0.0035	-2.12	2.61	0.00	0.00	0.49
8.98	-0.0036	-2.16	2.66	0.00	0.00	0.50
8.99	-0.0037	-2.21	2.72	0.00	0.00	0.51
9.00	-0.0037	-2.25	2.78	0.00	0.00	0.52
9.01	-0.0037	-2.22	2.74	0.00	0.00	0.51
9.02	-0.0036	-2.16	2.66	0.00	0.00	0.50
9.03	-0.0035	-2.12	2.61	0.00	0.00	0.49
9.04	-0.0034	-2.07	2.56	0.00	0.00	0.48
9.05	-0.0034	-2.03	2.50	0.00	0.00	0.47
9.06	-0.0033	-1.98	2.44	0.00	0.00	0.46
9.07	-0.0032	-1.94	2.39	0.00	0.00	0.45
9.08	-0.0031	-1.89	2.33	0.00	0.00	0.43
9.09	-0.0031	-1.85	2.28	0.00	0.00	0.42
9.10	-0.0030	-1.80	2.22	0.00	0.00	0.41
9.11	-0.0029	-1.76	2.16	0.00	0.00	0.40
9.12	-0.0028	-1.71	2.11	0.00	0.00	0.39
9.13	-0.0028	-1.67	2.05	0.00	0.00	0.38
9.14	-0.0027	-1.62	2.00	0.00	0.00	0.37
9.15	-0.0026	-1.58	1.94	0.00	0.00	0.36
9.16	-0.0025	-1.53	1.89	0.00	0.00	0.35
9.17	-0.0025	-1.49	1.83	0.00	0.00	0.34
9.18	-0.0024	-1.44	1.78	0.00	0.00	0.33
9.19	-0.0023	-1.40	1.72	0.00	0.00	0.32
9.20	-0.0022	-1.35	1.67	0.00	0.00	0.31
9.21	-0.0022	-1.31	1.61	0.00	0.00	0.30
9.22	-0.0021	-1.26	1.55	0.00	0.00	0.29
9.23	-0.0020	-1.22	1.50	0.00	0.00	0.28
9.24	-0.0019	-1.17	1.44	0.00	0.00	0.27
9.25	-0.0019	-1.13	1.39	0.00	0.00	0.26
9.26	-0.0018	-1.08	1.33	0.00	0.00	0.25
9.27	-0.0017	-1.04	1.28	0.00	0.00	0.24
9.28	-0.0016	-0.99	1.22	0.00	0.00	0.23
9.29	-0.0016	-0.95	1.17	0.00	0.00	0.22
9.30	-0.0015	-0.90	1.11	0.00	0.00	0.21
9.31	-0.0014	-0.86	1.05	0.00	0.00	0.20
9.32	-0.0013	-0.81	1.00	0.00	0.00	0.19
9.33	-0.0013	-0.76	0.94	0.00	0.00	0.18
9.34	-0.0012	-0.72	0.89	0.00	0.00	0.17
9.35	-0.0011	-0.67	0.83	0.00	0.00	0.16
9.36	-0.0010	-0.63	0.78	0.00	0.00	0.15
9.37	-0.0010	-0.58	0.72	0.00	0.00	0.14
9.38	-0.0009	-0.54	0.67	0.00	0.00	0.13
9.39	-0.0008	-0.49	0.61	0.00	0.00	0.11
9.40	-0.0007	-0.45	0.55	0.00	0.00	0.10
9.41	-0.0007	-0.40	0.50	0.00	0.00	0.09
9.42	-0.0006	-0.36	0.44	0.00	0.00	0.08
9.43	-0.0005	-0.31	0.39	0.00	0.00	0.07

9.44	-0.0004	-0.27	0.33	0.00	0.00	0.06
9.45	-0.0004	-0.24	0.29	0.00	0.00	0.05
9.46	-0.0003	-0.21	0.26	0.00	0.00	0.04
9.47	-0.0002	-0.19	0.22	0.00	0.00	0.03
9.48	-0.0001	-0.17	0.19	0.00	0.00	0.02
9.49	-0.0001	-0.15	0.16	0.00	0.00	0.01
9.50	0.0000	-0.16	0.16	0.00	0.00	0.00
9.51	0.0001	-0.16	0.15	0.00	0.00	-0.01
9.52	0.0001	-0.19	0.17	0.00	0.00	-0.02
9.53	0.0002	-0.22	0.19	0.00	0.00	-0.03
9.54	0.0003	-0.26	0.21	0.00	0.00	-0.04
9.55	0.0004	-0.29	0.24	0.00	0.00	-0.05
9.56	0.0004	-0.33	0.27	0.00	0.00	-0.07
9.57	0.0005	-0.39	0.31	0.00	0.00	-0.08
9.58	0.0006	-0.44	0.36	0.00	0.00	-0.09
9.59	0.0007	-0.50	0.40	0.00	0.00	-0.10
9.60	0.0007	-0.55	0.45	0.00	0.00	-0.11
9.61	0.0008	-0.61	0.49	0.00	0.00	-0.12
9.62	0.0009	-0.67	0.54	0.00	0.00	-0.13
9.63	0.0010	-0.72	0.58	0.00	0.00	-0.14
9.64	0.0010	-0.78	0.63	0.00	0.00	-0.15
9.65	0.0011	-0.83	0.67	0.00	0.00	-0.16
9.66	0.0012	-0.89	0.72	0.00	0.00	-0.17
9.67	0.0013	-0.94	0.76	0.00	0.00	-0.18
9.68	0.0013	-1.00	0.81	0.00	0.00	-0.19
9.69	0.0014	-1.05	0.86	0.00	0.00	-0.20
9.70	0.0015	-1.11	0.90	0.00	0.00	-0.21
9.71	0.0016	-1.17	0.95	0.00	0.00	-0.22
9.72	0.0016	-1.22	0.99	0.00	0.00	-0.23
9.73	0.0017	-1.28	1.04	0.00	0.00	-0.24
9.74	0.0018	-1.33	1.08	0.00	0.00	-0.25
9.75	0.0019	-1.39	1.13	0.00	0.00	-0.27
9.76	0.0019	-1.44	1.17	0.00	0.00	-0.28
9.77	0.0020	-1.50	1.22	0.00	0.00	-0.29
9.78	0.0021	-1.55	1.26	0.00	0.00	-0.30
9.79	0.0022	-1.61	1.31	0.00	0.00	-0.31
9.80	0.0022	-1.67	1.35	0.00	0.00	-0.32
9.81	0.0023	-1.72	1.40	0.00	0.00	-0.33
9.82	0.0024	-1.78	1.44	0.00	0.00	-0.34
9.83	0.0025	-1.83	1.49	0.00	0.00	-0.35
9.84	0.0025	-1.89	1.53	0.00	0.00	-0.36
9.85	0.0026	-1.94	1.58	0.00	0.00	-0.37
9.86	0.0027	-2.00	1.62	0.00	0.00	-0.38
9.87	0.0028	-2.05	1.67	0.00	0.00	-0.39
9.88	0.0028	-2.11	1.71	0.00	0.00	-0.40
9.89	0.0029	-2.16	1.76	0.00	0.00	-0.41
9.90	0.0030	-2.22	1.80	0.00	0.00	-0.42
9.91	0.0031	-2.28	1.85	0.00	0.00	-0.43
9.92	0.0031	-2.33	1.89	0.00	0.00	-0.44
9.93	0.0032	-2.39	1.94	0.00	0.00	-0.46
9.94	0.0033	-2.44	1.98	0.00	0.00	-0.47
9.95	0.0034	-2.50	2.03	0.00	0.00	-0.48
9.96	0.0034	-2.55	2.07	0.00	0.00	-0.49
9.97	0.0035	-2.61	2.12	0.00	0.00	-0.50
9.98	0.0036	-2.66	2.16	0.00	0.00	-0.51
9.99	0.0037	-2.72	2.21	0.00	0.00	-0.52
10.00	0.0037	-2.78	2.25	0.00	0.00	-0.53

10.01	0.0037	-2.74	2.22	0.00	0.00	-0.52
10.02	0.0036	-2.66	2.16	0.00	0.00	-0.51
10.03	0.0035	-2.61	2.12	0.00	0.00	-0.50
10.04	0.0034	-2.56	2.07	0.00	0.00	-0.49
10.05	0.0034	-2.50	2.03	0.00	0.00	-0.48
10.06	0.0033	-2.44	1.98	0.00	0.00	-0.47
10.07	0.0032	-2.39	1.94	0.00	0.00	-0.46
10.08	0.0031	-2.33	1.89	0.00	0.00	-0.44
10.09	0.0031	-2.28	1.85	0.00	0.00	-0.43
10.10	0.0030	-2.22	1.80	0.00	0.00	-0.42
10.11	0.0029	-2.16	1.76	0.00	0.00	-0.41
10.12	0.0028	-2.11	1.71	0.00	0.00	-0.40
10.13	0.0028	-2.05	1.67	0.00	0.00	-0.39
10.14	0.0027	-2.00	1.62	0.00	0.00	-0.38
10.15	0.0026	-1.94	1.58	0.00	0.00	-0.37
10.16	0.0025	-1.89	1.53	0.00	0.00	-0.36
10.17	0.0025	-1.83	1.49	0.00	0.00	-0.35
10.18	0.0024	-1.78	1.44	0.00	0.00	-0.34
10.19	0.0023	-1.72	1.40	0.00	0.00	-0.33
10.20	0.0022	-1.67	1.35	0.00	0.00	-0.32
10.21	0.0022	-1.61	1.31	0.00	0.00	-0.31
10.22	0.0021	-1.55	1.26	0.00	0.00	-0.30
10.23	0.0020	-1.50	1.22	0.00	0.00	-0.29
10.24	0.0019	-1.44	1.17	0.00	0.00	-0.28
10.25	0.0019	-1.39	1.13	0.00	0.00	-0.27
10.26	0.0018	-1.33	1.08	0.00	0.00	-0.25
10.27	0.0017	-1.28	1.04	0.00	0.00	-0.24
10.28	0.0016	-1.22	0.99	0.00	0.00	-0.23
10.29	0.0016	-1.17	0.95	0.00	0.00	-0.22
10.30	0.0015	-1.11	0.90	0.00	0.00	-0.21
10.31	0.0014	-1.05	0.86	0.00	0.00	-0.20
10.32	0.0013	-1.00	0.81	0.00	0.00	-0.19
10.33	0.0013	-0.94	0.76	0.00	0.00	-0.18
10.34	0.0012	-0.89	0.72	0.00	0.00	-0.17
10.35	0.0011	-0.83	0.67	0.00	0.00	-0.16
10.36	0.0010	-0.78	0.63	0.00	0.00	-0.15
10.37	0.0010	-0.72	0.58	0.00	0.00	-0.14
10.38	0.0009	-0.67	0.54	0.00	0.00	-0.13
10.39	0.0008	-0.61	0.49	0.00	0.00	-0.12
10.40	0.0007	-0.55	0.45	0.00	0.00	-0.11
10.41	0.0007	-0.50	0.40	0.00	0.00	-0.10
10.42	0.0006	-0.44	0.36	0.00	0.00	-0.09
10.43	0.0005	-0.39	0.31	0.00	0.00	-0.08
10.44	0.0004	-0.33	0.27	0.00	0.00	-0.07
10.45	0.0004	-0.29	0.24	0.00	0.00	-0.05
10.46	0.0003	-0.26	0.21	0.00	0.00	-0.04
10.47	0.0002	-0.22	0.19	0.00	0.00	-0.03
10.48	0.0001	-0.19	0.17	0.00	0.00	-0.02
10.49	0.0001	-0.16	0.15	0.00	0.00	-0.01
10.50	0.0000	-0.16	0.16	0.00	0.00	0.00
10.51	-0.0001	-0.15	0.16	0.00	0.00	0.01
10.52	-0.0001	-0.17	0.19	0.00	0.00	0.02
10.53	-0.0002	-0.19	0.22	0.00	0.00	0.03
10.54	-0.0003	-0.21	0.26	0.00	0.00	0.04
10.55	-0.0004	-0.24	0.29	0.00	0.00	0.05
10.56	-0.0004	-0.27	0.33	0.00	0.00	0.06
10.57	-0.0005	-0.31	0.39	0.00	0.00	0.07

10.58	-0.0006	-0.36	0.44	0.00	0.00	0.08
10.59	-0.0007	-0.40	0.50	0.00	0.00	0.09
10.60	-0.0007	-0.45	0.55	0.00	0.00	0.10
10.61	-0.0008	-0.49	0.61	0.00	0.00	0.11
10.62	-0.0009	-0.54	0.67	0.00	0.00	0.13
10.63	-0.0010	-0.58	0.72	0.00	0.00	0.14
10.64	-0.0010	-0.63	0.78	0.00	0.00	0.15
10.65	-0.0011	-0.67	0.83	0.00	0.00	0.16
10.66	-0.0012	-0.72	0.89	0.00	0.00	0.17
10.67	-0.0013	-0.76	0.94	0.00	0.00	0.18
10.68	-0.0013	-0.81	1.00	0.00	0.00	0.19
10.69	-0.0014	-0.86	1.05	0.00	0.00	0.20
10.70	-0.0015	-0.90	1.11	0.00	0.00	0.21
10.71	-0.0016	-0.95	1.17	0.00	0.00	0.22
10.72	-0.0016	-0.99	1.22	0.00	0.00	0.23
10.73	-0.0017	-1.04	1.28	0.00	0.00	0.24
10.74	-0.0018	-1.08	1.33	0.00	0.00	0.25
10.75	-0.0019	-1.13	1.39	0.00	0.00	0.26
10.76	-0.0019	-1.17	1.44	0.00	0.00	0.27
10.77	-0.0020	-1.22	1.50	0.00	0.00	0.28
10.78	-0.0021	-1.26	1.55	0.00	0.00	0.29
10.79	-0.0022	-1.31	1.61	0.00	0.00	0.30
10.80	-0.0022	-1.35	1.67	0.00	0.00	0.31
10.81	-0.0023	-1.40	1.72	0.00	0.00	0.32
10.82	-0.0024	-1.44	1.78	0.00	0.00	0.33
10.83	-0.0025	-1.49	1.83	0.00	0.00	0.34
10.84	-0.0025	-1.53	1.89	0.00	0.00	0.35
10.85	-0.0026	-1.58	1.94	0.00	0.00	0.36
10.86	-0.0027	-1.62	2.00	0.00	0.00	0.37
10.87	-0.0028	-1.67	2.05	0.00	0.00	0.38
10.88	-0.0028	-1.71	2.11	0.00	0.00	0.39
10.89	-0.0029	-1.76	2.16	0.00	0.00	0.40
10.90	-0.0030	-1.80	2.22	0.00	0.00	0.41
10.91	-0.0031	-1.85	2.28	0.00	0.00	0.42
10.92	-0.0031	-1.89	2.33	0.00	0.00	0.43
10.93	-0.0032	-1.94	2.39	0.00	0.00	0.44
10.94	-0.0033	-1.98	2.44	0.00	0.00	0.46
10.95	-0.0034	-2.03	2.50	0.00	0.00	0.47
10.96	-0.0034	-2.07	2.55	0.00	0.00	0.47
10.97	-0.0035	-2.12	2.61	0.00	0.00	0.49
10.98	-0.0036	-2.16	2.66	0.00	0.00	0.50
10.99	-0.0037	-2.21	2.72	0.00	0.00	0.51
11.00	-0.0037	-2.25	2.78	0.00	0.00	0.52
11.01	-0.0037	-2.22	2.74	0.00	0.00	0.51
11.02	-0.0036	-2.16	2.66	0.00	0.00	0.50
11.03	-0.0035	-2.12	2.61	0.00	0.00	0.49
11.04	-0.0034	-2.07	2.56	0.00	0.00	0.48
11.05	-0.0034	-2.03	2.50	0.00	0.00	0.47
11.06	-0.0033	-1.98	2.44	0.00	0.00	0.46
11.07	-0.0032	-1.94	2.39	0.00	0.00	0.45
11.08	-0.0031	-1.89	2.33	0.00	0.00	0.43
11.09	-0.0031	-1.85	2.28	0.00	0.00	0.42
11.10	-0.0030	-1.80	2.22	0.00	0.00	0.41
11.11	-0.0029	-1.76	2.16	0.00	0.00	0.40
11.12	-0.0028	-1.71	2.11	0.00	0.00	0.39
11.13	-0.0028	-1.67	2.05	0.00	0.00	0.38
11.14	-0.0027	-1.62	2.00	0.00	0.00	0.37

11.15	-0.0026	-1.58	1.94	0.00	0.00	0.36
11.16	-0.0025	-1.53	1.89	0.00	0.00	0.35
11.17	-0.0025	-1.49	1.83	0.00	0.00	0.34
11.18	-0.0024	-1.44	1.78	0.00	0.00	0.33
11.19	-0.0023	-1.40	1.72	0.00	0.00	0.32
11.20	-0.0022	-1.35	1.67	0.00	0.00	0.31
11.21	-0.0022	-1.31	1.61	0.00	0.00	0.30
11.22	-0.0021	-1.26	1.55	0.00	0.00	0.29
11.23	-0.0020	-1.22	1.50	0.00	0.00	0.28
11.24	-0.0019	-1.17	1.44	0.00	0.00	0.27
11.25	-0.0019	-1.13	1.39	0.00	0.00	0.26
11.26	-0.0018	-1.08	1.33	0.00	0.00	0.25
11.27	-0.0017	-1.04	1.28	0.00	0.00	0.24
11.28	-0.0016	-0.99	1.22	0.00	0.00	0.23
11.29	-0.0016	-0.95	1.17	0.00	0.00	0.22
11.30	-0.0015	-0.90	1.11	0.00	0.00	0.21
11.31	-0.0014	-0.86	1.05	0.00	0.00	0.20
11.32	-0.0013	-0.81	1.00	0.00	0.00	0.19
11.33	-0.0013	-0.76	0.94	0.00	0.00	0.18
11.34	-0.0012	-0.72	0.89	0.00	0.00	0.17
11.35	-0.0011	-0.67	0.83	0.00	0.00	0.16
11.36	-0.0010	-0.63	0.78	0.00	0.00	0.15
11.37	-0.0010	-0.58	0.72	0.00	0.00	0.14
11.38	-0.0009	-0.54	0.67	0.00	0.00	0.13
11.39	-0.0008	-0.49	0.61	0.00	0.00	0.11
11.40	-0.0007	-0.45	0.55	0.00	0.00	0.10
11.41	-0.0007	-0.40	0.50	0.00	0.00	0.09
11.42	-0.0006	-0.36	0.44	0.00	0.00	0.08
11.43	-0.0005	-0.31	0.39	0.00	0.00	0.07
11.44	-0.0004	-0.27	0.33	0.00	0.00	0.06
11.45	-0.0004	-0.24	0.29	0.00	0.00	0.05
11.46	-0.0003	-0.21	0.26	0.00	0.00	0.04
11.47	-0.0002	-0.19	0.22	0.00	0.00	0.03
11.48	-0.0001	-0.17	0.19	0.00	0.00	0.02
11.49	-0.0001	-0.15	0.16	0.00	0.00	0.01
11.50	0.0000	-0.16	0.16	0.00	0.00	0.00
11.51	0.0001	-0.16	0.15	0.00	0.00	-0.01
11.52	0.0001	-0.19	0.17	0.00	0.00	-0.02
11.53	0.0002	-0.22	0.19	0.00	0.00	-0.03
11.54	0.0003	-0.26	0.21	0.00	0.00	-0.04
11.55	0.0004	-0.29	0.24	0.00	0.00	-0.05
11.56	0.0004	-0.33	0.27	0.00	0.00	-0.07
11.57	0.0005	-0.39	0.31	0.00	0.00	-0.08
11.58	0.0006	-0.44	0.36	0.00	0.00	-0.09
11.59	0.0007	-0.50	0.40	0.00	0.00	-0.10
11.60	0.0007	-0.55	0.45	0.00	0.00	-0.11
11.61	0.0008	-0.61	0.49	0.00	0.00	-0.12
11.62	0.0009	-0.67	0.54	0.00	0.00	-0.13
11.63	0.0010	-0.72	0.58	0.00	0.00	-0.14
11.64	0.0010	-0.78	0.63	0.00	0.00	-0.15
11.65	0.0011	-0.83	0.67	0.00	0.00	-0.16
11.66	0.0012	-0.89	0.72	0.00	0.00	-0.17
11.67	0.0013	-0.94	0.76	0.00	0.00	-0.18
11.68	0.0013	-1.00	0.81	0.00	0.00	-0.19
11.69	0.0014	-1.05	0.86	0.00	0.00	-0.20
11.70	0.0015	-1.11	0.90	0.00	0.00	-0.21
11.71	0.0016	-1.17	0.95	0.00	0.00	-0.22

11.72	0.0016	-1.22	0.99	0.00	0.00	-0.23
11.73	0.0017	-1.28	1.04	0.00	0.00	-0.24
11.74	0.0018	-1.33	1.08	0.00	0.00	-0.25
11.75	0.0019	-1.39	1.13	0.00	0.00	-0.27
11.76	0.0019	-1.44	1.17	0.00	0.00	-0.28
11.77	0.0020	-1.50	1.22	0.00	0.00	-0.29
11.78	0.0021	-1.55	1.26	0.00	0.00	-0.30
11.79	0.0022	-1.61	1.31	0.00	0.00	-0.31
11.80	0.0022	-1.67	1.35	0.00	0.00	-0.32
11.81	0.0023	-1.72	1.40	0.00	0.00	-0.33
11.82	0.0024	-1.78	1.44	0.00	0.00	-0.34
11.83	0.0025	-1.83	1.49	0.00	0.00	-0.35
11.84	0.0025	-1.89	1.53	0.00	0.00	-0.36
11.85	0.0026	-1.94	1.58	0.00	0.00	-0.37
11.86	0.0027	-2.00	1.62	0.00	0.00	-0.38
11.87	0.0028	-2.05	1.67	0.00	0.00	-0.39
11.88	0.0028	-2.11	1.71	0.00	0.00	-0.40
11.89	0.0029	-2.16	1.76	0.00	0.00	-0.41
11.90	0.0030	-2.22	1.80	0.00	0.00	-0.42
11.91	0.0031	-2.28	1.85	0.00	0.00	-0.43
11.92	0.0031	-2.33	1.89	0.00	0.00	-0.44
11.93	0.0032	-2.39	1.94	0.00	0.00	-0.46
11.94	0.0033	-2.44	1.98	0.00	0.00	-0.47
11.95	0.0034	-2.50	2.03	0.00	0.00	-0.48
11.96	0.0034	-2.55	2.07	0.00	0.00	-0.49
11.97	0.0035	-2.61	2.12	0.00	0.00	-0.50
11.98	0.0036	-2.66	2.16	0.00	0.00	-0.51
11.99	0.0037	-2.72	2.21	0.00	0.00	-0.52
12.00	0.0037	-2.78	2.25	0.00	0.00	-0.53
12.01	0.0037	-2.73	2.22	0.00	0.00	-0.52
12.02	0.0036	-2.64	2.14	0.00	0.00	-0.51
12.03	0.0035	-2.59	2.10	0.00	0.00	-0.49
12.04	0.0034	-2.53	2.05	0.00	0.00	-0.48
12.05	0.0033	-2.46	2.00	0.00	0.00	-0.47
12.06	0.0032	-2.40	1.95	0.00	0.00	-0.46
12.07	0.0032	-2.34	1.90	0.00	0.00	-0.44
12.08	0.0031	-2.27	1.85	0.00	0.00	-0.43
12.09	0.0030	-2.21	1.79	0.00	0.00	-0.42
12.10	0.0029	-2.15	1.74	0.00	0.00	-0.41
12.11	0.0028	-2.09	1.69	0.00	0.00	-0.40
12.12	0.0027	-2.02	1.64	0.00	0.00	-0.39
12.13	0.0026	-1.96	1.59	0.00	0.00	-0.37
12.14	0.0026	-1.90	1.54	0.00	0.00	-0.36
12.15	0.0025	-1.84	1.49	0.00	0.00	-0.35
12.16	0.0024	-1.77	1.44	0.00	0.00	-0.34
12.17	0.0023	-1.71	1.39	0.00	0.00	-0.33
12.18	0.0022	-1.65	1.34	0.00	0.00	-0.31
12.19	0.0021	-1.58	1.28	0.00	0.00	-0.30
12.20	0.0021	-1.52	1.23	0.00	0.00	-0.29
12.21	0.0020	-1.46	1.18	0.00	0.00	-0.28
12.22	0.0019	-1.40	1.13	0.00	0.00	-0.27
12.23	0.0018	-1.33	1.08	0.00	0.00	-0.25
12.24	0.0017	-1.27	1.03	0.00	0.00	-0.24
12.25	0.0016	-1.21	0.98	0.00	0.00	-0.23
12.26	0.0015	-1.15	0.93	0.00	0.00	-0.22
12.27	0.0015	-1.08	0.88	0.00	0.00	-0.21
12.28	0.0014	-1.02	0.83	0.00	0.00	-0.19

12.29	0.0013	-0.96	0.78	0.00	0.00	-0.18
12.30	0.0012	-0.89	0.72	0.00	0.00	-0.17
12.31	0.0011	-0.83	0.67	0.00	0.00	-0.16
12.32	0.0010	-0.77	0.62	0.00	0.00	-0.15
12.33	0.0010	-0.71	0.57	0.00	0.00	-0.14
12.34	0.0009	-0.64	0.52	0.00	0.00	-0.13
12.35	0.0008	-0.58	0.47	0.00	0.00	-0.11
12.36	0.0007	-0.52	0.42	0.00	0.00	-0.10
12.37	0.0006	-0.45	0.37	0.00	0.00	-0.09
12.38	0.0005	-0.39	0.32	0.00	0.00	-0.08
12.39	0.0004	-0.33	0.27	0.00	0.00	-0.06
12.40	0.0004	-0.28	0.23	0.00	0.00	-0.05
12.41	0.0003	-0.24	0.21	0.00	0.00	-0.04
12.42	0.0002	-0.21	0.18	0.00	0.00	-0.03
12.43	0.0001	-0.17	0.16	0.00	0.00	-0.02
12.44	0.0000	-0.16	0.15	0.00	0.00	-0.01
12.45	-0.0001	-0.15	0.16	0.00	0.00	0.01
12.46	-0.0001	-0.17	0.19	0.00	0.00	0.02
12.47	-0.0002	-0.19	0.23	0.00	0.00	0.03
12.48	-0.0003	-0.22	0.26	0.00	0.00	0.04
12.49	-0.0004	-0.24	0.30	0.00	0.00	0.06
12.50	-0.0005	-0.29	0.36	0.00	0.00	0.07
12.51	-0.0006	-0.34	0.42	0.00	0.00	0.08
12.52	-0.0007	-0.39	0.48	0.00	0.00	0.09
12.53	-0.0007	-0.44	0.55	0.00	0.00	0.10
12.54	-0.0008	-0.49	0.61	0.00	0.00	0.11
12.55	-0.0009	-0.54	0.67	0.00	0.00	0.13
12.56	-0.0010	-0.60	0.74	0.00	0.00	0.14
12.57	-0.0011	-0.65	0.80	0.00	0.00	0.15
12.58	-0.0012	-0.70	0.86	0.00	0.00	0.16
12.59	-0.0012	-0.75	0.92	0.00	0.00	0.17
12.60	-0.0013	-0.80	0.99	0.00	0.00	0.19
12.61	-0.0014	-0.85	1.05	0.00	0.00	0.20
12.62	-0.0015	-0.90	1.11	0.00	0.00	0.21
12.63	-0.0016	-0.95	1.17	0.00	0.00	0.22
12.64	-0.0017	-1.00	1.24	0.00	0.00	0.23
12.65	-0.0018	-1.05	1.30	0.00	0.00	0.24
12.66	-0.0018	-1.11	1.36	0.00	0.00	0.25
12.67	-0.0019	-1.16	1.43	0.00	0.00	0.27
12.68	-0.0020	-1.21	1.49	0.00	0.00	0.28
12.69	-0.0021	-1.26	1.55	0.00	0.00	0.29
12.70	-0.0022	-1.31	1.61	0.00	0.00	0.30
12.71	-0.0023	-1.36	1.68	0.00	0.00	0.31
12.72	-0.0023	-1.41	1.74	0.00	0.00	0.32
12.73	-0.0024	-1.46	1.80	0.00	0.00	0.34
12.74	-0.0025	-1.51	1.86	0.00	0.00	0.35
12.75	-0.0026	-1.56	1.93	0.00	0.00	0.36
12.76	-0.0027	-1.61	1.99	0.00	0.00	0.37
12.77	-0.0028	-1.67	2.05	0.00	0.00	0.38
12.78	-0.0029	-1.72	2.12	0.00	0.00	0.39
12.79	-0.0029	-1.77	2.18	0.00	0.00	0.41
12.80	-0.0030	-1.82	2.24	0.00	0.00	0.42
12.81	-0.0031	-1.87	2.30	0.00	0.00	0.43
12.82	-0.0032	-1.92	2.37	0.00	0.00	0.44
12.83	-0.0033	-1.97	2.43	0.00	0.00	0.45
12.84	-0.0034	-2.02	2.49	0.00	0.00	0.46
12.85	-0.0034	-2.07	2.55	0.00	0.00	0.48

12.86	-0.0035	-2.12	2.62	0.00	0.00	0.49
12.87	-0.0036	-2.18	2.68	0.00	0.00	0.50
12.88	-0.0037	-2.23	2.74	0.00	0.00	0.51
12.89	-0.0038	-2.28	2.81	0.00	0.00	0.52
12.90	-0.0039	-2.33	2.87	0.00	0.00	0.54
12.91	-0.0040	-2.35	2.92	0.00	0.00	0.56
12.92	-0.0041	-2.37	2.97	0.00	0.00	0.60
12.93	-0.0042	-2.38	3.02	0.00	0.00	0.64
12.94	-0.0043	-2.38	3.07	0.00	0.00	0.68
12.95	-0.0044	-2.37	3.11	0.00	0.00	0.74
12.96	-0.0045	-2.35	3.15	0.00	0.00	0.79
12.97	-0.0046	-2.33	3.19	0.00	0.00	0.85
12.98	-0.0048	-2.31	3.23	0.00	0.00	0.91
12.99	-0.0049	-2.28	3.26	0.00	0.00	0.98
13.00	-0.0050	-2.25	3.30	0.00	0.00	1.04
13.01	-0.0049	-2.29	3.28	0.00	0.00	0.99
13.02	-0.0047	-2.32	3.21	0.00	0.00	0.89
13.03	-0.0046	-2.34	3.18	0.00	0.00	0.83
13.04	-0.0045	-2.36	3.14	0.00	0.00	0.77
13.05	-0.0043	-2.37	3.08	0.00	0.00	0.71
13.06	-0.0042	-2.38	3.04	0.00	0.00	0.65
13.07	-0.0041	-2.37	2.98	0.00	0.00	0.60
13.08	-0.0040	-2.36	2.93	0.00	0.00	0.56
13.09	-0.0039	-2.32	2.86	0.00	0.00	0.54
13.10	-0.0038	-2.27	2.80	0.00	0.00	0.52
13.11	-0.0037	-2.21	2.73	0.00	0.00	0.51
13.12	-0.0036	-2.16	2.66	0.00	0.00	0.49
13.13	-0.0035	-2.10	2.59	0.00	0.00	0.48
13.14	-0.0034	-2.04	2.52	0.00	0.00	0.47
13.15	-0.0033	-1.99	2.45	0.00	0.00	0.46
13.16	-0.0032	-1.93	2.38	0.00	0.00	0.44
13.17	-0.0031	-1.87	2.31	0.00	0.00	0.43
13.18	-0.0030	-1.81	2.24	0.00	0.00	0.42
13.19	-0.0029	-1.76	2.17	0.00	0.00	0.40
13.20	-0.0028	-1.70	2.10	0.00	0.00	0.39
13.21	-0.0027	-1.64	2.03	0.00	0.00	0.38
13.22	-0.0026	-1.59	1.96	0.00	0.00	0.37
13.23	-0.0025	-1.53	1.89	0.00	0.00	0.35
13.24	-0.0025	-1.47	1.82	0.00	0.00	0.34
13.25	-0.0024	-1.42	1.75	0.00	0.00	0.33
13.26	-0.0023	-1.36	1.68	0.00	0.00	0.31
13.27	-0.0022	-1.30	1.61	0.00	0.00	0.30
13.28	-0.0021	-1.25	1.54	0.00	0.00	0.29
13.29	-0.0020	-1.19	1.47	0.00	0.00	0.27
13.30	-0.0019	-1.13	1.40	0.00	0.00	0.26
13.31	-0.0018	-1.08	1.33	0.00	0.00	0.25
13.32	-0.0017	-1.02	1.26	0.00	0.00	0.24
13.33	-0.0016	-0.96	1.19	0.00	0.00	0.22
13.34	-0.0015	-0.91	1.12	0.00	0.00	0.21
13.35	-0.0014	-0.85	1.05	0.00	0.00	0.20
13.36	-0.0013	-0.79	0.98	0.00	0.00	0.18
13.37	-0.0012	-0.74	0.91	0.00	0.00	0.17
13.38	-0.0011	-0.68	0.84	0.00	0.00	0.16
13.39	-0.0010	-0.62	0.77	0.00	0.00	0.14
13.40	-0.0009	-0.57	0.70	0.00	0.00	0.13
13.41	-0.0008	-0.51	0.63	0.00	0.00	0.12
13.42	-0.0008	-0.45	0.56	0.00	0.00	0.10

13.43	-0.0007	-0.39	0.49	0.00	0.00	0.09
13.44	-0.0006	-0.34	0.42	0.00	0.00	0.08
13.45	-0.0005	-0.28	0.35	0.00	0.00	0.07
13.46	-0.0004	-0.24	0.29	0.00	0.00	0.05
13.47	-0.0003	-0.21	0.25	0.00	0.00	0.04
13.48	-0.0002	-0.18	0.21	0.00	0.00	0.03
13.49	-0.0001	-0.15	0.16	0.00	0.00	0.01
13.50	0.0000	-0.16	0.16	0.00	0.00	0.00
13.51	0.0001	-0.16	0.15	0.00	0.00	-0.01
13.52	0.0002	-0.21	0.18	0.00	0.00	-0.03
13.53	0.0003	-0.25	0.21	0.00	0.00	-0.04
13.54	0.0004	-0.29	0.24	0.00	0.00	-0.05
13.55	0.0005	-0.35	0.28	0.00	0.00	-0.07
13.56	0.0006	-0.42	0.34	0.00	0.00	-0.08
13.57	0.0007	-0.49	0.39	0.00	0.00	-0.10
13.58	0.0008	-0.56	0.45	0.00	0.00	-0.11
13.59	0.0008	-0.63	0.51	0.00	0.00	-0.12
13.60	0.0009	-0.70	0.57	0.00	0.00	-0.13
13.61	0.0010	-0.77	0.62	0.00	0.00	-0.15
13.62	0.0011	-0.84	0.68	0.00	0.00	-0.16
13.63	0.0012	-0.91	0.74	0.00	0.00	-0.17
13.64	0.0013	-0.98	0.79	0.00	0.00	-0.19
13.65	0.0014	-1.05	0.85	0.00	0.00	-0.20
13.66	0.0015	-1.12	0.91	0.00	0.00	-0.22
13.67	0.0016	-1.19	0.96	0.00	0.00	-0.23
13.68	0.0017	-1.26	1.02	0.00	0.00	-0.24
13.69	0.0018	-1.33	1.08	0.00	0.00	-0.25
13.70	0.0019	-1.40	1.13	0.00	0.00	-0.27
13.71	0.0020	-1.47	1.19	0.00	0.00	-0.28
13.72	0.0021	-1.54	1.25	0.00	0.00	-0.29
13.73	0.0022	-1.61	1.30	0.00	0.00	-0.31
13.74	0.0023	-1.68	1.36	0.00	0.00	-0.32
13.75	0.0024	-1.75	1.42	0.00	0.00	-0.33
13.76	0.0025	-1.82	1.47	0.00	0.00	-0.35
13.77	0.0025	-1.89	1.53	0.00	0.00	-0.36
13.78	0.0026	-1.96	1.59	0.00	0.00	-0.37
13.79	0.0027	-2.03	1.64	0.00	0.00	-0.39
13.80	0.0028	-2.10	1.70	0.00	0.00	-0.40
13.81	0.0029	-2.17	1.76	0.00	0.00	-0.41
13.82	0.0030	-2.24	1.81	0.00	0.00	-0.43
13.83	0.0031	-2.31	1.87	0.00	0.00	-0.44
13.84	0.0032	-2.38	1.93	0.00	0.00	-0.45
13.85	0.0033	-2.45	1.99	0.00	0.00	-0.47
13.86	0.0034	-2.52	2.04	0.00	0.00	-0.48
13.87	0.0035	-2.59	2.10	0.00	0.00	-0.49
13.88	0.0036	-2.66	2.16	0.00	0.00	-0.51
13.89	0.0037	-2.73	2.21	0.00	0.00	-0.52
13.90	0.0038	-2.80	2.27	0.00	0.00	-0.53
13.91	0.0039	-2.87	2.32	0.00	0.00	-0.55
13.92	0.0040	-2.93	2.35	0.00	0.00	-0.58
13.93	0.0041	-2.98	2.37	0.00	0.00	-0.62
13.94	0.0042	-3.04	2.38	0.00	0.00	-0.67
13.95	0.0043	-3.09	2.37	0.00	0.00	-0.72
13.96	0.0045	-3.13	2.36	0.00	0.00	-0.78
13.97	0.0046	-3.18	2.34	0.00	0.00	-0.84
13.98	0.0047	-3.22	2.31	0.00	0.00	-0.91
13.99	0.0049	-3.26	2.28	0.00	0.00	-0.98

14.00	0.0050	-3.30	2.25	0.00	0.00	-1.06
14.01	0.0049	-3.28	2.29	0.00	0.00	-1.00
14.02	0.0047	-3.21	2.32	0.00	0.00	-0.90
14.03	0.0046	-3.18	2.34	0.00	0.00	-0.84
14.04	0.0045	-3.14	2.36	0.00	0.00	-0.78
14.05	0.0043	-3.08	2.37	0.00	0.00	-0.72
14.06	0.0042	-3.04	2.38	0.00	0.00	-0.66
14.07	0.0041	-2.98	2.37	0.00	0.00	-0.62
14.08	0.0040	-2.93	2.36	0.00	0.00	-0.58
14.09	0.0039	-2.86	2.32	0.00	0.00	-0.55
14.10	0.0038	-2.80	2.27	0.00	0.00	-0.53
14.11	0.0037	-2.73	2.21	0.00	0.00	-0.52
14.12	0.0036	-2.66	2.16	0.00	0.00	-0.51
14.13	0.0035	-2.59	2.10	0.00	0.00	-0.49
14.14	0.0034	-2.52	2.04	0.00	0.00	-0.48
14.15	0.0033	-2.45	1.99	0.00	0.00	-0.47
14.16	0.0032	-2.38	1.93	0.00	0.00	-0.45
14.17	0.0031	-2.31	1.87	0.00	0.00	-0.44
14.18	0.0030	-2.24	1.81	0.00	0.00	-0.43
14.19	0.0029	-2.17	1.76	0.00	0.00	-0.41
14.20	0.0028	-2.10	1.70	0.00	0.00	-0.40
14.21	0.0027	-2.03	1.64	0.00	0.00	-0.39
14.22	0.0026	-1.96	1.59	0.00	0.00	-0.37
14.23	0.0025	-1.89	1.53	0.00	0.00	-0.36
14.24	0.0025	-1.82	1.47	0.00	0.00	-0.35
14.25	0.0024	-1.75	1.42	0.00	0.00	-0.33
14.26	0.0023	-1.68	1.36	0.00	0.00	-0.32
14.27	0.0022	-1.61	1.30	0.00	0.00	-0.31
14.28	0.0021	-1.54	1.25	0.00	0.00	-0.29
14.29	0.0020	-1.47	1.19	0.00	0.00	-0.28
14.30	0.0019	-1.40	1.13	0.00	0.00	-0.27
14.31	0.0018	-1.33	1.08	0.00	0.00	-0.25
14.32	0.0017	-1.26	1.02	0.00	0.00	-0.24
14.33	0.0016	-1.19	0.96	0.00	0.00	-0.23
14.34	0.0015	-1.12	0.91	0.00	0.00	-0.22
14.35	0.0014	-1.05	0.85	0.00	0.00	-0.20
14.36	0.0013	-0.98	0.79	0.00	0.00	-0.19
14.37	0.0012	-0.91	0.74	0.00	0.00	-0.17
14.38	0.0011	-0.84	0.68	0.00	0.00	-0.16
14.39	0.0010	-0.77	0.62	0.00	0.00	-0.15
14.40	0.0009	-0.70	0.57	0.00	0.00	-0.13
14.41	0.0008	-0.63	0.51	0.00	0.00	-0.12
14.42	0.0008	-0.56	0.45	0.00	0.00	-0.11
14.43	0.0007	-0.49	0.39	0.00	0.00	-0.10
14.44	0.0006	-0.42	0.34	0.00	0.00	-0.08
14.45	0.0005	-0.35	0.28	0.00	0.00	-0.07
14.46	0.0004	-0.29	0.24	0.00	0.00	-0.05
14.47	0.0003	-0.25	0.21	0.00	0.00	-0.04
14.48	0.0002	-0.21	0.18	0.00	0.00	-0.03
14.49	0.0001	-0.16	0.15	0.00	0.00	-0.01
14.50	0.0000	-0.16	0.16	0.00	0.00	0.00
14.51	-0.0001	-0.15	0.16	0.00	0.00	0.01
14.52	-0.0002	-0.18	0.21	0.00	0.00	0.03
14.53	-0.0003	-0.21	0.25	0.00	0.00	0.04
14.54	-0.0004	-0.24	0.29	0.00	0.00	0.05
14.55	-0.0005	-0.28	0.35	0.00	0.00	0.07
14.56	-0.0006	-0.34	0.42	0.00	0.00	0.08

14.57	-0.0007	-0.39	0.49	0.00	0.00	0.09
14.58	-0.0008	-0.45	0.56	0.00	0.00	0.10
14.59	-0.0008	-0.51	0.63	0.00	0.00	0.12
14.60	-0.0009	-0.57	0.70	0.00	0.00	0.13
14.61	-0.0010	-0.62	0.77	0.00	0.00	0.14
14.62	-0.0011	-0.68	0.84	0.00	0.00	0.16
14.63	-0.0012	-0.74	0.91	0.00	0.00	0.17
14.64	-0.0013	-0.79	0.98	0.00	0.00	0.18
14.65	-0.0014	-0.85	1.05	0.00	0.00	0.20
14.66	-0.0015	-0.91	1.12	0.00	0.00	0.21
14.67	-0.0016	-0.96	1.19	0.00	0.00	0.22
14.68	-0.0017	-1.02	1.26	0.00	0.00	0.24
14.69	-0.0018	-1.08	1.33	0.00	0.00	0.25
14.70	-0.0019	-1.13	1.40	0.00	0.00	0.26
14.71	-0.0020	-1.19	1.47	0.00	0.00	0.27
14.72	-0.0021	-1.25	1.54	0.00	0.00	0.29
14.73	-0.0022	-1.30	1.61	0.00	0.00	0.30
14.74	-0.0023	-1.36	1.68	0.00	0.00	0.31
14.75	-0.0024	-1.42	1.75	0.00	0.00	0.33
14.76	-0.0025	-1.47	1.82	0.00	0.00	0.34
14.77	-0.0025	-1.53	1.89	0.00	0.00	0.35
14.78	-0.0026	-1.59	1.96	0.00	0.00	0.37
14.79	-0.0027	-1.64	2.03	0.00	0.00	0.38
14.80	-0.0028	-1.70	2.10	0.00	0.00	0.39
14.81	-0.0029	-1.76	2.17	0.00	0.00	0.40
14.82	-0.0030	-1.81	2.24	0.00	0.00	0.42
14.83	-0.0031	-1.87	2.31	0.00	0.00	0.43
14.84	-0.0032	-1.93	2.38	0.00	0.00	0.44
14.85	-0.0033	-1.99	2.45	0.00	0.00	0.46
14.86	-0.0034	-2.04	2.52	0.00	0.00	0.47
14.87	-0.0035	-2.10	2.59	0.00	0.00	0.48
14.88	-0.0036	-2.16	2.66	0.00	0.00	0.49
14.89	-0.0037	-2.21	2.73	0.00	0.00	0.51
14.90	-0.0038	-2.27	2.80	0.00	0.00	0.52
14.91	-0.0039	-2.32	2.87	0.00	0.00	0.54
14.92	-0.0040	-2.35	2.93	0.00	0.00	0.56
14.93	-0.0041	-2.37	2.98	0.00	0.00	0.61
14.94	-0.0042	-2.38	3.04	0.00	0.00	0.65
14.95	-0.0043	-2.37	3.09	0.00	0.00	0.71
14.96	-0.0045	-2.36	3.13	0.00	0.00	0.77
14.97	-0.0046	-2.34	3.18	0.00	0.00	0.83
14.98	-0.0047	-2.31	3.22	0.00	0.00	0.90
14.99	-0.0049	-2.28	3.26	0.00	0.00	0.97
15.00	-0.0050	-2.25	3.30	0.00	0.00	1.04
15.01	-0.0049	-2.29	3.28	0.00	0.00	0.99
15.02	-0.0047	-2.32	3.21	0.00	0.00	0.89
15.03	-0.0046	-2.34	3.18	0.00	0.00	0.83
15.04	-0.0045	-2.36	3.14	0.00	0.00	0.77
15.05	-0.0043	-2.37	3.08	0.00	0.00	0.71
15.06	-0.0042	-2.38	3.04	0.00	0.00	0.65
15.07	-0.0041	-2.37	2.98	0.00	0.00	0.60
15.08	-0.0040	-2.36	2.93	0.00	0.00	0.56
15.09	-0.0039	-2.32	2.86	0.00	0.00	0.54
15.10	-0.0038	-2.27	2.80	0.00	0.00	0.52
15.11	-0.0037	-2.21	2.73	0.00	0.00	0.51
15.12	-0.0036	-2.16	2.66	0.00	0.00	0.49
15.13	-0.0035	-2.10	2.59	0.00	0.00	0.48

15.14	-0.0034	-2.04	2.52	0.00	0.00	0.47
15.15	-0.0033	-1.99	2.45	0.00	0.00	0.46
15.16	-0.0032	-1.93	2.38	0.00	0.00	0.44
15.17	-0.0031	-1.87	2.31	0.00	0.00	0.43
15.18	-0.0030	-1.81	2.24	0.00	0.00	0.42
15.19	-0.0029	-1.76	2.17	0.00	0.00	0.40
15.20	-0.0028	-1.70	2.10	0.00	0.00	0.39
15.21	-0.0027	-1.64	2.03	0.00	0.00	0.38
15.22	-0.0026	-1.59	1.96	0.00	0.00	0.37
15.23	-0.0025	-1.53	1.89	0.00	0.00	0.35
15.24	-0.0025	-1.47	1.82	0.00	0.00	0.34
15.25	-0.0024	-1.42	1.75	0.00	0.00	0.33
15.26	-0.0023	-1.36	1.68	0.00	0.00	0.31
15.27	-0.0022	-1.30	1.61	0.00	0.00	0.30
15.28	-0.0021	-1.25	1.54	0.00	0.00	0.29
15.29	-0.0020	-1.19	1.47	0.00	0.00	0.27
15.30	-0.0019	-1.13	1.40	0.00	0.00	0.26
15.31	-0.0018	-1.08	1.33	0.00	0.00	0.25
15.32	-0.0017	-1.02	1.26	0.00	0.00	0.24
15.33	-0.0016	-0.96	1.19	0.00	0.00	0.22
15.34	-0.0015	-0.91	1.12	0.00	0.00	0.21
15.35	-0.0014	-0.85	1.05	0.00	0.00	0.20
15.36	-0.0013	-0.79	0.98	0.00	0.00	0.18
15.37	-0.0012	-0.74	0.91	0.00	0.00	0.17
15.38	-0.0011	-0.68	0.84	0.00	0.00	0.16
15.39	-0.0010	-0.62	0.77	0.00	0.00	0.14
15.40	-0.0009	-0.57	0.70	0.00	0.00	0.13
15.41	-0.0008	-0.51	0.63	0.00	0.00	0.12
15.42	-0.0008	-0.45	0.56	0.00	0.00	0.10
15.43	-0.0007	-0.39	0.49	0.00	0.00	0.09
15.44	-0.0006	-0.34	0.42	0.00	0.00	0.08
15.45	-0.0005	-0.28	0.35	0.00	0.00	0.07
15.46	-0.0004	-0.24	0.29	0.00	0.00	0.05
15.47	-0.0003	-0.21	0.25	0.00	0.00	0.04
15.48	-0.0002	-0.18	0.21	0.00	0.00	0.03
15.49	-0.0001	-0.15	0.16	0.00	0.00	0.01
15.50	0.0000	-0.16	0.16	0.00	0.00	0.00
15.51	0.0001	-0.16	0.15	0.00	0.00	-0.01
15.52	0.0002	-0.21	0.18	0.00	0.00	-0.03
15.53	0.0003	-0.25	0.21	0.00	0.00	-0.04
15.54	0.0004	-0.29	0.24	0.00	0.00	-0.05
15.55	0.0005	-0.35	0.28	0.00	0.00	-0.07
15.56	0.0006	-0.42	0.34	0.00	0.00	-0.08
15.57	0.0007	-0.49	0.39	0.00	0.00	-0.10
15.58	0.0008	-0.56	0.45	0.00	0.00	-0.11
15.59	0.0008	-0.63	0.51	0.00	0.00	-0.12
15.60	0.0009	-0.70	0.57	0.00	0.00	-0.13
15.61	0.0010	-0.77	0.62	0.00	0.00	-0.15
15.62	0.0011	-0.84	0.68	0.00	0.00	-0.16
15.63	0.0012	-0.91	0.74	0.00	0.00	-0.17
15.64	0.0013	-0.98	0.79	0.00	0.00	-0.19
15.65	0.0014	-1.05	0.85	0.00	0.00	-0.20
15.66	0.0015	-1.12	0.91	0.00	0.00	-0.22
15.67	0.0016	-1.19	0.96	0.00	0.00	-0.23
15.68	0.0017	-1.26	1.02	0.00	0.00	-0.24
15.69	0.0018	-1.33	1.08	0.00	0.00	-0.25
15.70	0.0019	-1.40	1.13	0.00	0.00	-0.27

15.71	0.0020	-1.47	1.19	0.00	0.00	-0.28
15.72	0.0021	-1.54	1.25	0.00	0.00	-0.29
15.73	0.0022	-1.61	1.30	0.00	0.00	-0.31
15.74	0.0023	-1.68	1.36	0.00	0.00	-0.32
15.75	0.0024	-1.75	1.42	0.00	0.00	-0.33
15.76	0.0025	-1.82	1.47	0.00	0.00	-0.35
15.77	0.0025	-1.89	1.53	0.00	0.00	-0.36
15.78	0.0026	-1.96	1.59	0.00	0.00	-0.37
15.79	0.0027	-2.03	1.64	0.00	0.00	-0.39
15.80	0.0028	-2.10	1.70	0.00	0.00	-0.40
15.81	0.0029	-2.17	1.76	0.00	0.00	-0.41
15.82	0.0030	-2.24	1.81	0.00	0.00	-0.43
15.83	0.0031	-2.31	1.87	0.00	0.00	-0.44
15.84	0.0032	-2.38	1.93	0.00	0.00	-0.45
15.85	0.0033	-2.45	1.99	0.00	0.00	-0.47
15.86	0.0034	-2.52	2.04	0.00	0.00	-0.48
15.87	0.0035	-2.59	2.10	0.00	0.00	-0.49
15.88	0.0036	-2.66	2.16	0.00	0.00	-0.51
15.89	0.0037	-2.73	2.21	0.00	0.00	-0.52
15.90	0.0038	-2.80	2.27	0.00	0.00	-0.53
15.91	0.0039	-2.87	2.32	0.00	0.00	-0.55
15.92	0.0040	-2.93	2.35	0.00	0.00	-0.58
15.93	0.0041	-2.98	2.37	0.00	0.00	-0.62
15.94	0.0042	-3.04	2.38	0.00	0.00	-0.67
15.95	0.0043	-3.09	2.37	0.00	0.00	-0.72
15.96	0.0045	-3.13	2.36	0.00	0.00	-0.78
15.97	0.0046	-3.18	2.34	0.00	0.00	-0.84
15.98	0.0047	-3.22	2.31	0.00	0.00	-0.91
15.99	0.0049	-3.26	2.28	0.00	0.00	-0.98
16.00	0.0050	-3.30	2.25	0.00	0.00	-1.06
16.01	0.0049	-3.28	2.29	0.00	0.00	-1.00
16.02	0.0047	-3.21	2.32	0.00	0.00	-0.90
16.03	0.0046	-3.18	2.34	0.00	0.00	-0.84
16.04	0.0045	-3.14	2.36	0.00	0.00	-0.78
16.05	0.0043	-3.09	2.37	0.00	0.00	-0.72
16.06	0.0042	-3.04	2.38	0.00	0.00	-0.66
16.07	0.0041	-2.98	2.37	0.00	0.00	-0.62
16.08	0.0040	-2.93	2.36	0.00	0.00	-0.58
16.09	0.0039	-2.86	2.32	0.00	0.00	-0.55
16.10	0.0038	-2.80	2.27	0.00	0.00	-0.53
16.11	0.0037	-2.73	2.21	0.00	0.00	-0.52
16.12	0.0036	-2.66	2.16	0.00	0.00	-0.51
16.13	0.0035	-2.59	2.10	0.00	0.00	-0.49
16.14	0.0034	-2.52	2.04	0.00	0.00	-0.48
16.15	0.0033	-2.45	1.99	0.00	0.00	-0.47
16.16	0.0032	-2.38	1.93	0.00	0.00	-0.45
16.17	0.0031	-2.31	1.87	0.00	0.00	-0.44
16.18	0.0030	-2.24	1.81	0.00	0.00	-0.43
16.19	0.0029	-2.17	1.76	0.00	0.00	-0.41
16.20	0.0028	-2.10	1.70	0.00	0.00	-0.40
16.21	0.0027	-2.03	1.64	0.00	0.00	-0.39
16.22	0.0026	-1.96	1.59	0.00	0.00	-0.37
16.23	0.0025	-1.89	1.53	0.00	0.00	-0.36
16.24	0.0025	-1.82	1.47	0.00	0.00	-0.35
16.25	0.0024	-1.75	1.42	0.00	0.00	-0.33
16.26	0.0023	-1.68	1.36	0.00	0.00	-0.32
16.27	0.0022	-1.61	1.30	0.00	0.00	-0.31

16.28	0.0021	-1.54	1.25	0.00	0.00	-0.29
16.29	0.0020	-1.47	1.19	0.00	0.00	-0.28
16.30	0.0019	-1.40	1.13	0.00	0.00	-0.27
16.31	0.0018	-1.33	1.08	0.00	0.00	-0.25
16.32	0.0017	-1.26	1.02	0.00	0.00	-0.24
16.33	0.0016	-1.19	0.96	0.00	0.00	-0.23
16.34	0.0015	-1.12	0.91	0.00	0.00	-0.22
16.35	0.0014	-1.05	0.85	0.00	0.00	-0.20
16.36	0.0013	-0.98	0.79	0.00	0.00	-0.19
16.37	0.0012	-0.91	0.74	0.00	0.00	-0.17
16.38	0.0011	-0.84	0.68	0.00	0.00	-0.16
16.39	0.0010	-0.77	0.62	0.00	0.00	-0.15
16.40	0.0009	-0.70	0.57	0.00	0.00	-0.13
16.41	0.0008	-0.63	0.51	0.00	0.00	-0.12
16.42	0.0008	-0.56	0.45	0.00	0.00	-0.11
16.43	0.0007	-0.49	0.39	0.00	0.00	-0.10
16.44	0.0006	-0.42	0.34	0.00	0.00	-0.08
16.45	0.0005	-0.35	0.28	0.00	0.00	-0.07
16.46	0.0004	-0.29	0.24	0.00	0.00	-0.05
16.47	0.0003	-0.25	0.21	0.00	0.00	-0.04
16.48	0.0002	-0.21	0.18	0.00	0.00	-0.03
16.49	0.0001	-0.16	0.15	0.00	0.00	-0.01
16.50	0.0000	-0.16	0.16	0.00	0.00	0.00
16.51	-0.0001	-0.15	0.16	0.00	0.00	0.01
16.52	-0.0002	-0.18	0.21	0.00	0.00	0.03
16.53	-0.0003	-0.21	0.25	0.00	0.00	0.04
16.54	-0.0004	-0.24	0.29	0.00	0.00	0.05
16.55	-0.0005	-0.28	0.35	0.00	0.00	0.07
16.56	-0.0006	-0.34	0.42	0.00	0.00	0.08
16.57	-0.0007	-0.39	0.49	0.00	0.00	0.09
16.58	-0.0008	-0.45	0.56	0.00	0.00	0.10
16.59	-0.0008	-0.51	0.63	0.00	0.00	0.12
16.60	-0.0009	-0.57	0.70	0.00	0.00	0.13
16.61	-0.0010	-0.62	0.77	0.00	0.00	0.14
16.62	-0.0011	-0.68	0.84	0.00	0.00	0.16
16.63	-0.0012	-0.74	0.91	0.00	0.00	0.17
16.64	-0.0013	-0.79	0.98	0.00	0.00	0.18
16.65	-0.0014	-0.85	1.05	0.00	0.00	0.20
16.66	-0.0015	-0.91	1.12	0.00	0.00	0.21
16.67	-0.0016	-0.96	1.19	0.00	0.00	0.22
16.68	-0.0017	-1.02	1.26	0.00	0.00	0.24
16.69	-0.0018	-1.08	1.33	0.00	0.00	0.25
16.70	-0.0019	-1.13	1.40	0.00	0.00	0.26
16.71	-0.0020	-1.19	1.47	0.00	0.00	0.27
16.72	-0.0021	-1.25	1.54	0.00	0.00	0.29
16.73	-0.0022	-1.30	1.61	0.00	0.00	0.30
16.74	-0.0023	-1.36	1.68	0.00	0.00	0.31
16.75	-0.0024	-1.42	1.75	0.00	0.00	0.33
16.76	-0.0025	-1.47	1.82	0.00	0.00	0.34
16.77	-0.0025	-1.53	1.89	0.00	0.00	0.35
16.78	-0.0026	-1.59	1.96	0.00	0.00	0.37
16.79	-0.0027	-1.64	2.03	0.00	0.00	0.38
16.80	-0.0028	-1.70	2.10	0.00	0.00	0.39
16.81	-0.0029	-1.76	2.17	0.00	0.00	0.40
16.82	-0.0030	-1.81	2.24	0.00	0.00	0.42
16.83	-0.0031	-1.87	2.31	0.00	0.00	0.43
16.84	-0.0032	-1.93	2.38	0.00	0.00	0.44

16.85	-0.0033	-1.99	2.45	0.00	0.00	0.46
16.86	-0.0034	-2.04	2.52	0.00	0.00	0.47
16.87	-0.0035	-2.10	2.59	0.00	0.00	0.48
16.88	-0.0036	-2.16	2.66	0.00	0.00	0.49
16.89	-0.0037	-2.21	2.73	0.00	0.00	0.51
16.90	-0.0038	-2.27	2.80	0.00	0.00	0.52
16.91	-0.0039	-2.32	2.87	0.00	0.00	0.54
16.92	-0.0040	-2.35	2.93	0.00	0.00	0.56
16.93	-0.0041	-2.37	2.98	0.00	0.00	0.61
16.94	-0.0042	-2.38	3.04	0.00	0.00	0.65
16.95	-0.0043	-2.37	3.09	0.00	0.00	0.71
16.96	-0.0045	-2.36	3.13	0.00	0.00	0.77
16.97	-0.0046	-2.34	3.18	0.00	0.00	0.83
16.98	-0.0047	-2.31	3.22	0.00	0.00	0.90
16.99	-0.0049	-2.28	3.26	0.00	0.00	0.97
17.00	-0.0050	-2.25	3.30	0.00	0.00	1.04
17.01	-0.0049	-2.29	3.28	0.00	0.00	0.99
17.02	-0.0047	-2.32	3.21	0.00	0.00	0.89
17.03	-0.0046	-2.34	3.18	0.00	0.00	0.83
17.04	-0.0045	-2.36	3.14	0.00	0.00	0.77
17.05	-0.0043	-2.37	3.08	0.00	0.00	0.71
17.06	-0.0042	-2.38	3.04	0.00	0.00	0.65
17.07	-0.0041	-2.37	2.98	0.00	0.00	0.60
17.08	-0.0040	-2.36	2.93	0.00	0.00	0.56
17.09	-0.0039	-2.32	2.86	0.00	0.00	0.54
17.10	-0.0038	-2.27	2.80	0.00	0.00	0.52
17.11	-0.0037	-2.21	2.73	0.00	0.00	0.51
17.12	-0.0036	-2.16	2.66	0.00	0.00	0.49
17.13	-0.0035	-2.10	2.59	0.00	0.00	0.48
17.14	-0.0034	-2.04	2.52	0.00	0.00	0.47
17.15	-0.0033	-1.99	2.45	0.00	0.00	0.46
17.16	-0.0032	-1.93	2.38	0.00	0.00	0.44
17.17	-0.0031	-1.87	2.31	0.00	0.00	0.43
17.18	-0.0030	-1.81	2.24	0.00	0.00	0.42
17.19	-0.0029	-1.76	2.17	0.00	0.00	0.40
17.20	-0.0028	-1.70	2.10	0.00	0.00	0.39
17.21	-0.0027	-1.64	2.03	0.00	0.00	0.38
17.22	-0.0026	-1.59	1.96	0.00	0.00	0.37
17.23	-0.0025	-1.53	1.89	0.00	0.00	0.35
17.24	-0.0025	-1.47	1.82	0.00	0.00	0.34
17.25	-0.0024	-1.42	1.75	0.00	0.00	0.33
17.26	-0.0023	-1.36	1.68	0.00	0.00	0.31
17.27	-0.0022	-1.30	1.61	0.00	0.00	0.30
17.28	-0.0021	-1.25	1.54	0.00	0.00	0.29
17.29	-0.0020	-1.19	1.47	0.00	0.00	0.27
17.30	-0.0019	-1.13	1.40	0.00	0.00	0.26
17.31	-0.0018	-1.08	1.33	0.00	0.00	0.25
17.32	-0.0017	-1.02	1.26	0.00	0.00	0.24
17.33	-0.0016	-0.96	1.19	0.00	0.00	0.22
17.34	-0.0015	-0.91	1.12	0.00	0.00	0.21
17.35	-0.0014	-0.85	1.05	0.00	0.00	0.20
17.36	-0.0013	-0.79	0.98	0.00	0.00	0.18
17.37	-0.0012	-0.74	0.91	0.00	0.00	0.17
17.38	-0.0011	-0.68	0.84	0.00	0.00	0.16
17.39	-0.0010	-0.62	0.77	0.00	0.00	0.14
17.40	-0.0009	-0.57	0.70	0.00	0.00	0.13
17.41	-0.0008	-0.51	0.63	0.00	0.00	0.12

17.42	-0.0008	-0.45	0.56	0.00	0.00	0.10
17.43	-0.0007	-0.39	0.49	0.00	0.00	0.09
17.44	-0.0006	-0.34	0.42	0.00	0.00	0.08
17.45	-0.0005	-0.28	0.35	0.00	0.00	0.07
17.46	-0.0004	-0.24	0.29	0.00	0.00	0.05
17.47	-0.0003	-0.21	0.25	0.00	0.00	0.04
17.48	-0.0002	-0.18	0.21	0.00	0.00	0.03
17.49	-0.0001	-0.15	0.16	0.00	0.00	0.01
17.50	0.0000	-0.16	0.16	0.00	0.00	0.00
17.51	0.0001	-0.16	0.15	0.00	0.00	-0.01
17.52	0.0002	-0.21	0.18	0.00	0.00	-0.03
17.53	0.0003	-0.25	0.21	0.00	0.00	-0.04
17.54	0.0004	-0.29	0.24	0.00	0.00	-0.05
17.55	0.0005	-0.35	0.28	0.00	0.00	-0.07
17.56	0.0006	-0.42	0.34	0.00	0.00	-0.08
17.57	0.0007	-0.49	0.39	0.00	0.00	-0.10
17.58	0.0008	-0.56	0.45	0.00	0.00	-0.11
17.59	0.0008	-0.63	0.51	0.00	0.00	-0.12
17.60	0.0009	-0.70	0.57	0.00	0.00	-0.13
17.61	0.0010	-0.77	0.62	0.00	0.00	-0.15
17.62	0.0011	-0.84	0.68	0.00	0.00	-0.16
17.63	0.0012	-0.91	0.74	0.00	0.00	-0.17
17.64	0.0013	-0.98	0.79	0.00	0.00	-0.19
17.65	0.0014	-1.05	0.85	0.00	0.00	-0.20
17.66	0.0015	-1.12	0.91	0.00	0.00	-0.22
17.67	0.0016	-1.19	0.96	0.00	0.00	-0.23
17.68	0.0017	-1.26	1.02	0.00	0.00	-0.24
17.69	0.0018	-1.33	1.08	0.00	0.00	-0.25
17.70	0.0019	-1.40	1.13	0.00	0.00	-0.27
17.71	0.0020	-1.47	1.19	0.00	0.00	-0.28
17.72	0.0021	-1.54	1.25	0.00	0.00	-0.29
17.73	0.0022	-1.61	1.30	0.00	0.00	-0.31
17.74	0.0023	-1.68	1.36	0.00	0.00	-0.32
17.75	0.0024	-1.75	1.42	0.00	0.00	-0.33
17.76	0.0025	-1.82	1.47	0.00	0.00	-0.35
17.77	0.0025	-1.89	1.53	0.00	0.00	-0.36
17.78	0.0026	-1.96	1.59	0.00	0.00	-0.37
17.79	0.0027	-2.03	1.64	0.00	0.00	-0.39
17.80	0.0028	-2.10	1.70	0.00	0.00	-0.40
17.81	0.0029	-2.17	1.76	0.00	0.00	-0.41
17.82	0.0030	-2.24	1.81	0.00	0.00	-0.43
17.83	0.0031	-2.31	1.87	0.00	0.00	-0.44
17.84	0.0032	-2.38	1.93	0.00	0.00	-0.45
17.85	0.0033	-2.45	1.99	0.00	0.00	-0.47
17.86	0.0034	-2.52	2.04	0.00	0.00	-0.48
17.87	0.0035	-2.59	2.10	0.00	0.00	-0.49
17.88	0.0036	-2.66	2.16	0.00	0.00	-0.51
17.89	0.0037	-2.73	2.21	0.00	0.00	-0.52
17.90	0.0038	-2.80	2.27	0.00	0.00	-0.53
17.91	0.0039	-2.87	2.32	0.00	0.00	-0.55
17.92	0.0040	-2.93	2.35	0.00	0.00	-0.58
17.93	0.0041	-2.98	2.37	0.00	0.00	-0.62
17.94	0.0042	-3.04	2.38	0.00	0.00	-0.67
17.95	0.0043	-3.09	2.37	0.00	0.00	-0.72
17.96	0.0045	-3.13	2.36	0.00	0.00	-0.78
17.97	0.0046	-3.18	2.34	0.00	0.00	-0.84
17.98	0.0047	-3.22	2.31	0.00	0.00	-0.91

17.99	0.0049	-3.26	2.28	0.00	0.00	-0.98
18.00	0.0050	-3.30	2.25	0.00	0.00	-1.06
18.01	0.0049	-3.28	2.29	0.00	0.00	-1.00
18.02	0.0047	-3.21	2.32	0.00	0.00	-0.90
18.03	0.0046	-3.18	2.34	0.00	0.00	-0.84
18.04	0.0045	-3.14	2.36	0.00	0.00	-0.78
18.05	0.0043	-3.08	2.37	0.00	0.00	-0.72
18.06	0.0042	-3.04	2.38	0.00	0.00	-0.66
18.07	0.0041	-2.98	2.37	0.00	0.00	-0.62
18.08	0.0040	-2.93	2.36	0.00	0.00	-0.58
18.09	0.0039	-2.86	2.32	0.00	0.00	-0.55
18.10	0.0038	-2.80	2.27	0.00	0.00	-0.53
18.11	0.0037	-2.73	2.21	0.00	0.00	-0.52
18.12	0.0036	-2.66	2.16	0.00	0.00	-0.51
18.13	0.0035	-2.59	2.10	0.00	0.00	-0.49
18.14	0.0034	-2.52	2.04	0.00	0.00	-0.48
18.15	0.0033	-2.45	1.99	0.00	0.00	-0.47
18.16	0.0032	-2.38	1.93	0.00	0.00	-0.45
18.17	0.0031	-2.31	1.87	0.00	0.00	-0.44
18.18	0.0030	-2.24	1.81	0.00	0.00	-0.43
18.19	0.0029	-2.17	1.76	0.00	0.00	-0.41
18.20	0.0028	-2.10	1.70	0.00	0.00	-0.40
18.21	0.0027	-2.03	1.64	0.00	0.00	-0.39
18.22	0.0026	-1.96	1.59	0.00	0.00	-0.37
18.23	0.0025	-1.89	1.53	0.00	0.00	-0.36
18.24	0.0025	-1.82	1.47	0.00	0.00	-0.35
18.25	0.0024	-1.75	1.42	0.00	0.00	-0.33
18.26	0.0023	-1.68	1.36	0.00	0.00	-0.32
18.27	0.0022	-1.61	1.30	0.00	0.00	-0.31
18.28	0.0021	-1.54	1.25	0.00	0.00	-0.29
18.29	0.0020	-1.47	1.19	0.00	0.00	-0.28
18.30	0.0019	-1.40	1.13	0.00	0.00	-0.27
18.31	0.0018	-1.33	1.08	0.00	0.00	-0.25
18.32	0.0017	-1.26	1.02	0.00	0.00	-0.24
18.33	0.0016	-1.19	0.96	0.00	0.00	-0.23
18.34	0.0015	-1.12	0.91	0.00	0.00	-0.22
18.35	0.0014	-1.05	0.85	0.00	0.00	-0.20
18.36	0.0013	-0.98	0.79	0.00	0.00	-0.19
18.37	0.0012	-0.91	0.74	0.00	0.00	-0.17
18.38	0.0011	-0.84	0.68	0.00	0.00	-0.16
18.39	0.0010	-0.77	0.62	0.00	0.00	-0.15
18.40	0.0009	-0.70	0.57	0.00	0.00	-0.13
18.41	0.0008	-0.63	0.51	0.00	0.00	-0.12
18.42	0.0008	-0.56	0.45	0.00	0.00	-0.11
18.43	0.0007	-0.49	0.39	0.00	0.00	-0.10
18.44	0.0006	-0.42	0.34	0.00	0.00	-0.08
18.45	0.0005	-0.35	0.28	0.00	0.00	-0.07
18.46	0.0004	-0.29	0.24	0.00	0.00	-0.05
18.47	0.0003	-0.25	0.21	0.00	0.00	-0.04
18.48	0.0002	-0.21	0.18	0.00	0.00	-0.03
18.49	0.0001	-0.16	0.15	0.00	0.00	-0.01
18.50	0.0000	-0.16	0.16	0.00	0.00	0.00
18.51	-0.0001	-0.15	0.16	0.00	0.00	0.01
18.52	-0.0002	-0.18	0.21	0.00	0.00	0.03
18.53	-0.0003	-0.21	0.25	0.00	0.00	0.04
18.54	-0.0004	-0.24	0.29	0.00	0.00	0.05
18.55	-0.0005	-0.28	0.35	0.00	0.00	0.07

18.56	-0.0006	-0.34	0.42	0.00	0.00	0.08
18.57	-0.0007	-0.39	0.49	0.00	0.00	0.09
18.58	-0.0008	-0.45	0.56	0.00	0.00	0.10
18.59	-0.0008	-0.51	0.63	0.00	0.00	0.12
18.60	-0.0009	-0.57	0.70	0.00	0.00	0.13
18.61	-0.0010	-0.62	0.77	0.00	0.00	0.14
18.62	-0.0011	-0.68	0.84	0.00	0.00	0.16
18.63	-0.0012	-0.74	0.91	0.00	0.00	0.17
18.64	-0.0013	-0.79	0.98	0.00	0.00	0.18
18.65	-0.0014	-0.85	1.05	0.00	0.00	0.20
18.66	-0.0015	-0.91	1.12	0.00	0.00	0.21
18.67	-0.0016	-0.96	1.19	0.00	0.00	0.22
18.68	-0.0017	-1.02	1.26	0.00	0.00	0.24
18.69	-0.0018	-1.08	1.33	0.00	0.00	0.25
18.70	-0.0019	-1.13	1.40	0.00	0.00	0.26
18.71	-0.0020	-1.19	1.47	0.00	0.00	0.27
18.72	-0.0021	-1.25	1.54	0.00	0.00	0.29
18.73	-0.0022	-1.30	1.61	0.00	0.00	0.30
18.74	-0.0023	-1.36	1.68	0.00	0.00	0.31
18.75	-0.0024	-1.42	1.75	0.00	0.00	0.33
18.76	-0.0025	-1.47	1.82	0.00	0.00	0.34
18.77	-0.0025	-1.53	1.89	0.00	0.00	0.35
18.78	-0.0026	-1.59	1.96	0.00	0.00	0.37
18.79	-0.0027	-1.64	2.03	0.00	0.00	0.38
18.80	-0.0028	-1.70	2.10	0.00	0.00	0.39
18.81	-0.0029	-1.76	2.17	0.00	0.00	0.40
18.82	-0.0030	-1.81	2.24	0.00	0.00	0.42
18.83	-0.0031	-1.87	2.31	0.00	0.00	0.43
18.84	-0.0032	-1.93	2.38	0.00	0.00	0.44
18.85	-0.0033	-1.99	2.45	0.00	0.00	0.46
18.86	-0.0034	-2.04	2.52	0.00	0.00	0.47
18.87	-0.0035	-2.10	2.59	0.00	0.00	0.48
18.88	-0.0036	-2.16	2.66	0.00	0.00	0.49
18.89	-0.0037	-2.21	2.73	0.00	0.00	0.51
18.90	-0.0038	-2.27	2.80	0.00	0.00	0.52
18.91	-0.0039	-2.32	2.87	0.00	0.00	0.54
18.92	-0.0040	-2.35	2.93	0.00	0.00	0.56
18.93	-0.0041	-2.37	2.98	0.00	0.00	0.61
18.94	-0.0042	-2.38	3.04	0.00	0.00	0.65
18.95	-0.0043	-2.37	3.09	0.00	0.00	0.71
18.96	-0.0045	-2.36	3.13	0.00	0.00	0.77
18.97	-0.0046	-2.34	3.18	0.00	0.00	0.83
18.98	-0.0047	-2.31	3.22	0.00	0.00	0.90
18.99	-0.0049	-2.28	3.26	0.00	0.00	0.97
19.00	-0.0050	-2.25	3.30	0.00	0.00	1.04
19.01	-0.0049	-2.29	3.28	0.00	0.00	0.99
19.02	-0.0047	-2.32	3.21	0.00	0.00	0.89
19.03	-0.0046	-2.34	3.18	0.00	0.00	0.83
19.04	-0.0045	-2.36	3.14	0.00	0.00	0.77
19.05	-0.0043	-2.37	3.08	0.00	0.00	0.71
19.06	-0.0042	-2.38	3.04	0.00	0.00	0.65
19.07	-0.0041	-2.37	2.98	0.00	0.00	0.60
19.08	-0.0040	-2.36	2.93	0.00	0.00	0.56
19.09	-0.0039	-2.32	2.86	0.00	0.00	0.54
19.10	-0.0038	-2.27	2.80	0.00	0.00	0.52
19.11	-0.0037	-2.21	2.73	0.00	0.00	0.51
19.12	-0.0036	-2.16	2.66	0.00	0.00	0.49

19.13	-0.0035	-2.10	2.59	0.00	0.00	0.48
19.14	-0.0034	-2.04	2.52	0.00	0.00	0.47
19.15	-0.0033	-1.99	2.45	0.00	0.00	0.46
19.16	-0.0032	-1.93	2.38	0.00	0.00	0.44
19.17	-0.0031	-1.87	2.31	0.00	0.00	0.43
19.18	-0.0030	-1.81	2.24	0.00	0.00	0.42
19.19	-0.0029	-1.76	2.17	0.00	0.00	0.40
19.20	-0.0028	-1.70	2.10	0.00	0.00	0.39
19.21	-0.0027	-1.64	2.03	0.00	0.00	0.38
19.22	-0.0026	-1.59	1.96	0.00	0.00	0.37
19.23	-0.0025	-1.53	1.89	0.00	0.00	0.35
19.24	-0.0025	-1.47	1.82	0.00	0.00	0.34
19.25	-0.0024	-1.42	1.75	0.00	0.00	0.33
19.26	-0.0023	-1.36	1.68	0.00	0.00	0.31
19.27	-0.0022	-1.30	1.61	0.00	0.00	0.30
19.28	-0.0021	-1.25	1.54	0.00	0.00	0.29
19.29	-0.0020	-1.19	1.47	0.00	0.00	0.27
19.30	-0.0019	-1.13	1.40	0.00	0.00	0.26
19.31	-0.0018	-1.08	1.33	0.00	0.00	0.25
19.32	-0.0017	-1.02	1.26	0.00	0.00	0.24
19.33	-0.0016	-0.96	1.19	0.00	0.00	0.22
19.34	-0.0015	-0.91	1.12	0.00	0.00	0.21
19.35	-0.0014	-0.85	1.05	0.00	0.00	0.20
19.36	-0.0013	-0.79	0.98	0.00	0.00	0.18
19.37	-0.0012	-0.74	0.91	0.00	0.00	0.17
19.38	-0.0011	-0.68	0.84	0.00	0.00	0.16
19.39	-0.0010	-0.62	0.77	0.00	0.00	0.14
19.40	-0.0009	-0.57	0.70	0.00	0.00	0.13
19.41	-0.0008	-0.51	0.63	0.00	0.00	0.12
19.42	-0.0008	-0.45	0.56	0.00	0.00	0.10
19.43	-0.0007	-0.39	0.49	0.00	0.00	0.09
19.44	-0.0006	-0.34	0.42	0.00	0.00	0.08
19.45	-0.0005	-0.28	0.35	0.00	0.00	0.07
19.46	-0.0004	-0.24	0.29	0.00	0.00	0.05
19.47	-0.0003	-0.21	0.25	0.00	0.00	0.04
19.48	-0.0002	-0.18	0.21	0.00	0.00	0.03
19.49	-0.0001	-0.15	0.16	0.00	0.00	0.01
19.50	0.0000	-0.16	0.16	0.00	0.00	0.00
19.51	0.0001	-0.16	0.15	0.00	0.00	-0.01
19.52	0.0002	-0.21	0.18	0.00	0.00	-0.03
19.53	0.0003	-0.25	0.21	0.00	0.00	-0.04
19.54	0.0004	-0.29	0.24	0.00	0.00	-0.05
19.55	0.0005	-0.35	0.28	0.00	0.00	-0.07
19.56	0.0006	-0.42	0.34	0.00	0.00	-0.08
19.57	0.0007	-0.49	0.39	0.00	0.00	-0.10
19.58	0.0008	-0.56	0.45	0.00	0.00	-0.11
19.59	0.0008	-0.63	0.51	0.00	0.00	-0.12
19.60	0.0009	-0.70	0.57	0.00	0.00	-0.13
19.61	0.0010	-0.77	0.62	0.00	0.00	-0.15
19.62	0.0011	-0.84	0.68	0.00	0.00	-0.16
19.63	0.0012	-0.91	0.74	0.00	0.00	-0.17
19.64	0.0013	-0.98	0.79	0.00	0.00	-0.19
19.65	0.0014	-1.05	0.85	0.00	0.00	-0.20
19.66	0.0015	-1.12	0.91	0.00	0.00	-0.22
19.67	0.0016	-1.19	0.96	0.00	0.00	-0.23
19.68	0.0017	-1.26	1.02	0.00	0.00	-0.24
19.69	0.0018	-1.33	1.08	0.00	0.00	-0.25

19.70	0.0019	-1.40	1.13	0.00	0.00	-0.27
19.71	0.0020	-1.47	1.19	0.00	0.00	-0.28
19.72	0.0021	-1.54	1.25	0.00	0.00	-0.29
19.73	0.0022	-1.61	1.30	0.00	0.00	-0.31
19.74	0.0023	-1.68	1.36	0.00	0.00	-0.32
19.75	0.0024	-1.75	1.42	0.00	0.00	-0.33
19.76	0.0025	-1.82	1.47	0.00	0.00	-0.35
19.77	0.0025	-1.89	1.53	0.00	0.00	-0.36
19.78	0.0026	-1.96	1.59	0.00	0.00	-0.37
19.79	0.0027	-2.03	1.64	0.00	0.00	-0.39
19.80	0.0028	-2.10	1.70	0.00	0.00	-0.40
19.81	0.0029	-2.17	1.76	0.00	0.00	-0.41
19.82	0.0030	-2.24	1.81	0.00	0.00	-0.43
19.83	0.0031	-2.31	1.87	0.00	0.00	-0.44
19.84	0.0032	-2.38	1.93	0.00	0.00	-0.45
19.85	0.0033	-2.45	1.99	0.00	0.00	-0.47
19.86	0.0034	-2.52	2.04	0.00	0.00	-0.48
19.87	0.0035	-2.59	2.10	0.00	0.00	-0.49
19.88	0.0036	-2.66	2.16	0.00	0.00	-0.51
19.89	0.0037	-2.73	2.21	0.00	0.00	-0.52
19.90	0.0038	-2.80	2.27	0.00	0.00	-0.53
19.91	0.0039	-2.87	2.32	0.00	0.00	-0.55
19.92	0.0040	-2.93	2.35	0.00	0.00	-0.58
19.93	0.0041	-2.98	2.37	0.00	0.00	-0.62
19.94	0.0042	-3.04	2.38	0.00	0.00	-0.67
19.95	0.0043	-3.09	2.37	0.00	0.00	-0.72
19.96	0.0045	-3.13	2.36	0.00	0.00	-0.78
19.97	0.0046	-3.18	2.34	0.00	0.00	-0.84
19.98	0.0047	-3.22	2.31	0.00	0.00	-0.91
19.99	0.0049	-3.26	2.28	0.00	0.00	-0.98
20.00	0.0050	-3.30	2.25	0.00	0.00	-1.06
20.01	0.0049	-3.28	2.29	0.00	0.00	-1.00
20.02	0.0047	-3.21	2.32	0.00	0.00	-0.90
20.03	0.0046	-3.18	2.34	0.00	0.00	-0.84
20.04	0.0045	-3.14	2.36	0.00	0.00	-0.78
20.05	0.0043	-3.08	2.37	0.00	0.00	-0.72
20.06	0.0042	-3.04	2.38	0.00	0.00	-0.66
20.07	0.0041	-2.98	2.37	0.00	0.00	-0.62
20.08	0.0040	-2.93	2.36	0.00	0.00	-0.58
20.09	0.0039	-2.86	2.32	0.00	0.00	-0.55
20.10	0.0038	-2.80	2.27	0.00	0.00	-0.53
20.11	0.0037	-2.73	2.21	0.00	0.00	-0.52
20.12	0.0036	-2.66	2.16	0.00	0.00	-0.51
20.13	0.0035	-2.59	2.10	0.00	0.00	-0.49
20.14	0.0034	-2.52	2.04	0.00	0.00	-0.48
20.15	0.0033	-2.45	1.99	0.00	0.00	-0.47
20.16	0.0032	-2.38	1.93	0.00	0.00	-0.45
20.17	0.0031	-2.31	1.87	0.00	0.00	-0.44
20.18	0.0030	-2.24	1.81	0.00	0.00	-0.43
20.19	0.0029	-2.17	1.76	0.00	0.00	-0.41
20.20	0.0028	-2.10	1.70	0.00	0.00	-0.40
20.21	0.0027	-2.03	1.64	0.00	0.00	-0.39
20.22	0.0026	-1.96	1.59	0.00	0.00	-0.37
20.23	0.0025	-1.89	1.53	0.00	0.00	-0.36
20.24	0.0025	-1.82	1.47	0.00	0.00	-0.35
20.25	0.0024	-1.75	1.42	0.00	0.00	-0.33
20.26	0.0023	-1.68	1.36	0.00	0.00	-0.32

20.27	0.0022	-1.61	1.30	0.00	0.00	-0.31
20.28	0.0021	-1.54	1.25	0.00	0.00	-0.29
20.29	0.0020	-1.47	1.19	0.00	0.00	-0.28
20.30	0.0019	-1.40	1.13	0.00	0.00	-0.27
20.31	0.0018	-1.33	1.08	0.00	0.00	-0.25
20.32	0.0017	-1.26	1.02	0.00	0.00	-0.24
20.33	0.0016	-1.19	0.96	0.00	0.00	-0.23
20.34	0.0015	-1.12	0.91	0.00	0.00	-0.22
20.35	0.0014	-1.05	0.85	0.00	0.00	-0.20
20.36	0.0013	-0.98	0.79	0.00	0.00	-0.19
20.37	0.0012	-0.91	0.74	0.00	0.00	-0.17
20.38	0.0011	-0.84	0.68	0.00	0.00	-0.16
20.39	0.0010	-0.77	0.62	0.00	0.00	-0.15
20.40	0.0009	-0.70	0.57	0.00	0.00	-0.13
20.41	0.0008	-0.63	0.51	0.00	0.00	-0.12
20.42	0.0008	-0.56	0.45	0.00	0.00	-0.11
20.43	0.0007	-0.49	0.39	0.00	0.00	-0.10
20.44	0.0006	-0.42	0.34	0.00	0.00	-0.08
20.45	0.0005	-0.35	0.28	0.00	0.00	-0.07
20.46	0.0004	-0.29	0.24	0.00	0.00	-0.05
20.47	0.0003	-0.25	0.21	0.00	0.00	-0.04
20.48	0.0002	-0.21	0.18	0.00	0.00	-0.03
20.49	0.0001	-0.16	0.15	0.00	0.00	-0.01
20.50	0.0000	-0.16	0.16	0.00	0.00	0.00
20.51	-0.0001	-0.15	0.16	0.00	0.00	0.01
20.52	-0.0002	-0.18	0.21	0.00	0.00	0.03
20.53	-0.0003	-0.21	0.25	0.00	0.00	0.04
20.54	-0.0004	-0.24	0.29	0.00	0.00	0.05
20.55	-0.0005	-0.28	0.35	0.00	0.00	0.07
20.56	-0.0006	-0.34	0.42	0.00	0.00	0.08
20.57	-0.0007	-0.39	0.49	0.00	0.00	0.09
20.58	-0.0008	-0.45	0.56	0.00	0.00	0.10
20.59	-0.0008	-0.51	0.63	0.00	0.00	0.12
20.60	-0.0009	-0.57	0.70	0.00	0.00	0.13
20.61	-0.0010	-0.62	0.77	0.00	0.00	0.14
20.62	-0.0011	-0.68	0.84	0.00	0.00	0.16
20.63	-0.0012	-0.74	0.91	0.00	0.00	0.17
20.64	-0.0013	-0.79	0.98	0.00	0.00	0.18
20.65	-0.0014	-0.85	1.05	0.00	0.00	0.20
20.66	-0.0015	-0.91	1.12	0.00	0.00	0.21
20.67	-0.0016	-0.96	1.19	0.00	0.00	0.22
20.68	-0.0017	-1.02	1.26	0.00	0.00	0.24
20.69	-0.0018	-1.08	1.33	0.00	0.00	0.25
20.70	-0.0019	-1.13	1.40	0.00	0.00	0.26
20.71	-0.0020	-1.19	1.47	0.00	0.00	0.27
20.72	-0.0021	-1.25	1.54	0.00	0.00	0.29
20.73	-0.0022	-1.30	1.61	0.00	0.00	0.30
20.74	-0.0023	-1.36	1.68	0.00	0.00	0.31
20.75	-0.0024	-1.42	1.75	0.00	0.00	0.33
20.76	-0.0025	-1.47	1.82	0.00	0.00	0.34
20.77	-0.0025	-1.53	1.89	0.00	0.00	0.35
20.78	-0.0026	-1.59	1.96	0.00	0.00	0.37
20.79	-0.0027	-1.64	2.03	0.00	0.00	0.38
20.80	-0.0028	-1.70	2.10	0.00	0.00	0.39
20.81	-0.0029	-1.76	2.17	0.00	0.00	0.40
20.82	-0.0030	-1.81	2.24	0.00	0.00	0.42
20.83	-0.0031	-1.87	2.31	0.00	0.00	0.43

20.84	-0.0032	-1.93	2.38	0.00	0.00	0.44
20.85	-0.0033	-1.99	2.45	0.00	0.00	0.46
20.86	-0.0034	-2.04	2.52	0.00	0.00	0.47
20.87	-0.0035	-2.10	2.59	0.00	0.00	0.48
20.88	-0.0036	-2.16	2.66	0.00	0.00	0.49
20.89	-0.0037	-2.21	2.73	0.00	0.00	0.51
20.90	-0.0038	-2.27	2.80	0.00	0.00	0.52
20.91	-0.0039	-2.32	2.87	0.00	0.00	0.54
20.92	-0.0040	-2.35	2.93	0.00	0.00	0.56
20.93	-0.0041	-2.37	2.98	0.00	0.00	0.61
20.94	-0.0042	-2.38	3.04	0.00	0.00	0.65
20.95	-0.0043	-2.37	3.09	0.00	0.00	0.71
20.96	-0.0045	-2.36	3.13	0.00	0.00	0.77
20.97	-0.0046	-2.34	3.18	0.00	0.00	0.83
20.98	-0.0047	-2.31	3.22	0.00	0.00	0.90
20.99	-0.0049	-2.28	3.26	0.00	0.00	0.97
21.00	-0.0050	-2.25	3.30	0.00	0.00	1.04
21.01	-0.0049	-2.29	3.28	0.00	0.00	0.99
21.02	-0.0047	-2.32	3.21	0.00	0.00	0.89
21.03	-0.0046	-2.34	3.18	0.00	0.00	0.83
21.04	-0.0045	-2.36	3.14	0.00	0.00	0.77
21.05	-0.0043	-2.37	3.08	0.00	0.00	0.71
21.06	-0.0042	-2.38	3.04	0.00	0.00	0.65
21.07	-0.0041	-2.37	2.98	0.00	0.00	0.60
21.08	-0.0040	-2.36	2.93	0.00	0.00	0.56
21.09	-0.0039	-2.32	2.86	0.00	0.00	0.54
21.10	-0.0038	-2.27	2.80	0.00	0.00	0.52
21.11	-0.0037	-2.21	2.73	0.00	0.00	0.51
21.12	-0.0036	-2.16	2.66	0.00	0.00	0.49
21.13	-0.0035	-2.10	2.59	0.00	0.00	0.48
21.14	-0.0034	-2.04	2.52	0.00	0.00	0.47
21.15	-0.0033	-1.99	2.45	0.00	0.00	0.46
21.16	-0.0032	-1.93	2.38	0.00	0.00	0.44
21.17	-0.0031	-1.87	2.31	0.00	0.00	0.43
21.18	-0.0030	-1.81	2.24	0.00	0.00	0.42
21.19	-0.0029	-1.76	2.17	0.00	0.00	0.40
21.20	-0.0028	-1.70	2.10	0.00	0.00	0.39
21.21	-0.0027	-1.64	2.03	0.00	0.00	0.38
21.22	-0.0026	-1.59	1.96	0.00	0.00	0.37
21.23	-0.0025	-1.53	1.89	0.00	0.00	0.35
21.24	-0.0025	-1.47	1.82	0.00	0.00	0.34
21.25	-0.0024	-1.42	1.75	0.00	0.00	0.33
21.26	-0.0023	-1.36	1.68	0.00	0.00	0.31
21.27	-0.0022	-1.30	1.61	0.00	0.00	0.30
21.28	-0.0021	-1.25	1.54	0.00	0.00	0.29
21.29	-0.0020	-1.19	1.47	0.00	0.00	0.27
21.30	-0.0019	-1.13	1.40	0.00	0.00	0.26
21.31	-0.0018	-1.08	1.33	0.00	0.00	0.25
21.32	-0.0017	-1.02	1.26	0.00	0.00	0.24
21.33	-0.0016	-0.96	1.19	0.00	0.00	0.22
21.34	-0.0015	-0.91	1.12	0.00	0.00	0.21
21.35	-0.0014	-0.85	1.05	0.00	0.00	0.20
21.36	-0.0013	-0.79	0.98	0.00	0.00	0.18
21.37	-0.0012	-0.74	0.91	0.00	0.00	0.17
21.38	-0.0011	-0.68	0.84	0.00	0.00	0.16
21.39	-0.0010	-0.62	0.77	0.00	0.00	0.14
21.40	-0.0009	-0.57	0.70	0.00	0.00	0.13

21.41	-0.0008	-0.51	0.63	0.00	0.00	0.12
21.42	-0.0008	-0.45	0.56	0.00	0.00	0.10
21.43	-0.0007	-0.39	0.49	0.00	0.00	0.09
21.44	-0.0006	-0.34	0.42	0.00	0.00	0.08
21.45	-0.0005	-0.28	0.35	0.00	0.00	0.07
21.46	-0.0004	-0.24	0.29	0.00	0.00	0.05
21.47	-0.0003	-0.21	0.25	0.00	0.00	0.04
21.48	-0.0002	-0.18	0.21	0.00	0.00	0.03
21.49	-0.0001	-0.15	0.16	0.00	0.00	0.01
21.50	0.0000	-0.16	0.16	0.00	0.00	0.00
21.51	0.0001	-0.16	0.15	0.00	0.00	-0.01
21.52	0.0002	-0.21	0.18	0.00	0.00	-0.03
21.53	0.0003	-0.25	0.21	0.00	0.00	-0.04
21.54	0.0004	-0.29	0.24	0.00	0.00	-0.05
21.55	0.0005	-0.35	0.28	0.00	0.00	-0.07
21.56	0.0006	-0.42	0.34	0.00	0.00	-0.08
21.57	0.0007	-0.49	0.39	0.00	0.00	-0.10
21.58	0.0008	-0.56	0.45	0.00	0.00	-0.11
21.59	0.0008	-0.63	0.51	0.00	0.00	-0.12
21.60	0.0009	-0.70	0.57	0.00	0.00	-0.13
21.61	0.0010	-0.77	0.62	0.00	0.00	-0.15
21.62	0.0011	-0.84	0.68	0.00	0.00	-0.16
21.63	0.0012	-0.91	0.74	0.00	0.00	-0.17
21.64	0.0013	-0.98	0.79	0.00	0.00	-0.19
21.65	0.0014	-1.05	0.85	0.00	0.00	-0.20
21.66	0.0015	-1.12	0.91	0.00	0.00	-0.22
21.67	0.0016	-1.19	0.96	0.00	0.00	-0.23
21.68	0.0017	-1.26	1.02	0.00	0.00	-0.24
21.69	0.0018	-1.33	1.08	0.00	0.00	-0.25
21.70	0.0019	-1.40	1.13	0.00	0.00	-0.27
21.71	0.0020	-1.47	1.19	0.00	0.00	-0.28
21.72	0.0021	-1.54	1.25	0.00	0.00	-0.29
21.73	0.0022	-1.61	1.30	0.00	0.00	-0.31
21.74	0.0023	-1.68	1.36	0.00	0.00	-0.32
21.75	0.0024	-1.75	1.42	0.00	0.00	-0.33
21.76	0.0025	-1.82	1.47	0.00	0.00	-0.35
21.77	0.0025	-1.89	1.53	0.00	0.00	-0.36
21.78	0.0026	-1.96	1.59	0.00	0.00	-0.37
21.79	0.0027	-2.03	1.64	0.00	0.00	-0.39
21.80	0.0028	-2.10	1.70	0.00	0.00	-0.40
21.81	0.0029	-2.17	1.76	0.00	0.00	-0.41
21.82	0.0030	-2.24	1.81	0.00	0.00	-0.43
21.83	0.0031	-2.31	1.87	0.00	0.00	-0.44
21.84	0.0032	-2.38	1.93	0.00	0.00	-0.45
21.85	0.0033	-2.45	1.99	0.00	0.00	-0.47
21.86	0.0034	-2.52	2.04	0.00	0.00	-0.48
21.87	0.0035	-2.59	2.10	0.00	0.00	-0.49
21.88	0.0036	-2.66	2.16	0.00	0.00	-0.51
21.89	0.0037	-2.73	2.21	0.00	0.00	-0.52
21.90	0.0038	-2.80	2.27	0.00	0.00	-0.53
21.91	0.0039	-2.87	2.32	0.00	0.00	-0.55
21.92	0.0040	-2.93	2.35	0.00	0.00	-0.58
21.93	0.0041	-2.98	2.37	0.00	0.00	-0.62
21.94	0.0042	-3.04	2.38	0.00	0.00	-0.67
21.95	0.0043	-3.09	2.37	0.00	0.00	-0.72
21.96	0.0045	-3.13	2.36	0.00	0.00	-0.78
21.97	0.0046	-3.18	2.34	0.00	0.00	-0.84

21.98	0.0047	-3.22	2.31	0.00	0.00	-0.91
21.99	0.0049	-3.26	2.28	0.00	0.00	-0.98
22.00	0.0050	-3.30	2.25	0.00	0.00	-1.06
22.01	0.0049	-3.28	2.29	0.00	0.00	-1.00
22.02	0.0047	-3.21	2.32	0.00	0.00	-0.90
22.03	0.0046	-3.18	2.34	0.00	0.00	-0.84
22.04	0.0045	-3.14	2.36	0.00	0.00	-0.78
22.05	0.0043	-3.08	2.37	0.00	0.00	-0.72
22.06	0.0042	-3.04	2.38	0.00	0.00	-0.66
22.07	0.0041	-2.98	2.37	0.00	0.00	-0.62
22.08	0.0040	-2.93	2.36	0.00	0.00	-0.58
22.09	0.0039	-2.86	2.32	0.00	0.00	-0.55
22.10	0.0038	-2.80	2.27	0.00	0.00	-0.53
22.11	0.0037	-2.73	2.21	0.00	0.00	-0.52
22.12	0.0036	-2.66	2.16	0.00	0.00	-0.51
22.13	0.0035	-2.59	2.10	0.00	0.00	-0.49
22.14	0.0034	-2.52	2.04	0.00	0.00	-0.48
22.15	0.0033	-2.45	1.99	0.00	0.00	-0.47
22.16	0.0032	-2.38	1.93	0.00	0.00	-0.45
22.17	0.0031	-2.31	1.87	0.00	0.00	-0.44
22.18	0.0030	-2.24	1.81	0.00	0.00	-0.43
22.19	0.0029	-2.17	1.76	0.00	0.00	-0.41
22.20	0.0028	-2.10	1.70	0.00	0.00	-0.40
22.21	0.0027	-2.03	1.64	0.00	0.00	-0.39
22.22	0.0026	-1.96	1.59	0.00	0.00	-0.37
22.23	0.0025	-1.89	1.53	0.00	0.00	-0.36
22.24	0.0025	-1.82	1.47	0.00	0.00	-0.35
22.25	0.0024	-1.75	1.42	0.00	0.00	-0.33
22.26	0.0023	-1.68	1.36	0.00	0.00	-0.32
22.27	0.0022	-1.61	1.30	0.00	0.00	-0.31
22.28	0.0021	-1.54	1.25	0.00	0.00	-0.29
22.29	0.0020	-1.47	1.19	0.00	0.00	-0.28
22.30	0.0019	-1.40	1.13	0.00	0.00	-0.27
22.31	0.0018	-1.33	1.08	0.00	0.00	-0.25
22.32	0.0017	-1.26	1.02	0.00	0.00	-0.24
22.33	0.0016	-1.19	0.96	0.00	0.00	-0.23
22.34	0.0015	-1.12	0.91	0.00	0.00	-0.22
22.35	0.0014	-1.05	0.85	0.00	0.00	-0.20
22.36	0.0013	-0.98	0.79	0.00	0.00	-0.19
22.37	0.0012	-0.91	0.74	0.00	0.00	-0.17
22.38	0.0011	-0.84	0.68	0.00	0.00	-0.16
22.39	0.0010	-0.77	0.62	0.00	0.00	-0.15
22.40	0.0009	-0.70	0.57	0.00	0.00	-0.13
22.41	0.0008	-0.63	0.51	0.00	0.00	-0.12
22.42	0.0008	-0.56	0.45	0.00	0.00	-0.11
22.43	0.0007	-0.49	0.39	0.00	0.00	-0.10
22.44	0.0006	-0.42	0.34	0.00	0.00	-0.08
22.45	0.0005	-0.35	0.28	0.00	0.00	-0.07
22.46	0.0004	-0.29	0.24	0.00	0.00	-0.05
22.47	0.0003	-0.25	0.21	0.00	0.00	-0.04
22.48	0.0002	-0.21	0.18	0.00	0.00	-0.03
22.49	0.0001	-0.16	0.15	0.00	0.00	-0.01
22.50	0.0000	-0.16	0.16	0.00	0.00	0.00
22.51	-0.0001	-0.15	0.16	0.00	0.00	0.01
22.52	-0.0002	-0.18	0.21	0.00	0.00	0.03
22.53	-0.0003	-0.21	0.25	0.00	0.00	0.04
22.54	-0.0004	-0.24	0.29	0.00	0.00	0.05

22.55	-0.0005	-0.28	0.35	0.00	0.00	0.07
22.56	-0.0006	-0.34	0.42	0.00	0.00	0.08
22.57	-0.0007	-0.39	0.49	0.00	0.00	0.09
22.58	-0.0008	-0.45	0.56	0.00	0.00	0.10
22.59	-0.0008	-0.51	0.63	0.00	0.00	0.12
22.60	-0.0009	-0.57	0.70	0.00	0.00	0.13
22.61	-0.0010	-0.62	0.77	0.00	0.00	0.14
22.62	-0.0011	-0.68	0.84	0.00	0.00	0.16
22.63	-0.0012	-0.74	0.91	0.00	0.00	0.17
22.64	-0.0013	-0.79	0.98	0.00	0.00	0.18
22.65	-0.0014	-0.85	1.05	0.00	0.00	0.20
22.66	-0.0015	-0.91	1.12	0.00	0.00	0.21
22.67	-0.0016	-0.96	1.19	0.00	0.00	0.22
22.68	-0.0017	-1.02	1.26	0.00	0.00	0.24
22.69	-0.0018	-1.08	1.33	0.00	0.00	0.25
22.70	-0.0019	-1.13	1.40	0.00	0.00	0.26
22.71	-0.0020	-1.19	1.47	0.00	0.00	0.27
22.72	-0.0021	-1.25	1.54	0.00	0.00	0.29
22.73	-0.0022	-1.30	1.61	0.00	0.00	0.30
22.74	-0.0023	-1.36	1.68	0.00	0.00	0.31
22.75	-0.0024	-1.42	1.75	0.00	0.00	0.33
22.76	-0.0025	-1.47	1.82	0.00	0.00	0.34
22.77	-0.0025	-1.53	1.89	0.00	0.00	0.35
22.78	-0.0026	-1.59	1.96	0.00	0.00	0.37
22.79	-0.0027	-1.64	2.03	0.00	0.00	0.38
22.80	-0.0028	-1.70	2.10	0.00	0.00	0.39
22.81	-0.0029	-1.76	2.17	0.00	0.00	0.40
22.82	-0.0030	-1.81	2.24	0.00	0.00	0.42
22.83	-0.0031	-1.87	2.31	0.00	0.00	0.43
22.84	-0.0032	-1.93	2.38	0.00	0.00	0.44
22.85	-0.0033	-1.99	2.45	0.00	0.00	0.46
22.86	-0.0034	-2.04	2.52	0.00	0.00	0.47
22.87	-0.0035	-2.10	2.59	0.00	0.00	0.48
22.88	-0.0036	-2.16	2.66	0.00	0.00	0.49
22.89	-0.0037	-2.21	2.73	0.00	0.00	0.51
22.90	-0.0038	-2.27	2.80	0.00	0.00	0.52
22.91	-0.0039	-2.32	2.87	0.00	0.00	0.54
22.92	-0.0040	-2.35	2.93	0.00	0.00	0.56
22.93	-0.0041	-2.37	2.98	0.00	0.00	0.61
22.94	-0.0042	-2.38	3.04	0.00	0.00	0.65
22.95	-0.0043	-2.37	3.09	0.00	0.00	0.71
22.96	-0.0045	-2.36	3.13	0.00	0.00	0.77
22.97	-0.0046	-2.34	3.18	0.00	0.00	0.83
22.98	-0.0047	-2.31	3.22	0.00	0.00	0.90
22.99	-0.0049	-2.28	3.26	0.00	0.00	0.97
23.00	-0.0050	-2.25	3.30	0.00	0.00	1.04
23.01	-0.0049	-2.29	3.28	0.00	0.00	0.99
23.02	-0.0047	-2.32	3.21	0.00	0.00	0.89
23.03	-0.0046	-2.34	3.18	0.00	0.00	0.83
23.04	-0.0045	-2.36	3.14	0.00	0.00	0.77
23.05	-0.0043	-2.37	3.08	0.00	0.00	0.71
23.06	-0.0042	-2.38	3.04	0.00	0.00	0.65
23.07	-0.0041	-2.37	2.98	0.00	0.00	0.60
23.08	-0.0040	-2.36	2.93	0.00	0.00	0.56
23.09	-0.0039	-2.32	2.86	0.00	0.00	0.54
23.10	-0.0038	-2.27	2.80	0.00	0.00	0.52
23.11	-0.0037	-2.21	2.73	0.00	0.00	0.51

23.12	-0.0036	-2.16	2.66	0.00	0.00	0.49
23.13	-0.0035	-2.10	2.59	0.00	0.00	0.48
23.14	-0.0034	-2.04	2.52	0.00	0.00	0.47
23.15	-0.0033	-1.99	2.45	0.00	0.00	0.46
23.16	-0.0032	-1.93	2.38	0.00	0.00	0.44
23.17	-0.0031	-1.87	2.31	0.00	0.00	0.43
23.18	-0.0030	-1.81	2.24	0.00	0.00	0.42
23.19	-0.0029	-1.76	2.17	0.00	0.00	0.40
23.20	-0.0028	-1.70	2.10	0.00	0.00	0.39
23.21	-0.0027	-1.64	2.03	0.00	0.00	0.38
23.22	-0.0026	-1.59	1.96	0.00	0.00	0.37
23.23	-0.0025	-1.53	1.89	0.00	0.00	0.35
23.24	-0.0025	-1.47	1.82	0.00	0.00	0.34
23.25	-0.0024	-1.42	1.75	0.00	0.00	0.33
23.26	-0.0023	-1.36	1.68	0.00	0.00	0.31
23.27	-0.0022	-1.30	1.61	0.00	0.00	0.30
23.28	-0.0021	-1.25	1.54	0.00	0.00	0.29
23.29	-0.0020	-1.19	1.47	0.00	0.00	0.27
23.30	-0.0019	-1.13	1.40	0.00	0.00	0.26
23.31	-0.0018	-1.08	1.33	0.00	0.00	0.25
23.32	-0.0017	-1.02	1.26	0.00	0.00	0.24
23.33	-0.0016	-0.96	1.19	0.00	0.00	0.22
23.34	-0.0015	-0.91	1.12	0.00	0.00	0.21
23.35	-0.0014	-0.85	1.05	0.00	0.00	0.20
23.36	-0.0013	-0.79	0.98	0.00	0.00	0.18
23.37	-0.0012	-0.74	0.91	0.00	0.00	0.17
23.38	-0.0011	-0.68	0.84	0.00	0.00	0.16
23.39	-0.0010	-0.62	0.77	0.00	0.00	0.14
23.40	-0.0009	-0.57	0.70	0.00	0.00	0.13
23.41	-0.0008	-0.51	0.63	0.00	0.00	0.12
23.42	-0.0008	-0.45	0.56	0.00	0.00	0.10
23.43	-0.0007	-0.39	0.49	0.00	0.00	0.09
23.44	-0.0006	-0.34	0.42	0.00	0.00	0.08
23.45	-0.0005	-0.28	0.35	0.00	0.00	0.07
23.46	-0.0004	-0.24	0.29	0.00	0.00	0.05
23.47	-0.0003	-0.21	0.25	0.00	0.00	0.04
23.48	-0.0002	-0.18	0.21	0.00	0.00	0.03
23.49	-0.0001	-0.15	0.16	0.00	0.00	0.01
23.50	0.0000	-0.16	0.16	0.00	0.00	0.00
23.51	0.0001	-0.16	0.15	0.00	0.00	-0.01
23.52	0.0002	-0.21	0.18	0.00	0.00	-0.03
23.53	0.0003	-0.25	0.21	0.00	0.00	-0.04
23.54	0.0004	-0.29	0.24	0.00	0.00	-0.05
23.55	0.0005	-0.35	0.28	0.00	0.00	-0.07
23.56	0.0006	-0.42	0.34	0.00	0.00	-0.08
23.57	0.0007	-0.49	0.39	0.00	0.00	-0.10
23.58	0.0008	-0.56	0.45	0.00	0.00	-0.11
23.59	0.0008	-0.63	0.51	0.00	0.00	-0.12
23.60	0.0009	-0.70	0.57	0.00	0.00	-0.13
23.61	0.0010	-0.77	0.62	0.00	0.00	-0.15
23.62	0.0011	-0.84	0.68	0.00	0.00	-0.16
23.63	0.0012	-0.91	0.74	0.00	0.00	-0.17
23.64	0.0013	-0.98	0.79	0.00	0.00	-0.19
23.65	0.0014	-1.05	0.85	0.00	0.00	-0.20
23.66	0.0015	-1.12	0.91	0.00	0.00	-0.22
23.67	0.0016	-1.19	0.96	0.00	0.00	-0.23
23.68	0.0017	-1.26	1.02	0.00	0.00	-0.24

23.69	0.0018	-1.33	1.08	0.00	0.00	-0.25
23.70	0.0019	-1.40	1.13	0.00	0.00	-0.27
23.71	0.0020	-1.47	1.19	0.00	0.00	-0.28
23.72	0.0021	-1.54	1.25	0.00	0.00	-0.29
23.73	0.0022	-1.61	1.30	0.00	0.00	-0.31
23.74	0.0023	-1.68	1.36	0.00	0.00	-0.32
23.75	0.0024	-1.75	1.42	0.00	0.00	-0.33
23.76	0.0025	-1.82	1.47	0.00	0.00	-0.35
23.77	0.0025	-1.89	1.53	0.00	0.00	-0.36
23.78	0.0026	-1.96	1.59	0.00	0.00	-0.37
23.79	0.0027	-2.03	1.64	0.00	0.00	-0.39
23.80	0.0028	-2.10	1.70	0.00	0.00	-0.40
23.81	0.0029	-2.17	1.76	0.00	0.00	-0.41
23.82	0.0030	-2.24	1.81	0.00	0.00	-0.43
23.83	0.0031	-2.31	1.87	0.00	0.00	-0.44
23.84	0.0032	-2.38	1.93	0.00	0.00	-0.45
23.85	0.0033	-2.45	1.99	0.00	0.00	-0.47
23.86	0.0034	-2.52	2.04	0.00	0.00	-0.48
23.87	0.0035	-2.59	2.10	0.00	0.00	-0.49
23.88	0.0036	-2.66	2.16	0.00	0.00	-0.51
23.89	0.0037	-2.73	2.21	0.00	0.00	-0.52
23.90	0.0038	-2.80	2.27	0.00	0.00	-0.53
23.91	0.0039	-2.87	2.32	0.00	0.00	-0.55
23.92	0.0040	-2.93	2.35	0.00	0.00	-0.58
23.93	0.0041	-2.98	2.37	0.00	0.00	-0.62
23.94	0.0042	-3.04	2.38	0.00	0.00	-0.67
23.95	0.0043	-3.09	2.37	0.00	0.00	-0.72
23.96	0.0045	-3.13	2.36	0.00	0.00	-0.78
23.97	0.0046	-3.18	2.34	0.00	0.00	-0.84
23.98	0.0047	-3.22	2.31	0.00	0.00	-0.91
23.99	0.0049	-3.26	2.28	0.00	0.00	-0.98
24.00	0.0050	-3.30	2.25	0.00	0.00	-1.06
24.01	0.0049	-3.28	2.29	0.00	0.00	-0.99
24.02	0.0047	-3.20	2.33	0.00	0.00	-0.88
24.03	0.0045	-3.15	2.35	0.00	0.00	-0.81
24.04	0.0044	-3.11	2.37	0.00	0.00	-0.74
24.05	0.0042	-3.04	2.38	0.00	0.00	-0.67
24.06	0.0041	-2.98	2.37	0.00	0.00	-0.62
24.07	0.0040	-2.92	2.35	0.00	0.00	-0.57
24.08	0.0038	-2.84	2.30	0.00	0.00	-0.55
24.09	0.0037	-2.76	2.24	0.00	0.00	-0.53
24.10	0.0036	-2.68	2.17	0.00	0.00	-0.51
24.11	0.0035	-2.60	2.11	0.00	0.00	-0.50
24.12	0.0034	-2.51	2.04	0.00	0.00	-0.48
24.13	0.0033	-2.43	1.97	0.00	0.00	-0.46
24.14	0.0032	-2.35	1.91	0.00	0.00	-0.45
24.15	0.0031	-2.27	1.84	0.00	0.00	-0.43
24.16	0.0030	-2.19	1.78	0.00	0.00	-0.42
24.17	0.0028	-2.11	1.71	0.00	0.00	-0.40
24.18	0.0027	-2.02	1.64	0.00	0.00	-0.39
24.19	0.0026	-1.94	1.58	0.00	0.00	-0.37
24.20	0.0025	-1.86	1.51	0.00	0.00	-0.36
24.21	0.0024	-1.78	1.44	0.00	0.00	-0.34
24.22	0.0023	-1.70	1.38	0.00	0.00	-0.32
24.23	0.0022	-1.62	1.31	0.00	0.00	-0.31
24.24	0.0021	-1.53	1.24	0.00	0.00	-0.29
24.25	0.0020	-1.45	1.18	0.00	0.00	-0.28

24.26	0.0019	-1.37	1.11	0.00	0.00	-0.26
24.27	0.0017	-1.29	1.05	0.00	0.00	-0.25
24.28	0.0016	-1.21	0.98	0.00	0.00	-0.23
24.29	0.0015	-1.13	0.91	0.00	0.00	-0.22
24.30	0.0014	-1.04	0.84	0.00	0.00	-0.20
24.31	0.0013	-0.96	0.78	0.00	0.00	-0.18
24.32	0.0012	-0.88	0.71	0.00	0.00	-0.17
24.33	0.0011	-0.80	0.65	0.00	0.00	-0.15
24.34	0.0010	-0.72	0.58	0.00	0.00	-0.14
24.35	0.0009	-0.63	0.51	0.00	0.00	-0.12
24.36	0.0007	-0.55	0.45	0.00	0.00	-0.11
24.37	0.0006	-0.47	0.38	0.00	0.00	-0.09
24.38	0.0005	-0.39	0.32	0.00	0.00	-0.08
24.39	0.0004	-0.31	0.25	0.00	0.00	-0.06
24.40	0.0003	-0.26	0.21	0.00	0.00	-0.04
24.41	0.0002	-0.21	0.18	0.00	0.00	-0.03
24.42	0.0001	-0.16	0.15	0.00	0.00	-0.01
24.43	0.0000	-0.15	0.16	0.00	0.00	0.00
24.44	-0.0001	-0.16	0.18	0.00	0.00	0.02
24.45	-0.0002	-0.20	0.23	0.00	0.00	0.03
24.46	-0.0004	-0.23	0.28	0.00	0.00	0.05
24.47	-0.0005	-0.28	0.35	0.00	0.00	0.07
24.48	-0.0006	-0.35	0.43	0.00	0.00	0.08
24.49	-0.0007	-0.41	0.51	0.00	0.00	0.10
24.50	-0.0008	-0.48	0.59	0.00	0.00	0.11
24.51	-0.0009	-0.54	0.67	0.00	0.00	0.13
24.52	-0.0010	-0.61	0.75	0.00	0.00	0.14
24.53	-0.0011	-0.68	0.84	0.00	0.00	0.16
24.54	-0.0012	-0.74	0.92	0.00	0.00	0.17
24.55	-0.0013	-0.81	1.00	0.00	0.00	0.19
24.56	-0.0015	-0.88	1.08	0.00	0.00	0.20
24.57	-0.0016	-0.94	1.16	0.00	0.00	0.22
24.58	-0.0017	-1.01	1.24	0.00	0.00	0.23
24.59	-0.0018	-1.08	1.33	0.00	0.00	0.25
24.60	-0.0019	-1.14	1.41	0.00	0.00	0.26
24.61	-0.0020	-1.21	1.49	0.00	0.00	0.28
24.62	-0.0021	-1.27	1.57	0.00	0.00	0.29
24.63	-0.0022	-1.34	1.65	0.00	0.00	0.31
24.64	-0.0023	-1.41	1.74	0.00	0.00	0.32
24.65	-0.0025	-1.47	1.82	0.00	0.00	0.34
24.66	-0.0026	-1.54	1.90	0.00	0.00	0.35
24.67	-0.0027	-1.61	1.98	0.00	0.00	0.37
24.68	-0.0028	-1.67	2.06	0.00	0.00	0.38
24.69	-0.0029	-1.74	2.14	0.00	0.00	0.40
24.70	-0.0030	-1.81	2.23	0.00	0.00	0.42
24.71	-0.0031	-1.87	2.31	0.00	0.00	0.43
24.72	-0.0032	-1.94	2.39	0.00	0.00	0.45
24.73	-0.0033	-2.01	2.47	0.00	0.00	0.46
24.74	-0.0034	-2.07	2.55	0.00	0.00	0.48
24.75	-0.0036	-2.14	2.63	0.00	0.00	0.49
24.76	-0.0037	-2.21	2.72	0.00	0.00	0.51
24.77	-0.0038	-2.27	2.80	0.00	0.00	0.52
24.78	-0.0039	-2.33	2.88	0.00	0.00	0.54
24.79	-0.0040	-2.36	2.95	0.00	0.00	0.58
24.80	-0.0042	-2.37	3.01	0.00	0.00	0.63
24.81	-0.0043	-2.38	3.07	0.00	0.00	0.69
24.82	-0.0044	-2.36	3.13	0.00	0.00	0.76

24.83	-0.0046	-2.34	3.18	0.00	0.00	0.83
24.84	-0.0048	-2.31	3.23	0.00	0.00	0.91
24.85	-0.0049	-2.27	3.28	0.00	0.00	1.00
24.86	-0.0051	-2.23	3.32	0.00	0.00	1.08
24.87	-0.0053	-2.18	3.36	0.00	0.00	1.18
24.88	-0.0054	-2.13	3.41	0.00	0.00	1.27
24.89	-0.0056	-2.08	3.45	0.00	0.00	1.36
24.90	-0.0058	-2.03	3.49	0.00	0.00	1.46
24.91	-0.0059	-1.97	3.53	0.00	0.00	1.56
24.92	-0.0061	-1.91	3.57	0.00	0.00	1.66
24.93	-0.0063	-1.85	3.61	0.00	0.00	1.76
24.94	-0.0064	-1.79	3.65	0.00	0.00	1.86
24.95	-0.0066	-1.73	3.69	0.00	0.00	1.95
24.96	-0.0068	-1.67	3.73	0.00	-0.01	2.05
24.97	-0.0070	-1.61	3.77	0.00	-0.01	2.15
24.98	-0.0071	-1.54	3.81	0.00	-0.01	2.26
24.99	-0.0073	-1.48	3.85	0.00	-0.01	2.36
25.00	-0.0075	-1.41	3.88	0.00	-0.01	2.46
25.01	-0.0073	-1.48	3.87	0.00	-0.01	2.38
25.02	-0.0071	-1.56	3.79	0.00	-0.01	2.22
25.03	-0.0069	-1.63	3.75	0.00	-0.01	2.11
25.04	-0.0067	-1.70	3.71	0.00	0.00	2.00
25.05	-0.0065	-1.77	3.66	0.00	0.00	1.88
25.06	-0.0063	-1.84	3.62	0.00	0.00	1.77
25.07	-0.0061	-1.91	3.57	0.00	0.00	1.66
25.08	-0.0059	-1.98	3.53	0.00	0.00	1.54
25.09	-0.0057	-2.04	3.48	0.00	0.00	1.43
25.10	-0.0055	-2.10	3.43	0.00	0.00	1.32
25.11	-0.0053	-2.16	3.38	0.00	0.00	1.21
25.12	-0.0051	-2.22	3.33	0.00	0.00	1.11
25.13	-0.0049	-2.27	3.28	0.00	0.00	1.01
25.14	-0.0048	-2.31	3.23	0.00	0.00	0.91
25.15	-0.0046	-2.34	3.17	0.00	0.00	0.82
25.16	-0.0044	-2.37	3.11	0.00	0.00	0.74
25.17	-0.0042	-2.38	3.04	0.00	0.00	0.66
25.18	-0.0041	-2.37	2.97	0.00	0.00	0.60
25.19	-0.0039	-2.34	2.89	0.00	0.00	0.55
25.20	-0.0038	-2.27	2.80	0.00	0.00	0.52
25.21	-0.0037	-2.20	2.71	0.00	0.00	0.51
25.22	-0.0035	-2.13	2.62	0.00	0.00	0.49
25.23	-0.0034	-2.05	2.53	0.00	0.00	0.47
25.24	-0.0033	-1.97	2.43	0.00	0.00	0.45
25.25	-0.0032	-1.90	2.34	0.00	0.00	0.44
25.26	-0.0030	-1.82	2.25	0.00	0.00	0.42
25.27	-0.0029	-1.75	2.15	0.00	0.00	0.40
25.28	-0.0028	-1.67	2.06	0.00	0.00	0.38
25.29	-0.0027	-1.59	1.96	0.00	0.00	0.37
25.30	-0.0025	-1.52	1.87	0.00	0.00	0.35
25.31	-0.0024	-1.44	1.78	0.00	0.00	0.33
25.32	-0.0023	-1.37	1.68	0.00	0.00	0.31
25.33	-0.0021	-1.29	1.59	0.00	0.00	0.30
25.34	-0.0020	-1.21	1.50	0.00	0.00	0.28
25.35	-0.0019	-1.14	1.40	0.00	0.00	0.26
25.36	-0.0018	-1.06	1.31	0.00	0.00	0.24
25.37	-0.0016	-0.99	1.22	0.00	0.00	0.23
25.38	-0.0015	-0.91	1.12	0.00	0.00	0.21
25.39	-0.0014	-0.83	1.03	0.00	0.00	0.19

25.40	-0.0013	-0.76	0.93	0.00	0.00	0.18
25.41	-0.0011	-0.68	0.84	0.00	0.00	0.16
25.42	-0.0010	-0.61	0.75	0.00	0.00	0.14
25.43	-0.0009	-0.53	0.65	0.00	0.00	0.12
25.44	-0.0008	-0.45	0.56	0.00	0.00	0.10
25.45	-0.0006	-0.38	0.47	0.00	0.00	0.09
25.46	-0.0005	-0.30	0.37	0.00	0.00	0.07
25.47	-0.0004	-0.24	0.29	0.00	0.00	0.05
25.48	-0.0003	-0.20	0.23	0.00	0.00	0.03
25.49	-0.0001	-0.16	0.18	0.00	0.00	0.02
25.50	0.0000	-0.16	0.16	0.00	0.00	0.00
25.51	0.0001	-0.18	0.16	0.00	0.00	-0.02
25.52	0.0003	-0.23	0.20	0.00	0.00	-0.04
25.53	0.0004	-0.29	0.24	0.00	0.00	-0.05
25.54	0.0005	-0.37	0.30	0.00	0.00	-0.07
25.55	0.0006	-0.47	0.38	0.00	0.00	-0.09
25.56	0.0008	-0.56	0.45	0.00	0.00	-0.11
25.57	0.0009	-0.65	0.53	0.00	0.00	-0.13
25.58	0.0010	-0.75	0.61	0.00	0.00	-0.14
25.59	0.0011	-0.84	0.68	0.00	0.00	-0.16
25.60	0.0013	-0.93	0.76	0.00	0.00	-0.18
25.61	0.0014	-1.03	0.83	0.00	0.00	-0.20
25.62	0.0015	-1.12	0.91	0.00	0.00	-0.21
25.63	0.0016	-1.22	0.99	0.00	0.00	-0.23
25.64	0.0018	-1.31	1.06	0.00	0.00	-0.25
25.65	0.0019	-1.40	1.14	0.00	0.00	-0.27
25.66	0.0020	-1.50	1.21	0.00	0.00	-0.29
25.67	0.0021	-1.59	1.29	0.00	0.00	-0.30
25.68	0.0023	-1.68	1.37	0.00	0.00	-0.32
25.69	0.0024	-1.78	1.44	0.00	0.00	-0.34
25.70	0.0025	-1.87	1.52	0.00	0.00	-0.36
25.71	0.0027	-1.96	1.59	0.00	0.00	-0.37
25.72	0.0028	-2.06	1.67	0.00	0.00	-0.39
25.73	0.0029	-2.15	1.75	0.00	0.00	-0.41
25.74	0.0030	-2.25	1.82	0.00	0.00	-0.43
25.75	0.0032	-2.34	1.90	0.00	0.00	-0.45
25.76	0.0033	-2.43	1.97	0.00	0.00	-0.46
25.77	0.0034	-2.53	2.05	0.00	0.00	-0.48
25.78	0.0035	-2.62	2.13	0.00	0.00	-0.50
25.79	0.0037	-2.71	2.20	0.00	0.00	-0.52
25.80	0.0038	-2.81	2.28	0.00	0.00	-0.53
25.81	0.0039	-2.89	2.34	0.00	0.00	-0.56
25.82	0.0041	-2.97	2.37	0.00	0.00	-0.61
25.83	0.0042	-3.04	2.37	0.00	0.00	-0.68
25.84	0.0044	-3.11	2.37	0.00	0.00	-0.75
25.85	0.0046	-3.17	2.34	0.00	0.00	-0.83
25.86	0.0048	-3.23	2.31	0.00	0.00	-0.92
25.87	0.0049	-3.28	2.27	0.00	0.00	-1.02
25.88	0.0051	-3.33	2.22	0.00	0.00	-1.12
25.89	0.0053	-3.38	2.16	0.00	0.00	-1.23
25.90	0.0055	-3.43	2.10	0.00	0.00	-1.34
25.91	0.0057	-3.48	2.04	0.00	0.00	-1.44
25.92	0.0059	-3.53	1.98	0.00	0.00	-1.56
25.93	0.0061	-3.57	1.91	0.00	0.00	-1.67
25.94	0.0063	-3.62	1.84	0.00	0.00	-1.78
25.95	0.0065	-3.66	1.77	0.00	0.00	-1.90
25.96	0.0067	-3.71	1.70	0.00	0.00	-2.01

25.97	0.0069	-3.75	1.63	-0.01	0.00	-2.13
25.98	0.0071	-3.80	1.56	-0.01	0.00	-2.24
25.99	0.0073	-3.84	1.49	-0.01	0.00	-2.36
26.00	0.0075	-3.88	1.41	-0.01	0.00	-2.48
26.01	0.0073	-3.87	1.48	-0.01	0.00	-2.39
26.02	0.0071	-3.79	1.56	-0.01	0.00	-2.23
26.03	0.0069	-3.75	1.63	-0.01	0.00	-2.12
26.04	0.0067	-3.71	1.70	0.00	0.00	-2.01
26.05	0.0065	-3.66	1.77	0.00	0.00	-1.90
26.06	0.0063	-3.62	1.84	0.00	0.00	-1.78
26.07	0.0061	-3.57	1.91	0.00	0.00	-1.67
26.08	0.0059	-3.53	1.98	0.00	0.00	-1.55
26.09	0.0057	-3.48	2.04	0.00	0.00	-1.44
26.10	0.0055	-3.43	2.10	0.00	0.00	-1.34
26.11	0.0053	-3.38	2.16	0.00	0.00	-1.23
26.12	0.0051	-3.33	2.22	0.00	0.00	-1.12
26.13	0.0049	-3.28	2.27	0.00	0.00	-1.02
26.14	0.0048	-3.23	2.31	0.00	0.00	-0.92
26.15	0.0046	-3.17	2.34	0.00	0.00	-0.83
26.16	0.0044	-3.11	2.37	0.00	0.00	-0.75
26.17	0.0042	-3.04	2.38	0.00	0.00	-0.67
26.18	0.0041	-2.97	2.37	0.00	0.00	-0.61
26.19	0.0039	-2.89	2.34	0.00	0.00	-0.56
26.20	0.0038	-2.80	2.27	0.00	0.00	-0.54
26.21	0.0037	-2.71	2.20	0.00	0.00	-0.52
26.22	0.0035	-2.62	2.13	0.00	0.00	-0.50
26.23	0.0034	-2.53	2.05	0.00	0.00	-0.48
26.24	0.0033	-2.43	1.97	0.00	0.00	-0.46
26.25	0.0032	-2.34	1.90	0.00	0.00	-0.45
26.26	0.0030	-2.25	1.82	0.00	0.00	-0.43
26.27	0.0029	-2.15	1.75	0.00	0.00	-0.41
26.28	0.0028	-2.06	1.67	0.00	0.00	-0.39
26.29	0.0027	-1.96	1.59	0.00	0.00	-0.37
26.30	0.0025	-1.87	1.52	0.00	0.00	-0.36
26.31	0.0024	-1.78	1.44	0.00	0.00	-0.34
26.32	0.0023	-1.68	1.37	0.00	0.00	-0.32
26.33	0.0021	-1.59	1.29	0.00	0.00	-0.30
26.34	0.0020	-1.50	1.21	0.00	0.00	-0.29
26.35	0.0019	-1.40	1.14	0.00	0.00	-0.27
26.36	0.0018	-1.31	1.06	0.00	0.00	-0.25
26.37	0.0016	-1.22	0.99	0.00	0.00	-0.23
26.38	0.0015	-1.12	0.91	0.00	0.00	-0.21
26.39	0.0014	-1.03	0.83	0.00	0.00	-0.20
26.40	0.0013	-0.93	0.76	0.00	0.00	-0.18
26.41	0.0011	-0.84	0.68	0.00	0.00	-0.16
26.42	0.0010	-0.75	0.61	0.00	0.00	-0.14
26.43	0.0009	-0.65	0.53	0.00	0.00	-0.13
26.44	0.0008	-0.56	0.45	0.00	0.00	-0.11
26.45	0.0006	-0.47	0.38	0.00	0.00	-0.09
26.46	0.0005	-0.37	0.30	0.00	0.00	-0.07
26.47	0.0004	-0.29	0.24	0.00	0.00	-0.05
26.48	0.0003	-0.23	0.20	0.00	0.00	-0.04
26.49	0.0001	-0.18	0.16	0.00	0.00	-0.02
26.50	0.0000	-0.16	0.16	0.00	0.00	0.00
26.51	-0.0001	-0.16	0.18	0.00	0.00	0.02
26.52	-0.0003	-0.20	0.23	0.00	0.00	0.03
26.53	-0.0004	-0.24	0.29	0.00	0.00	0.05

26.54	-0.0005	-0.30	0.37	0.00	0.00	0.07
26.55	-0.0006	-0.38	0.47	0.00	0.00	0.09
26.56	-0.0008	-0.45	0.56	0.00	0.00	0.10
26.57	-0.0009	-0.53	0.65	0.00	0.00	0.12
26.58	-0.0010	-0.61	0.75	0.00	0.00	0.14
26.59	-0.0011	-0.68	0.84	0.00	0.00	0.16
26.60	-0.0013	-0.76	0.93	0.00	0.00	0.18
26.61	-0.0014	-0.83	1.03	0.00	0.00	0.19
26.62	-0.0015	-0.91	1.12	0.00	0.00	0.21
26.63	-0.0016	-0.99	1.22	0.00	0.00	0.23
26.64	-0.0018	-1.06	1.31	0.00	0.00	0.24
26.65	-0.0019	-1.14	1.40	0.00	0.00	0.26
26.66	-0.0020	-1.21	1.50	0.00	0.00	0.28
26.67	-0.0021	-1.29	1.59	0.00	0.00	0.30
26.68	-0.0023	-1.37	1.68	0.00	0.00	0.31
26.69	-0.0024	-1.44	1.78	0.00	0.00	0.33
26.70	-0.0025	-1.52	1.87	0.00	0.00	0.35
26.71	-0.0027	-1.59	1.96	0.00	0.00	0.37
26.72	-0.0028	-1.67	2.06	0.00	0.00	0.38
26.73	-0.0029	-1.75	2.15	0.00	0.00	0.40
26.74	-0.0030	-1.82	2.25	0.00	0.00	0.42
26.75	-0.0032	-1.90	2.34	0.00	0.00	0.44
26.76	-0.0033	-1.97	2.43	0.00	0.00	0.45
26.77	-0.0034	-2.05	2.53	0.00	0.00	0.47
26.78	-0.0035	-2.13	2.62	0.00	0.00	0.49
26.79	-0.0037	-2.20	2.71	0.00	0.00	0.50
26.80	-0.0038	-2.28	2.81	0.00	0.00	0.52
26.81	-0.0039	-2.34	2.89	0.00	0.00	0.55
26.82	-0.0041	-2.37	2.97	0.00	0.00	0.60
26.83	-0.0042	-2.37	3.04	0.00	0.00	0.66
26.84	-0.0044	-2.37	3.11	0.00	0.00	0.74
26.85	-0.0046	-2.34	3.17	0.00	0.00	0.82
26.86	-0.0048	-2.31	3.23	0.00	0.00	0.91
26.87	-0.0049	-2.27	3.28	0.00	0.00	1.01
26.88	-0.0051	-2.22	3.33	0.00	0.00	1.11
26.89	-0.0053	-2.16	3.38	0.00	0.00	1.21
26.90	-0.0055	-2.10	3.43	0.00	0.00	1.32
26.91	-0.0057	-2.04	3.48	0.00	0.00	1.43
26.92	-0.0059	-1.98	3.53	0.00	0.00	1.54
26.93	-0.0061	-1.91	3.57	0.00	0.00	1.65
26.94	-0.0063	-1.84	3.62	0.00	0.00	1.77
26.95	-0.0065	-1.77	3.66	0.00	0.00	1.88
26.96	-0.0067	-1.70	3.71	0.00	0.00	2.00
26.97	-0.0069	-1.63	3.75	0.00	-0.01	2.11
26.98	-0.0071	-1.56	3.80	0.00	-0.01	2.23
26.99	-0.0073	-1.49	3.84	0.00	-0.01	2.35
27.00	-0.0075	-1.41	3.88	0.00	-0.01	2.46
27.01	-0.0073	-1.48	3.87	0.00	-0.01	2.38
27.02	-0.0071	-1.56	3.79	0.00	-0.01	2.22
27.03	-0.0069	-1.63	3.75	0.00	-0.01	2.11
27.04	-0.0067	-1.70	3.71	0.00	0.00	2.00
27.05	-0.0065	-1.77	3.66	0.00	0.00	1.88
27.06	-0.0063	-1.84	3.62	0.00	0.00	1.77
27.07	-0.0061	-1.91	3.57	0.00	0.00	1.66
27.08	-0.0059	-1.98	3.53	0.00	0.00	1.54
27.09	-0.0057	-2.04	3.48	0.00	0.00	1.43
27.10	-0.0055	-2.10	3.43	0.00	0.00	1.32

27.11	-0.0053	-2.16	3.38	0.00	0.00	1.21
27.12	-0.0051	-2.22	3.33	0.00	0.00	1.11
27.13	-0.0049	-2.27	3.28	0.00	0.00	1.01
27.14	-0.0048	-2.31	3.23	0.00	0.00	0.91
27.15	-0.0046	-2.34	3.17	0.00	0.00	0.82
27.16	-0.0044	-2.37	3.11	0.00	0.00	0.74
27.17	-0.0042	-2.38	3.04	0.00	0.00	0.66
27.18	-0.0041	-2.37	2.97	0.00	0.00	0.60
27.19	-0.0039	-2.34	2.89	0.00	0.00	0.55
27.20	-0.0038	-2.27	2.80	0.00	0.00	0.52
27.21	-0.0037	-2.20	2.71	0.00	0.00	0.51
27.22	-0.0035	-2.13	2.62	0.00	0.00	0.49
27.23	-0.0034	-2.05	2.53	0.00	0.00	0.47
27.24	-0.0033	-1.97	2.43	0.00	0.00	0.45
27.25	-0.0032	-1.90	2.34	0.00	0.00	0.44
27.26	-0.0030	-1.82	2.25	0.00	0.00	0.42
27.27	-0.0029	-1.75	2.15	0.00	0.00	0.40
27.28	-0.0028	-1.67	2.06	0.00	0.00	0.38
27.29	-0.0027	-1.59	1.96	0.00	0.00	0.37
27.30	-0.0025	-1.52	1.87	0.00	0.00	0.35
27.31	-0.0024	-1.44	1.78	0.00	0.00	0.33
27.32	-0.0023	-1.37	1.68	0.00	0.00	0.31
27.33	-0.0021	-1.29	1.59	0.00	0.00	0.30
27.34	-0.0020	-1.21	1.50	0.00	0.00	0.28
27.35	-0.0019	-1.14	1.40	0.00	0.00	0.26
27.36	-0.0018	-1.06	1.31	0.00	0.00	0.24
27.37	-0.0016	-0.99	1.22	0.00	0.00	0.23
27.38	-0.0015	-0.91	1.12	0.00	0.00	0.21
27.39	-0.0014	-0.83	1.03	0.00	0.00	0.19
27.40	-0.0013	-0.76	0.93	0.00	0.00	0.18
27.41	-0.0011	-0.68	0.84	0.00	0.00	0.16
27.42	-0.0010	-0.61	0.75	0.00	0.00	0.14
27.43	-0.0009	-0.53	0.65	0.00	0.00	0.12
27.44	-0.0008	-0.45	0.56	0.00	0.00	0.10
27.45	-0.0006	-0.38	0.47	0.00	0.00	0.09
27.46	-0.0005	-0.30	0.37	0.00	0.00	0.07
27.47	-0.0004	-0.24	0.29	0.00	0.00	0.05
27.48	-0.0003	-0.20	0.23	0.00	0.00	0.03
27.49	-0.0001	-0.16	0.18	0.00	0.00	0.02
27.50	0.0000	-0.16	0.16	0.00	0.00	0.00
27.51	0.0001	-0.18	0.16	0.00	0.00	-0.02
27.52	0.0003	-0.23	0.20	0.00	0.00	-0.04
27.53	0.0004	-0.29	0.24	0.00	0.00	-0.05
27.54	0.0005	-0.37	0.30	0.00	0.00	-0.07
27.55	0.0006	-0.47	0.38	0.00	0.00	-0.09
27.56	0.0008	-0.56	0.45	0.00	0.00	-0.11
27.57	0.0009	-0.65	0.53	0.00	0.00	-0.13
27.58	0.0010	-0.75	0.61	0.00	0.00	-0.14
27.59	0.0011	-0.84	0.68	0.00	0.00	-0.16
27.60	0.0013	-0.93	0.76	0.00	0.00	-0.18
27.61	0.0014	-1.03	0.83	0.00	0.00	-0.20
27.62	0.0015	-1.12	0.91	0.00	0.00	-0.21
27.63	0.0016	-1.22	0.99	0.00	0.00	-0.23
27.64	0.0018	-1.31	1.06	0.00	0.00	-0.25
27.65	0.0019	-1.40	1.14	0.00	0.00	-0.27
27.66	0.0020	-1.50	1.21	0.00	0.00	-0.29
27.67	0.0021	-1.59	1.29	0.00	0.00	-0.30

27.68	0.0023	-1.68	1.37	0.00	0.00	-0.32
27.69	0.0024	-1.78	1.44	0.00	0.00	-0.34
27.70	0.0025	-1.87	1.52	0.00	0.00	-0.36
27.71	0.0027	-1.96	1.59	0.00	0.00	-0.37
27.72	0.0028	-2.06	1.67	0.00	0.00	-0.39
27.73	0.0029	-2.15	1.75	0.00	0.00	-0.41
27.74	0.0030	-2.25	1.82	0.00	0.00	-0.43
27.75	0.0032	-2.34	1.90	0.00	0.00	-0.45
27.76	0.0033	-2.43	1.97	0.00	0.00	-0.46
27.77	0.0034	-2.53	2.05	0.00	0.00	-0.48
27.78	0.0035	-2.62	2.13	0.00	0.00	-0.50
27.79	0.0037	-2.71	2.20	0.00	0.00	-0.52
27.80	0.0038	-2.81	2.28	0.00	0.00	-0.53
27.81	0.0039	-2.89	2.34	0.00	0.00	-0.56
27.82	0.0041	-2.97	2.37	0.00	0.00	-0.61
27.83	0.0042	-3.04	2.37	0.00	0.00	-0.68
27.84	0.0044	-3.11	2.37	0.00	0.00	-0.75
27.85	0.0046	-3.17	2.34	0.00	0.00	-0.83
27.86	0.0048	-3.23	2.31	0.00	0.00	-0.92
27.87	0.0049	-3.28	2.27	0.00	0.00	-1.02
27.88	0.0051	-3.33	2.22	0.00	0.00	-1.12
27.89	0.0053	-3.38	2.16	0.00	0.00	-1.23
27.90	0.0055	-3.43	2.10	0.00	0.00	-1.34
27.91	0.0057	-3.48	2.04	0.00	0.00	-1.44
27.92	0.0059	-3.53	1.98	0.00	0.00	-1.56
27.93	0.0061	-3.57	1.91	0.00	0.00	-1.67
27.94	0.0063	-3.62	1.84	0.00	0.00	-1.78
27.95	0.0065	-3.66	1.77	0.00	0.00	-1.90
27.96	0.0067	-3.71	1.70	0.00	0.00	-2.01
27.97	0.0069	-3.75	1.63	-0.01	0.00	-2.13
27.98	0.0071	-3.80	1.56	-0.01	0.00	-2.24
27.99	0.0073	-3.84	1.49	-0.01	0.00	-2.36
28.00	0.0075	-3.88	1.41	-0.01	0.00	-2.48
28.01	0.0073	-3.87	1.48	-0.01	0.00	-2.39
28.02	0.0071	-3.79	1.56	-0.01	0.00	-2.23
28.03	0.0069	-3.75	1.63	-0.01	0.00	-2.12
28.04	0.0067	-3.71	1.70	0.00	0.00	-2.01
28.05	0.0065	-3.66	1.77	0.00	0.00	-1.90
28.06	0.0063	-3.62	1.84	0.00	0.00	-1.78
28.07	0.0061	-3.57	1.91	0.00	0.00	-1.67
28.08	0.0059	-3.53	1.98	0.00	0.00	-1.55
28.09	0.0057	-3.48	2.04	0.00	0.00	-1.44
28.10	0.0055	-3.43	2.10	0.00	0.00	-1.34
28.11	0.0053	-3.38	2.16	0.00	0.00	-1.23
28.12	0.0051	-3.33	2.22	0.00	0.00	-1.12
28.13	0.0049	-3.28	2.27	0.00	0.00	-1.02
28.14	0.0048	-3.23	2.31	0.00	0.00	-0.92
28.15	0.0046	-3.17	2.34	0.00	0.00	-0.83
28.16	0.0044	-3.11	2.37	0.00	0.00	-0.75
28.17	0.0042	-3.04	2.38	0.00	0.00	-0.67
28.18	0.0041	-2.97	2.37	0.00	0.00	-0.61
28.19	0.0039	-2.89	2.34	0.00	0.00	-0.56
28.20	0.0038	-2.80	2.27	0.00	0.00	-0.54
28.21	0.0037	-2.71	2.20	0.00	0.00	-0.52
28.22	0.0035	-2.62	2.13	0.00	0.00	-0.50
28.23	0.0034	-2.53	2.05	0.00	0.00	-0.48
28.24	0.0033	-2.43	1.97	0.00	0.00	-0.46

28.25	0.0032	-2.34	1.90	0.00	0.00	-0.45
28.26	0.0030	-2.25	1.82	0.00	0.00	-0.43
28.27	0.0029	-2.15	1.75	0.00	0.00	-0.41
28.28	0.0028	-2.06	1.67	0.00	0.00	-0.39
28.29	0.0027	-1.96	1.59	0.00	0.00	-0.37
28.30	0.0025	-1.87	1.52	0.00	0.00	-0.36
28.31	0.0024	-1.78	1.44	0.00	0.00	-0.34
28.32	0.0023	-1.68	1.37	0.00	0.00	-0.32
28.33	0.0021	-1.59	1.29	0.00	0.00	-0.30
28.34	0.0020	-1.50	1.21	0.00	0.00	-0.29
28.35	0.0019	-1.40	1.14	0.00	0.00	-0.27
28.36	0.0018	-1.31	1.06	0.00	0.00	-0.25
28.37	0.0016	-1.22	0.99	0.00	0.00	-0.23
28.38	0.0015	-1.12	0.91	0.00	0.00	-0.21
28.39	0.0014	-1.03	0.83	0.00	0.00	-0.20
28.40	0.0013	-0.93	0.76	0.00	0.00	-0.18
28.41	0.0011	-0.84	0.68	0.00	0.00	-0.16
28.42	0.0010	-0.75	0.61	0.00	0.00	-0.14
28.43	0.0009	-0.65	0.53	0.00	0.00	-0.13
28.44	0.0008	-0.56	0.45	0.00	0.00	-0.11
28.45	0.0006	-0.47	0.38	0.00	0.00	-0.09
28.46	0.0005	-0.37	0.30	0.00	0.00	-0.07
28.47	0.0004	-0.29	0.24	0.00	0.00	-0.05
28.48	0.0003	-0.23	0.20	0.00	0.00	-0.04
28.49	0.0001	-0.18	0.16	0.00	0.00	-0.02
28.50	0.0000	-0.16	0.16	0.00	0.00	0.00
28.51	-0.0001	-0.16	0.18	0.00	0.00	0.02
28.52	-0.0003	-0.20	0.23	0.00	0.00	0.03
28.53	-0.0004	-0.24	0.29	0.00	0.00	0.05
28.54	-0.0005	-0.30	0.37	0.00	0.00	0.07
28.55	-0.0006	-0.38	0.47	0.00	0.00	0.09
28.56	-0.0008	-0.45	0.56	0.00	0.00	0.10
28.57	-0.0009	-0.53	0.65	0.00	0.00	0.12
28.58	-0.0010	-0.61	0.75	0.00	0.00	0.14
28.59	-0.0011	-0.68	0.84	0.00	0.00	0.16
28.60	-0.0013	-0.76	0.93	0.00	0.00	0.18
28.61	-0.0014	-0.83	1.03	0.00	0.00	0.19
28.62	-0.0015	-0.91	1.12	0.00	0.00	0.21
28.63	-0.0016	-0.99	1.22	0.00	0.00	0.23
28.64	-0.0018	-1.06	1.31	0.00	0.00	0.24
28.65	-0.0019	-1.14	1.40	0.00	0.00	0.26
28.66	-0.0020	-1.21	1.50	0.00	0.00	0.28
28.67	-0.0021	-1.29	1.59	0.00	0.00	0.30
28.68	-0.0023	-1.37	1.68	0.00	0.00	0.31
28.69	-0.0024	-1.44	1.78	0.00	0.00	0.33
28.70	-0.0025	-1.52	1.87	0.00	0.00	0.35
28.71	-0.0027	-1.59	1.96	0.00	0.00	0.37
28.72	-0.0028	-1.67	2.06	0.00	0.00	0.38
28.73	-0.0029	-1.75	2.15	0.00	0.00	0.40
28.74	-0.0030	-1.82	2.25	0.00	0.00	0.42
28.75	-0.0032	-1.90	2.34	0.00	0.00	0.44
28.76	-0.0033	-1.97	2.43	0.00	0.00	0.45
28.77	-0.0034	-2.05	2.53	0.00	0.00	0.47
28.78	-0.0035	-2.13	2.62	0.00	0.00	0.49
28.79	-0.0037	-2.20	2.71	0.00	0.00	0.50
28.80	-0.0038	-2.28	2.81	0.00	0.00	0.52
28.81	-0.0039	-2.34	2.89	0.00	0.00	0.55

28.82	-0.0041	-2.37	2.97	0.00	0.00	0.60
28.83	-0.0042	-2.37	3.04	0.00	0.00	0.66
28.84	-0.0044	-2.37	3.11	0.00	0.00	0.74
28.85	-0.0046	-2.34	3.17	0.00	0.00	0.82
28.86	-0.0048	-2.31	3.23	0.00	0.00	0.91
28.87	-0.0049	-2.27	3.28	0.00	0.00	1.01
28.88	-0.0051	-2.22	3.33	0.00	0.00	1.11
28.89	-0.0053	-2.16	3.38	0.00	0.00	1.21
28.90	-0.0055	-2.10	3.43	0.00	0.00	1.32
28.91	-0.0057	-2.04	3.48	0.00	0.00	1.43
28.92	-0.0059	-1.98	3.53	0.00	0.00	1.54
28.93	-0.0061	-1.91	3.57	0.00	0.00	1.65
28.94	-0.0063	-1.84	3.62	0.00	0.00	1.77
28.95	-0.0065	-1.77	3.66	0.00	0.00	1.88
28.96	-0.0067	-1.70	3.71	0.00	0.00	2.00
28.97	-0.0069	-1.63	3.75	0.00	-0.01	2.11
28.98	-0.0071	-1.56	3.80	0.00	-0.01	2.23
28.99	-0.0073	-1.49	3.84	0.00	-0.01	2.35
29.00	-0.0075	-1.41	3.88	0.00	-0.01	2.46
29.01	-0.0073	-1.48	3.87	0.00	-0.01	2.38
29.02	-0.0071	-1.56	3.79	0.00	-0.01	2.22
29.03	-0.0069	-1.63	3.75	0.00	-0.01	2.11
29.04	-0.0067	-1.70	3.71	0.00	0.00	2.00
29.05	-0.0065	-1.77	3.66	0.00	0.00	1.88
29.06	-0.0063	-1.84	3.62	0.00	0.00	1.77
29.07	-0.0061	-1.91	3.57	0.00	0.00	1.66
29.08	-0.0059	-1.98	3.53	0.00	0.00	1.54
29.09	-0.0057	-2.04	3.48	0.00	0.00	1.43
29.10	-0.0055	-2.10	3.43	0.00	0.00	1.32
29.11	-0.0053	-2.16	3.38	0.00	0.00	1.21
29.12	-0.0051	-2.22	3.33	0.00	0.00	1.11
29.13	-0.0049	-2.27	3.28	0.00	0.00	1.01
29.14	-0.0048	-2.31	3.23	0.00	0.00	0.91
29.15	-0.0046	-2.34	3.17	0.00	0.00	0.82
29.16	-0.0044	-2.37	3.11	0.00	0.00	0.74
29.17	-0.0042	-2.38	3.04	0.00	0.00	0.66
29.18	-0.0041	-2.37	2.97	0.00	0.00	0.60
29.19	-0.0039	-2.34	2.89	0.00	0.00	0.55
29.20	-0.0038	-2.27	2.80	0.00	0.00	0.52
29.21	-0.0037	-2.20	2.71	0.00	0.00	0.51
29.22	-0.0035	-2.13	2.62	0.00	0.00	0.49
29.23	-0.0034	-2.05	2.53	0.00	0.00	0.47
29.24	-0.0033	-1.97	2.43	0.00	0.00	0.45
29.25	-0.0032	-1.90	2.34	0.00	0.00	0.44
29.26	-0.0030	-1.82	2.25	0.00	0.00	0.42
29.27	-0.0029	-1.75	2.15	0.00	0.00	0.40
29.28	-0.0028	-1.67	2.06	0.00	0.00	0.38
29.29	-0.0027	-1.59	1.96	0.00	0.00	0.37
29.30	-0.0025	-1.52	1.87	0.00	0.00	0.35
29.31	-0.0024	-1.44	1.78	0.00	0.00	0.33
29.32	-0.0023	-1.37	1.68	0.00	0.00	0.31
29.33	-0.0021	-1.29	1.59	0.00	0.00	0.30
29.34	-0.0020	-1.21	1.50	0.00	0.00	0.28
29.35	-0.0019	-1.14	1.40	0.00	0.00	0.26
29.36	-0.0018	-1.06	1.31	0.00	0.00	0.24
29.37	-0.0016	-0.99	1.22	0.00	0.00	0.23
29.38	-0.0015	-0.91	1.12	0.00	0.00	0.21

29.39	-0.0014	-0.83	1.03	0.00	0.00	0.19
29.40	-0.0013	-0.76	0.93	0.00	0.00	0.18
29.41	-0.0011	-0.68	0.84	0.00	0.00	0.16
29.42	-0.0010	-0.61	0.75	0.00	0.00	0.14
29.43	-0.0009	-0.53	0.65	0.00	0.00	0.12
29.44	-0.0008	-0.45	0.56	0.00	0.00	0.10
29.45	-0.0006	-0.38	0.47	0.00	0.00	0.09
29.46	-0.0005	-0.30	0.37	0.00	0.00	0.07
29.47	-0.0004	-0.24	0.29	0.00	0.00	0.05
29.48	-0.0003	-0.20	0.23	0.00	0.00	0.03
29.49	-0.0001	-0.16	0.18	0.00	0.00	0.02
29.50	0.0000	-0.16	0.16	0.00	0.00	0.00
29.51	0.0001	-0.18	0.16	0.00	0.00	-0.02
29.52	0.0003	-0.23	0.20	0.00	0.00	-0.04
29.53	0.0004	-0.29	0.24	0.00	0.00	-0.05
29.54	0.0005	-0.37	0.30	0.00	0.00	-0.07
29.55	0.0006	-0.47	0.38	0.00	0.00	-0.09
29.56	0.0008	-0.56	0.45	0.00	0.00	-0.11
29.57	0.0009	-0.65	0.53	0.00	0.00	-0.13
29.58	0.0010	-0.75	0.61	0.00	0.00	-0.14
29.59	0.0011	-0.84	0.68	0.00	0.00	-0.16
29.60	0.0013	-0.93	0.76	0.00	0.00	-0.18
29.61	0.0014	-1.03	0.83	0.00	0.00	-0.20
29.62	0.0015	-1.12	0.91	0.00	0.00	-0.21
29.63	0.0016	-1.22	0.99	0.00	0.00	-0.23
29.64	0.0018	-1.31	1.06	0.00	0.00	-0.25
29.65	0.0019	-1.40	1.14	0.00	0.00	-0.27
29.66	0.0020	-1.50	1.21	0.00	0.00	-0.29
29.67	0.0021	-1.59	1.29	0.00	0.00	-0.30
29.68	0.0023	-1.68	1.37	0.00	0.00	-0.32
29.69	0.0024	-1.78	1.44	0.00	0.00	-0.34
29.70	0.0025	-1.87	1.52	0.00	0.00	-0.36
29.71	0.0027	-1.96	1.59	0.00	0.00	-0.37
29.72	0.0028	-2.06	1.67	0.00	0.00	-0.39
29.73	0.0029	-2.15	1.75	0.00	0.00	-0.41
29.74	0.0030	-2.25	1.82	0.00	0.00	-0.43
29.75	0.0032	-2.34	1.90	0.00	0.00	-0.45
29.76	0.0033	-2.43	1.97	0.00	0.00	-0.46
29.77	0.0034	-2.53	2.05	0.00	0.00	-0.48
29.78	0.0035	-2.62	2.13	0.00	0.00	-0.50
29.79	0.0037	-2.71	2.20	0.00	0.00	-0.52
29.80	0.0038	-2.81	2.28	0.00	0.00	-0.53
29.81	0.0039	-2.89	2.34	0.00	0.00	-0.56
29.82	0.0041	-2.97	2.37	0.00	0.00	-0.61
29.83	0.0042	-3.04	2.37	0.00	0.00	-0.68
29.84	0.0044	-3.11	2.37	0.00	0.00	-0.75
29.85	0.0046	-3.17	2.34	0.00	0.00	-0.83
29.86	0.0048	-3.23	2.31	0.00	0.00	-0.92
29.87	0.0049	-3.28	2.27	0.00	0.00	-1.02
29.88	0.0051	-3.33	2.22	0.00	0.00	-1.12
29.89	0.0053	-3.38	2.16	0.00	0.00	-1.23
29.90	0.0055	-3.43	2.10	0.00	0.00	-1.34
29.91	0.0057	-3.48	2.04	0.00	0.00	-1.44
29.92	0.0059	-3.53	1.98	0.00	0.00	-1.56
29.93	0.0061	-3.57	1.91	0.00	0.00	-1.67
29.94	0.0063	-3.62	1.84	0.00	0.00	-1.78
29.95	0.0065	-3.66	1.77	0.00	0.00	-1.90

29.96	0.0067	-3.71	1.70	0.00	0.00	-2.01
29.97	0.0069	-3.75	1.63	-0.01	0.00	-2.13
29.98	0.0071	-3.80	1.56	-0.01	0.00	-2.24
29.99	0.0073	-3.84	1.49	-0.01	0.00	-2.36
30.00	0.0075	-3.88	1.41	-0.01	0.00	-2.48
30.01	0.0073	-3.87	1.48	-0.01	0.00	-2.39
30.02	0.0071	-3.79	1.56	-0.01	0.00	-2.23
30.03	0.0069	-3.75	1.63	-0.01	0.00	-2.12
30.04	0.0067	-3.71	1.70	0.00	0.00	-2.01
30.05	0.0065	-3.66	1.77	0.00	0.00	-1.90
30.06	0.0063	-3.62	1.84	0.00	0.00	-1.78
30.07	0.0061	-3.57	1.91	0.00	0.00	-1.67
30.08	0.0059	-3.53	1.98	0.00	0.00	-1.55
30.09	0.0057	-3.48	2.04	0.00	0.00	-1.44
30.10	0.0055	-3.43	2.10	0.00	0.00	-1.34
30.11	0.0053	-3.38	2.16	0.00	0.00	-1.23
30.12	0.0051	-3.33	2.22	0.00	0.00	-1.12
30.13	0.0049	-3.28	2.27	0.00	0.00	-1.02
30.14	0.0048	-3.23	2.31	0.00	0.00	-0.92
30.15	0.0046	-3.17	2.34	0.00	0.00	-0.83
30.16	0.0044	-3.11	2.37	0.00	0.00	-0.75
30.17	0.0042	-3.04	2.38	0.00	0.00	-0.67
30.18	0.0041	-2.97	2.37	0.00	0.00	-0.61
30.19	0.0039	-2.89	2.34	0.00	0.00	-0.56
30.20	0.0038	-2.80	2.27	0.00	0.00	-0.54
30.21	0.0037	-2.71	2.20	0.00	0.00	-0.52
30.22	0.0035	-2.62	2.13	0.00	0.00	-0.50
30.23	0.0034	-2.53	2.05	0.00	0.00	-0.48
30.24	0.0033	-2.43	1.97	0.00	0.00	-0.46
30.25	0.0032	-2.34	1.90	0.00	0.00	-0.45
30.26	0.0030	-2.25	1.82	0.00	0.00	-0.43
30.27	0.0029	-2.15	1.75	0.00	0.00	-0.41
30.28	0.0028	-2.06	1.67	0.00	0.00	-0.39
30.29	0.0027	-1.96	1.59	0.00	0.00	-0.37
30.30	0.0025	-1.87	1.52	0.00	0.00	-0.36
30.31	0.0024	-1.78	1.44	0.00	0.00	-0.34
30.32	0.0023	-1.68	1.37	0.00	0.00	-0.32
30.33	0.0021	-1.59	1.29	0.00	0.00	-0.30
30.34	0.0020	-1.50	1.21	0.00	0.00	-0.29
30.35	0.0019	-1.40	1.14	0.00	0.00	-0.27
30.36	0.0018	-1.31	1.06	0.00	0.00	-0.25
30.37	0.0016	-1.22	0.99	0.00	0.00	-0.23
30.38	0.0015	-1.12	0.91	0.00	0.00	-0.21
30.39	0.0014	-1.03	0.83	0.00	0.00	-0.20
30.40	0.0013	-0.93	0.76	0.00	0.00	-0.18
30.41	0.0011	-0.84	0.68	0.00	0.00	-0.16
30.42	0.0010	-0.75	0.61	0.00	0.00	-0.14
30.43	0.0009	-0.65	0.53	0.00	0.00	-0.13
30.44	0.0008	-0.56	0.45	0.00	0.00	-0.11
30.45	0.0006	-0.47	0.38	0.00	0.00	-0.09
30.46	0.0005	-0.37	0.30	0.00	0.00	-0.07
30.47	0.0004	-0.29	0.24	0.00	0.00	-0.05
30.48	0.0003	-0.23	0.20	0.00	0.00	-0.04
30.49	0.0001	-0.18	0.16	0.00	0.00	-0.02
30.50	0.0000	-0.16	0.16	0.00	0.00	0.00
30.51	-0.0001	-0.16	0.18	0.00	0.00	0.02
30.52	-0.0003	-0.20	0.23	0.00	0.00	0.03

30.53	-0.0004	-0.24	0.29	0.00	0.00	0.05
30.54	-0.0005	-0.30	0.37	0.00	0.00	0.07
30.55	-0.0006	-0.38	0.47	0.00	0.00	0.09
30.56	-0.0008	-0.45	0.56	0.00	0.00	0.10
30.57	-0.0009	-0.53	0.65	0.00	0.00	0.12
30.58	-0.0010	-0.61	0.75	0.00	0.00	0.14
30.59	-0.0011	-0.68	0.84	0.00	0.00	0.16
30.60	-0.0013	-0.76	0.93	0.00	0.00	0.18
30.61	-0.0014	-0.83	1.03	0.00	0.00	0.19
30.62	-0.0015	-0.91	1.12	0.00	0.00	0.21
30.63	-0.0016	-0.99	1.22	0.00	0.00	0.23
30.64	-0.0018	-1.06	1.31	0.00	0.00	0.24
30.65	-0.0019	-1.14	1.40	0.00	0.00	0.26
30.66	-0.0020	-1.21	1.50	0.00	0.00	0.28
30.67	-0.0021	-1.29	1.59	0.00	0.00	0.30
30.68	-0.0023	-1.37	1.68	0.00	0.00	0.31
30.69	-0.0024	-1.44	1.78	0.00	0.00	0.33
30.70	-0.0025	-1.52	1.87	0.00	0.00	0.35
30.71	-0.0027	-1.59	1.96	0.00	0.00	0.37
30.72	-0.0028	-1.67	2.06	0.00	0.00	0.38
30.73	-0.0029	-1.75	2.15	0.00	0.00	0.40
30.74	-0.0030	-1.82	2.25	0.00	0.00	0.42
30.75	-0.0032	-1.90	2.34	0.00	0.00	0.44
30.76	-0.0033	-1.97	2.43	0.00	0.00	0.45
30.77	-0.0034	-2.05	2.53	0.00	0.00	0.47
30.78	-0.0035	-2.13	2.62	0.00	0.00	0.49
30.79	-0.0037	-2.20	2.71	0.00	0.00	0.50
30.80	-0.0038	-2.28	2.81	0.00	0.00	0.52
30.81	-0.0039	-2.34	2.89	0.00	0.00	0.55
30.82	-0.0041	-2.37	2.97	0.00	0.00	0.60
30.83	-0.0042	-2.37	3.04	0.00	0.00	0.66
30.84	-0.0044	-2.37	3.11	0.00	0.00	0.74
30.85	-0.0046	-2.34	3.17	0.00	0.00	0.82
30.86	-0.0048	-2.31	3.23	0.00	0.00	0.91
30.87	-0.0049	-2.27	3.28	0.00	0.00	1.01
30.88	-0.0051	-2.22	3.33	0.00	0.00	1.11
30.89	-0.0053	-2.16	3.38	0.00	0.00	1.21
30.90	-0.0055	-2.10	3.43	0.00	0.00	1.32
30.91	-0.0057	-2.04	3.48	0.00	0.00	1.43
30.92	-0.0059	-1.98	3.53	0.00	0.00	1.54
30.93	-0.0061	-1.91	3.57	0.00	0.00	1.65
30.94	-0.0063	-1.84	3.62	0.00	0.00	1.77
30.95	-0.0065	-1.77	3.66	0.00	0.00	1.88
30.96	-0.0067	-1.70	3.71	0.00	0.00	2.00
30.97	-0.0069	-1.63	3.75	0.00	-0.01	2.11
30.98	-0.0071	-1.56	3.80	0.00	-0.01	2.23
30.99	-0.0073	-1.49	3.84	0.00	-0.01	2.35
31.00	-0.0075	-1.41	3.88	0.00	-0.01	2.46
31.01	-0.0073	-1.48	3.87	0.00	-0.01	2.38
31.02	-0.0071	-1.56	3.79	0.00	-0.01	2.22
31.03	-0.0069	-1.63	3.75	0.00	-0.01	2.11
31.04	-0.0067	-1.70	3.71	0.00	0.00	2.00
31.05	-0.0065	-1.77	3.66	0.00	0.00	1.88
31.06	-0.0063	-1.84	3.62	0.00	0.00	1.77
31.07	-0.0061	-1.91	3.57	0.00	0.00	1.66
31.08	-0.0059	-1.98	3.53	0.00	0.00	1.54
31.09	-0.0057	-2.04	3.48	0.00	0.00	1.43

31.10	-0.0055	-2.10	3.43	0.00	0.00	1.32
31.11	-0.0053	-2.16	3.38	0.00	0.00	1.21
31.12	-0.0051	-2.22	3.33	0.00	0.00	1.11
31.13	-0.0049	-2.27	3.28	0.00	0.00	1.01
31.14	-0.0048	-2.31	3.23	0.00	0.00	0.91
31.15	-0.0046	-2.34	3.17	0.00	0.00	0.82
31.16	-0.0044	-2.37	3.11	0.00	0.00	0.74
31.17	-0.0042	-2.38	3.04	0.00	0.00	0.66
31.18	-0.0041	-2.37	2.97	0.00	0.00	0.60
31.19	-0.0039	-2.34	2.89	0.00	0.00	0.55
31.20	-0.0038	-2.27	2.80	0.00	0.00	0.52
31.21	-0.0037	-2.20	2.71	0.00	0.00	0.51
31.22	-0.0035	-2.13	2.62	0.00	0.00	0.49
31.23	-0.0034	-2.05	2.53	0.00	0.00	0.47
31.24	-0.0033	-1.97	2.43	0.00	0.00	0.45
31.25	-0.0032	-1.90	2.34	0.00	0.00	0.44
31.26	-0.0030	-1.82	2.25	0.00	0.00	0.42
31.27	-0.0029	-1.75	2.15	0.00	0.00	0.40
31.28	-0.0028	-1.67	2.06	0.00	0.00	0.38
31.29	-0.0027	-1.59	1.96	0.00	0.00	0.37
31.30	-0.0025	-1.52	1.87	0.00	0.00	0.35
31.31	-0.0024	-1.44	1.78	0.00	0.00	0.33
31.32	-0.0023	-1.37	1.68	0.00	0.00	0.31
31.33	-0.0021	-1.29	1.59	0.00	0.00	0.30
31.34	-0.0020	-1.21	1.50	0.00	0.00	0.28
31.35	-0.0019	-1.14	1.40	0.00	0.00	0.26
31.36	-0.0018	-1.06	1.31	0.00	0.00	0.24
31.37	-0.0016	-0.99	1.22	0.00	0.00	0.23
31.38	-0.0015	-0.91	1.12	0.00	0.00	0.21
31.39	-0.0014	-0.83	1.03	0.00	0.00	0.19
31.40	-0.0013	-0.76	0.93	0.00	0.00	0.18
31.41	-0.0011	-0.68	0.84	0.00	0.00	0.16
31.42	-0.0010	-0.61	0.75	0.00	0.00	0.14
31.43	-0.0009	-0.53	0.65	0.00	0.00	0.12
31.44	-0.0008	-0.45	0.56	0.00	0.00	0.10
31.45	-0.0006	-0.38	0.47	0.00	0.00	0.09
31.46	-0.0005	-0.30	0.37	0.00	0.00	0.07
31.47	-0.0004	-0.24	0.29	0.00	0.00	0.05
31.48	-0.0003	-0.20	0.23	0.00	0.00	0.03
31.49	-0.0001	-0.16	0.18	0.00	0.00	0.02
31.50	0.0000	-0.16	0.16	0.00	0.00	0.00
31.51	0.0001	-0.18	0.16	0.00	0.00	-0.02
31.52	0.0003	-0.23	0.20	0.00	0.00	-0.04
31.53	0.0004	-0.29	0.24	0.00	0.00	-0.05
31.54	0.0005	-0.37	0.30	0.00	0.00	-0.07
31.55	0.0006	-0.47	0.38	0.00	0.00	-0.09
31.56	0.0008	-0.56	0.45	0.00	0.00	-0.11
31.57	0.0009	-0.65	0.53	0.00	0.00	-0.13
31.58	0.0010	-0.75	0.61	0.00	0.00	-0.14
31.59	0.0011	-0.84	0.68	0.00	0.00	-0.16
31.60	0.0013	-0.93	0.76	0.00	0.00	-0.18
31.61	0.0014	-1.03	0.83	0.00	0.00	-0.20
31.62	0.0015	-1.12	0.91	0.00	0.00	-0.21
31.63	0.0016	-1.22	0.99	0.00	0.00	-0.23
31.64	0.0018	-1.31	1.06	0.00	0.00	-0.25
31.65	0.0019	-1.40	1.14	0.00	0.00	-0.27
31.66	0.0020	-1.50	1.21	0.00	0.00	-0.29

31.67	0.0021	-1.59	1.29	0.00	0.00	-0.30
31.68	0.0023	-1.68	1.37	0.00	0.00	-0.32
31.69	0.0024	-1.78	1.44	0.00	0.00	-0.34
31.70	0.0025	-1.87	1.52	0.00	0.00	-0.36
31.71	0.0027	-1.96	1.59	0.00	0.00	-0.37
31.72	0.0028	-2.06	1.67	0.00	0.00	-0.39
31.73	0.0029	-2.15	1.75	0.00	0.00	-0.41
31.74	0.0030	-2.25	1.82	0.00	0.00	-0.43
31.75	0.0032	-2.34	1.90	0.00	0.00	-0.45
31.76	0.0033	-2.43	1.97	0.00	0.00	-0.46
31.77	0.0034	-2.53	2.05	0.00	0.00	-0.48
31.78	0.0035	-2.62	2.13	0.00	0.00	-0.50
31.79	0.0037	-2.71	2.20	0.00	0.00	-0.52
31.80	0.0038	-2.81	2.28	0.00	0.00	-0.53
31.81	0.0039	-2.89	2.34	0.00	0.00	-0.56
31.82	0.0041	-2.97	2.37	0.00	0.00	-0.61
31.83	0.0042	-3.04	2.37	0.00	0.00	-0.68
31.84	0.0044	-3.11	2.37	0.00	0.00	-0.75
31.85	0.0046	-3.17	2.34	0.00	0.00	-0.83
31.86	0.0048	-3.23	2.31	0.00	0.00	-0.92
31.87	0.0049	-3.28	2.27	0.00	0.00	-1.02
31.88	0.0051	-3.33	2.22	0.00	0.00	-1.12
31.89	0.0053	-3.38	2.16	0.00	0.00	-1.23
31.90	0.0055	-3.43	2.10	0.00	0.00	-1.34
31.91	0.0057	-3.48	2.04	0.00	0.00	-1.44
31.92	0.0059	-3.53	1.98	0.00	0.00	-1.56
31.93	0.0061	-3.57	1.91	0.00	0.00	-1.67
31.94	0.0063	-3.62	1.84	0.00	0.00	-1.78
31.95	0.0065	-3.66	1.77	0.00	0.00	-1.90
31.96	0.0067	-3.71	1.70	0.00	0.00	-2.01
31.97	0.0069	-3.75	1.63	-0.01	0.00	-2.13
31.98	0.0071	-3.80	1.56	-0.01	0.00	-2.24
31.99	0.0073	-3.84	1.49	-0.01	0.00	-2.36
32.00	0.0075	-3.88	1.41	-0.01	0.00	-2.48
32.01	0.0073	-3.87	1.48	-0.01	0.00	-2.39
32.02	0.0071	-3.79	1.56	-0.01	0.00	-2.23
32.03	0.0069	-3.75	1.63	-0.01	0.00	-2.12
32.04	0.0067	-3.71	1.70	0.00	0.00	-2.01
32.05	0.0065	-3.66	1.77	0.00	0.00	-1.90
32.06	0.0063	-3.62	1.84	0.00	0.00	-1.78
32.07	0.0061	-3.57	1.91	0.00	0.00	-1.67
32.08	0.0059	-3.53	1.98	0.00	0.00	-1.55
32.09	0.0057	-3.48	2.04	0.00	0.00	-1.44
32.10	0.0055	-3.43	2.10	0.00	0.00	-1.34
32.11	0.0053	-3.38	2.16	0.00	0.00	-1.23
32.12	0.0051	-3.33	2.22	0.00	0.00	-1.12
32.13	0.0049	-3.28	2.27	0.00	0.00	-1.02
32.14	0.0048	-3.23	2.31	0.00	0.00	-0.92
32.15	0.0046	-3.17	2.34	0.00	0.00	-0.83
32.16	0.0044	-3.11	2.37	0.00	0.00	-0.75
32.17	0.0042	-3.04	2.38	0.00	0.00	-0.67
32.18	0.0041	-2.97	2.37	0.00	0.00	-0.61
32.19	0.0039	-2.89	2.34	0.00	0.00	-0.56
32.20	0.0038	-2.80	2.27	0.00	0.00	-0.54
32.21	0.0037	-2.71	2.20	0.00	0.00	-0.52
32.22	0.0035	-2.62	2.13	0.00	0.00	-0.50
32.23	0.0034	-2.53	2.05	0.00	0.00	-0.48

32.24	0.0033	-2.43	1.97	0.00	0.00	-0.46
32.25	0.0032	-2.34	1.90	0.00	0.00	-0.45
32.26	0.0030	-2.25	1.82	0.00	0.00	-0.43
32.27	0.0029	-2.15	1.75	0.00	0.00	-0.41
32.28	0.0028	-2.06	1.67	0.00	0.00	-0.39
32.29	0.0027	-1.96	1.59	0.00	0.00	-0.37
32.30	0.0025	-1.87	1.52	0.00	0.00	-0.36
32.31	0.0024	-1.78	1.44	0.00	0.00	-0.34
32.32	0.0023	-1.68	1.37	0.00	0.00	-0.32
32.33	0.0021	-1.59	1.29	0.00	0.00	-0.30
32.34	0.0020	-1.50	1.21	0.00	0.00	-0.29
32.35	0.0019	-1.40	1.14	0.00	0.00	-0.27
32.36	0.0018	-1.31	1.06	0.00	0.00	-0.25
32.37	0.0016	-1.22	0.99	0.00	0.00	-0.23
32.38	0.0015	-1.12	0.91	0.00	0.00	-0.21
32.39	0.0014	-1.03	0.83	0.00	0.00	-0.20
32.40	0.0013	-0.93	0.76	0.00	0.00	-0.18
32.41	0.0011	-0.84	0.68	0.00	0.00	-0.16
32.42	0.0010	-0.75	0.61	0.00	0.00	-0.14
32.43	0.0009	-0.65	0.53	0.00	0.00	-0.13
32.44	0.0008	-0.56	0.45	0.00	0.00	-0.11
32.45	0.0006	-0.47	0.38	0.00	0.00	-0.09
32.46	0.0005	-0.37	0.30	0.00	0.00	-0.07
32.47	0.0004	-0.29	0.24	0.00	0.00	-0.05
32.48	0.0003	-0.23	0.20	0.00	0.00	-0.04
32.49	0.0001	-0.18	0.16	0.00	0.00	-0.02
32.50	0.0000	-0.16	0.16	0.00	0.00	0.00
32.51	-0.0001	-0.16	0.18	0.00	0.00	0.02
32.52	-0.0003	-0.20	0.23	0.00	0.00	0.03
32.53	-0.0004	-0.24	0.29	0.00	0.00	0.05
32.54	-0.0005	-0.30	0.37	0.00	0.00	0.07
32.55	-0.0006	-0.38	0.47	0.00	0.00	0.09
32.56	-0.0008	-0.45	0.56	0.00	0.00	0.10
32.57	-0.0009	-0.53	0.65	0.00	0.00	0.12
32.58	-0.0010	-0.61	0.75	0.00	0.00	0.14
32.59	-0.0011	-0.68	0.84	0.00	0.00	0.16
32.60	-0.0013	-0.76	0.93	0.00	0.00	0.18
32.61	-0.0014	-0.83	1.03	0.00	0.00	0.19
32.62	-0.0015	-0.91	1.12	0.00	0.00	0.21
32.63	-0.0016	-0.99	1.22	0.00	0.00	0.23
32.64	-0.0018	-1.06	1.31	0.00	0.00	0.24
32.65	-0.0019	-1.14	1.40	0.00	0.00	0.26
32.66	-0.0020	-1.21	1.50	0.00	0.00	0.28
32.67	-0.0021	-1.29	1.59	0.00	0.00	0.30
32.68	-0.0023	-1.37	1.68	0.00	0.00	0.31
32.69	-0.0024	-1.44	1.78	0.00	0.00	0.33
32.70	-0.0025	-1.52	1.87	0.00	0.00	0.35
32.71	-0.0027	-1.59	1.96	0.00	0.00	0.37
32.72	-0.0028	-1.67	2.06	0.00	0.00	0.38
32.73	-0.0029	-1.75	2.15	0.00	0.00	0.40
32.74	-0.0030	-1.82	2.25	0.00	0.00	0.42
32.75	-0.0032	-1.90	2.34	0.00	0.00	0.44
32.76	-0.0033	-1.97	2.43	0.00	0.00	0.45
32.77	-0.0034	-2.05	2.53	0.00	0.00	0.47
32.78	-0.0035	-2.13	2.62	0.00	0.00	0.49
32.79	-0.0037	-2.20	2.71	0.00	0.00	0.50
32.80	-0.0038	-2.28	2.81	0.00	0.00	0.52

32.81	-0.0039	-2.34	2.89	0.00	0.00	0.55
32.82	-0.0041	-2.37	2.97	0.00	0.00	0.60
32.83	-0.0042	-2.37	3.04	0.00	0.00	0.66
32.84	-0.0044	-2.37	3.11	0.00	0.00	0.74
32.85	-0.0046	-2.34	3.17	0.00	0.00	0.82
32.86	-0.0048	-2.31	3.23	0.00	0.00	0.91
32.87	-0.0049	-2.27	3.28	0.00	0.00	1.01
32.88	-0.0051	-2.22	3.33	0.00	0.00	1.11
32.89	-0.0053	-2.16	3.38	0.00	0.00	1.21
32.90	-0.0055	-2.10	3.43	0.00	0.00	1.32
32.91	-0.0057	-2.04	3.48	0.00	0.00	1.43
32.92	-0.0059	-1.98	3.53	0.00	0.00	1.54
32.93	-0.0061	-1.91	3.57	0.00	0.00	1.65
32.94	-0.0063	-1.84	3.62	0.00	0.00	1.77
32.95	-0.0065	-1.77	3.66	0.00	0.00	1.88
32.96	-0.0067	-1.70	3.71	0.00	0.00	2.00
32.97	-0.0069	-1.63	3.75	0.00	-0.01	2.11
32.98	-0.0071	-1.56	3.80	0.00	-0.01	2.23
32.99	-0.0073	-1.49	3.84	0.00	-0.01	2.35
33.00	-0.0075	-1.41	3.88	0.00	-0.01	2.46
33.01	-0.0073	-1.48	3.87	0.00	-0.01	2.38
33.02	-0.0071	-1.56	3.79	0.00	-0.01	2.22
33.03	-0.0069	-1.63	3.75	0.00	-0.01	2.11
33.04	-0.0067	-1.70	3.71	0.00	0.00	2.00
33.05	-0.0065	-1.77	3.66	0.00	0.00	1.88
33.06	-0.0063	-1.84	3.62	0.00	0.00	1.77
33.07	-0.0061	-1.91	3.57	0.00	0.00	1.66
33.08	-0.0059	-1.98	3.53	0.00	0.00	1.54
33.09	-0.0057	-2.04	3.48	0.00	0.00	1.43
33.10	-0.0055	-2.10	3.43	0.00	0.00	1.32
33.11	-0.0053	-2.16	3.38	0.00	0.00	1.21
33.12	-0.0051	-2.22	3.33	0.00	0.00	1.11
33.13	-0.0049	-2.27	3.28	0.00	0.00	1.01
33.14	-0.0048	-2.31	3.23	0.00	0.00	0.91
33.15	-0.0046	-2.34	3.17	0.00	0.00	0.82
33.16	-0.0044	-2.37	3.11	0.00	0.00	0.74
33.17	-0.0042	-2.38	3.04	0.00	0.00	0.66
33.18	-0.0041	-2.37	2.97	0.00	0.00	0.60
33.19	-0.0039	-2.34	2.89	0.00	0.00	0.55
33.20	-0.0038	-2.27	2.80	0.00	0.00	0.52
33.21	-0.0037	-2.20	2.71	0.00	0.00	0.51
33.22	-0.0035	-2.13	2.62	0.00	0.00	0.49
33.23	-0.0034	-2.05	2.53	0.00	0.00	0.47
33.24	-0.0033	-1.97	2.43	0.00	0.00	0.45
33.25	-0.0032	-1.90	2.34	0.00	0.00	0.44
33.26	-0.0030	-1.82	2.25	0.00	0.00	0.42
33.27	-0.0029	-1.75	2.15	0.00	0.00	0.40
33.28	-0.0028	-1.67	2.06	0.00	0.00	0.38
33.29	-0.0027	-1.59	1.96	0.00	0.00	0.37
33.30	-0.0025	-1.52	1.87	0.00	0.00	0.35
33.31	-0.0024	-1.44	1.78	0.00	0.00	0.33
33.32	-0.0023	-1.37	1.68	0.00	0.00	0.31
33.33	-0.0021	-1.29	1.59	0.00	0.00	0.30
33.34	-0.0020	-1.21	1.50	0.00	0.00	0.28
33.35	-0.0019	-1.14	1.40	0.00	0.00	0.26
33.36	-0.0018	-1.06	1.31	0.00	0.00	0.24
33.37	-0.0016	-0.99	1.22	0.00	0.00	0.23

33.38	-0.0015	-0.91	1.12	0.00	0.00	0.21
33.39	-0.0014	-0.83	1.03	0.00	0.00	0.19
33.40	-0.0013	-0.76	0.93	0.00	0.00	0.18
33.41	-0.0011	-0.68	0.84	0.00	0.00	0.16
33.42	-0.0010	-0.61	0.75	0.00	0.00	0.14
33.43	-0.0009	-0.53	0.65	0.00	0.00	0.12
33.44	-0.0008	-0.45	0.56	0.00	0.00	0.10
33.45	-0.0006	-0.38	0.47	0.00	0.00	0.09
33.46	-0.0005	-0.30	0.37	0.00	0.00	0.07
33.47	-0.0004	-0.24	0.29	0.00	0.00	0.05
33.48	-0.0003	-0.20	0.23	0.00	0.00	0.03
33.49	-0.0001	-0.16	0.18	0.00	0.00	0.02
33.50	0.0000	-0.16	0.16	0.00	0.00	0.00
33.51	0.0001	-0.18	0.16	0.00	0.00	-0.02
33.52	0.0003	-0.23	0.20	0.00	0.00	-0.04
33.53	0.0004	-0.29	0.24	0.00	0.00	-0.05
33.54	0.0005	-0.37	0.30	0.00	0.00	-0.07
33.55	0.0006	-0.47	0.38	0.00	0.00	-0.09
33.56	0.0008	-0.56	0.45	0.00	0.00	-0.11
33.57	0.0009	-0.65	0.53	0.00	0.00	-0.13
33.58	0.0010	-0.75	0.61	0.00	0.00	-0.14
33.59	0.0011	-0.84	0.68	0.00	0.00	-0.16
33.60	0.0013	-0.93	0.76	0.00	0.00	-0.18
33.61	0.0014	-1.03	0.83	0.00	0.00	-0.20
33.62	0.0015	-1.12	0.91	0.00	0.00	-0.21
33.63	0.0016	-1.22	0.99	0.00	0.00	-0.23
33.64	0.0018	-1.31	1.06	0.00	0.00	-0.25
33.65	0.0019	-1.40	1.14	0.00	0.00	-0.27
33.66	0.0020	-1.50	1.21	0.00	0.00	-0.29
33.67	0.0021	-1.59	1.29	0.00	0.00	-0.30
33.68	0.0023	-1.68	1.37	0.00	0.00	-0.32
33.69	0.0024	-1.78	1.44	0.00	0.00	-0.34
33.70	0.0025	-1.87	1.52	0.00	0.00	-0.36
33.71	0.0027	-1.96	1.59	0.00	0.00	-0.37
33.72	0.0028	-2.06	1.67	0.00	0.00	-0.39
33.73	0.0029	-2.15	1.75	0.00	0.00	-0.41
33.74	0.0030	-2.25	1.82	0.00	0.00	-0.43
33.75	0.0032	-2.34	1.90	0.00	0.00	-0.45
33.76	0.0033	-2.43	1.97	0.00	0.00	-0.46
33.77	0.0034	-2.53	2.05	0.00	0.00	-0.48
33.78	0.0035	-2.62	2.13	0.00	0.00	-0.50
33.79	0.0037	-2.71	2.20	0.00	0.00	-0.52
33.80	0.0038	-2.81	2.28	0.00	0.00	-0.53
33.81	0.0039	-2.89	2.34	0.00	0.00	-0.56
33.82	0.0041	-2.97	2.37	0.00	0.00	-0.61
33.83	0.0042	-3.04	2.37	0.00	0.00	-0.68
33.84	0.0044	-3.11	2.37	0.00	0.00	-0.75
33.85	0.0046	-3.17	2.34	0.00	0.00	-0.83
33.86	0.0048	-3.23	2.31	0.00	0.00	-0.92
33.87	0.0049	-3.28	2.27	0.00	0.00	-1.02
33.88	0.0051	-3.33	2.22	0.00	0.00	-1.12
33.89	0.0053	-3.38	2.16	0.00	0.00	-1.23
33.90	0.0055	-3.43	2.10	0.00	0.00	-1.34
33.91	0.0057	-3.48	2.04	0.00	0.00	-1.44
33.92	0.0059	-3.53	1.98	0.00	0.00	-1.56
33.93	0.0061	-3.57	1.91	0.00	0.00	-1.67
33.94	0.0063	-3.62	1.84	0.00	0.00	-1.78

33.95	0.0065	-3.66	1.77	0.00	0.00	-1.90
33.96	0.0067	-3.71	1.70	0.00	0.00	-2.01
33.97	0.0069	-3.75	1.63	-0.01	0.00	-2.13
33.98	0.0071	-3.80	1.56	-0.01	0.00	-2.24
33.99	0.0073	-3.84	1.49	-0.01	0.00	-2.36
34.00	0.0075	-3.88	1.41	-0.01	0.00	-2.48
34.01	0.0073	-3.87	1.48	-0.01	0.00	-2.39
34.02	0.0071	-3.79	1.56	-0.01	0.00	-2.23
34.03	0.0069	-3.75	1.63	-0.01	0.00	-2.12
34.04	0.0067	-3.71	1.70	0.00	0.00	-2.01
34.05	0.0065	-3.66	1.77	0.00	0.00	-1.90
34.06	0.0063	-3.62	1.84	0.00	0.00	-1.78
34.07	0.0061	-3.57	1.91	0.00	0.00	-1.67
34.08	0.0059	-3.53	1.98	0.00	0.00	-1.55
34.09	0.0057	-3.48	2.04	0.00	0.00	-1.44
34.10	0.0055	-3.43	2.10	0.00	0.00	-1.34
34.11	0.0053	-3.38	2.16	0.00	0.00	-1.23
34.12	0.0051	-3.33	2.22	0.00	0.00	-1.12
34.13	0.0049	-3.28	2.27	0.00	0.00	-1.02
34.14	0.0048	-3.23	2.31	0.00	0.00	-0.92
34.15	0.0046	-3.17	2.34	0.00	0.00	-0.83
34.16	0.0044	-3.11	2.37	0.00	0.00	-0.75
34.17	0.0042	-3.04	2.38	0.00	0.00	-0.67
34.18	0.0041	-2.97	2.37	0.00	0.00	-0.61
34.19	0.0039	-2.89	2.34	0.00	0.00	-0.56
34.20	0.0038	-2.80	2.27	0.00	0.00	-0.54
34.21	0.0037	-2.71	2.20	0.00	0.00	-0.52
34.22	0.0035	-2.62	2.13	0.00	0.00	-0.50
34.23	0.0034	-2.53	2.05	0.00	0.00	-0.48
34.24	0.0033	-2.43	1.97	0.00	0.00	-0.46
34.25	0.0032	-2.34	1.90	0.00	0.00	-0.45
34.26	0.0030	-2.25	1.82	0.00	0.00	-0.43
34.27	0.0029	-2.15	1.75	0.00	0.00	-0.41
34.28	0.0028	-2.06	1.67	0.00	0.00	-0.39
34.29	0.0027	-1.96	1.59	0.00	0.00	-0.37
34.30	0.0025	-1.87	1.52	0.00	0.00	-0.36
34.31	0.0024	-1.78	1.44	0.00	0.00	-0.34
34.32	0.0023	-1.68	1.37	0.00	0.00	-0.32
34.33	0.0021	-1.59	1.29	0.00	0.00	-0.30
34.34	0.0020	-1.50	1.21	0.00	0.00	-0.29
34.35	0.0019	-1.40	1.14	0.00	0.00	-0.27
34.36	0.0018	-1.31	1.06	0.00	0.00	-0.25
34.37	0.0016	-1.22	0.99	0.00	0.00	-0.23
34.38	0.0015	-1.12	0.91	0.00	0.00	-0.21
34.39	0.0014	-1.03	0.83	0.00	0.00	-0.20
34.40	0.0013	-0.93	0.76	0.00	0.00	-0.18
34.41	0.0011	-0.84	0.68	0.00	0.00	-0.16
34.42	0.0010	-0.75	0.61	0.00	0.00	-0.14
34.43	0.0009	-0.65	0.53	0.00	0.00	-0.13
34.44	0.0008	-0.56	0.45	0.00	0.00	-0.11
34.45	0.0006	-0.47	0.38	0.00	0.00	-0.09
34.46	0.0005	-0.37	0.30	0.00	0.00	-0.07
34.47	0.0004	-0.29	0.24	0.00	0.00	-0.05
34.48	0.0003	-0.23	0.20	0.00	0.00	-0.04
34.49	0.0001	-0.18	0.16	0.00	0.00	-0.02
34.50	0.0000	-0.16	0.16	0.00	0.00	0.00
34.51	-0.0001	-0.16	0.18	0.00	0.00	0.02

34.52	-0.0003	-0.20	0.23	0.00	0.00	0.03
34.53	-0.0004	-0.24	0.29	0.00	0.00	0.05
34.54	-0.0005	-0.30	0.37	0.00	0.00	0.07
34.55	-0.0006	-0.38	0.47	0.00	0.00	0.09
34.56	-0.0008	-0.45	0.56	0.00	0.00	0.10
34.57	-0.0009	-0.53	0.65	0.00	0.00	0.12
34.58	-0.0010	-0.61	0.75	0.00	0.00	0.14
34.59	-0.0011	-0.68	0.84	0.00	0.00	0.16
34.60	-0.0013	-0.76	0.93	0.00	0.00	0.18
34.61	-0.0014	-0.83	1.03	0.00	0.00	0.19
34.62	-0.0015	-0.91	1.12	0.00	0.00	0.21
34.63	-0.0016	-0.99	1.22	0.00	0.00	0.23
34.64	-0.0018	-1.06	1.31	0.00	0.00	0.24
34.65	-0.0019	-1.14	1.40	0.00	0.00	0.26
34.66	-0.0020	-1.21	1.50	0.00	0.00	0.28
34.67	-0.0021	-1.29	1.59	0.00	0.00	0.30
34.68	-0.0023	-1.37	1.68	0.00	0.00	0.31
34.69	-0.0024	-1.44	1.78	0.00	0.00	0.33
34.70	-0.0025	-1.52	1.87	0.00	0.00	0.35
34.71	-0.0027	-1.59	1.96	0.00	0.00	0.37
34.72	-0.0028	-1.67	2.06	0.00	0.00	0.38
34.73	-0.0029	-1.75	2.15	0.00	0.00	0.40
34.74	-0.0030	-1.82	2.25	0.00	0.00	0.42
34.75	-0.0032	-1.90	2.34	0.00	0.00	0.44
34.76	-0.0033	-1.97	2.43	0.00	0.00	0.45
34.77	-0.0034	-2.05	2.53	0.00	0.00	0.47
34.78	-0.0035	-2.13	2.62	0.00	0.00	0.49
34.79	-0.0037	-2.20	2.71	0.00	0.00	0.50
34.80	-0.0038	-2.28	2.81	0.00	0.00	0.52
34.81	-0.0039	-2.34	2.89	0.00	0.00	0.55
34.82	-0.0041	-2.37	2.97	0.00	0.00	0.60
34.83	-0.0042	-2.37	3.04	0.00	0.00	0.66
34.84	-0.0044	-2.37	3.11	0.00	0.00	0.74
34.85	-0.0046	-2.34	3.17	0.00	0.00	0.82
34.86	-0.0048	-2.31	3.23	0.00	0.00	0.91
34.87	-0.0049	-2.27	3.28	0.00	0.00	1.01
34.88	-0.0051	-2.22	3.33	0.00	0.00	1.11
34.89	-0.0053	-2.16	3.38	0.00	0.00	1.21
34.90	-0.0055	-2.10	3.43	0.00	0.00	1.32
34.91	-0.0057	-2.04	3.48	0.00	0.00	1.43
34.92	-0.0059	-1.98	3.53	0.00	0.00	1.54
34.93	-0.0061	-1.91	3.57	0.00	0.00	1.65
34.94	-0.0063	-1.84	3.62	0.00	0.00	1.77
34.95	-0.0065	-1.77	3.66	0.00	0.00	1.88
34.96	-0.0067	-1.70	3.71	0.00	0.00	2.00
34.97	-0.0069	-1.63	3.75	0.00	-0.01	2.11
34.98	-0.0071	-1.56	3.80	0.00	-0.01	2.23
34.99	-0.0073	-1.49	3.84	0.00	-0.01	2.35
35.00	-0.0075	-1.41	3.88	0.00	-0.01	2.46
35.01	-0.0073	-1.48	3.87	0.00	-0.01	2.38
35.02	-0.0071	-1.56	3.79	0.00	-0.01	2.22
35.03	-0.0069	-1.63	3.75	0.00	-0.01	2.11
35.04	-0.0067	-1.70	3.71	0.00	0.00	2.00
35.05	-0.0065	-1.77	3.66	0.00	0.00	1.88
35.06	-0.0063	-1.84	3.62	0.00	0.00	1.77
35.07	-0.0061	-1.91	3.57	0.00	0.00	1.66
35.08	-0.0059	-1.98	3.53	0.00	0.00	1.54

35.09	-0.0057	-2.04	3.48	0.00	0.00	1.43
35.10	-0.0055	-2.10	3.43	0.00	0.00	1.32
35.11	-0.0053	-2.16	3.38	0.00	0.00	1.21
35.12	-0.0051	-2.22	3.33	0.00	0.00	1.11
35.13	-0.0049	-2.27	3.28	0.00	0.00	1.01
35.14	-0.0048	-2.31	3.23	0.00	0.00	0.91
35.15	-0.0046	-2.34	3.17	0.00	0.00	0.82
35.16	-0.0044	-2.37	3.11	0.00	0.00	0.74
35.17	-0.0042	-2.38	3.04	0.00	0.00	0.66
35.18	-0.0041	-2.37	2.97	0.00	0.00	0.60
35.19	-0.0039	-2.34	2.89	0.00	0.00	0.55
35.20	-0.0038	-2.27	2.80	0.00	0.00	0.52
35.21	-0.0037	-2.20	2.71	0.00	0.00	0.51
35.22	-0.0035	-2.13	2.62	0.00	0.00	0.49
35.23	-0.0034	-2.05	2.53	0.00	0.00	0.47
35.24	-0.0033	-1.97	2.43	0.00	0.00	0.45
35.25	-0.0032	-1.90	2.34	0.00	0.00	0.44
35.26	-0.0030	-1.82	2.25	0.00	0.00	0.42
35.27	-0.0029	-1.75	2.15	0.00	0.00	0.40
35.28	-0.0028	-1.67	2.06	0.00	0.00	0.38
35.29	-0.0027	-1.59	1.96	0.00	0.00	0.37
35.30	-0.0025	-1.52	1.87	0.00	0.00	0.35
35.31	-0.0024	-1.44	1.78	0.00	0.00	0.33
35.32	-0.0023	-1.37	1.68	0.00	0.00	0.31
35.33	-0.0021	-1.29	1.59	0.00	0.00	0.30
35.34	-0.0020	-1.21	1.50	0.00	0.00	0.28
35.35	-0.0019	-1.14	1.40	0.00	0.00	0.26
35.36	-0.0018	-1.06	1.31	0.00	0.00	0.24
35.37	-0.0016	-0.99	1.22	0.00	0.00	0.23
35.38	-0.0015	-0.91	1.12	0.00	0.00	0.21
35.39	-0.0014	-0.83	1.03	0.00	0.00	0.19
35.40	-0.0013	-0.76	0.93	0.00	0.00	0.18
35.41	-0.0011	-0.68	0.84	0.00	0.00	0.16
35.42	-0.0010	-0.61	0.75	0.00	0.00	0.14
35.43	-0.0009	-0.53	0.65	0.00	0.00	0.12
35.44	-0.0008	-0.45	0.56	0.00	0.00	0.10
35.45	-0.0006	-0.38	0.47	0.00	0.00	0.09
35.46	-0.0005	-0.30	0.37	0.00	0.00	0.07
35.47	-0.0004	-0.24	0.29	0.00	0.00	0.05
35.48	-0.0003	-0.20	0.23	0.00	0.00	0.03
35.49	-0.0001	-0.16	0.18	0.00	0.00	0.02
35.50	0.0000	-0.16	0.16	0.00	0.00	0.00
35.51	0.0001	-0.18	0.16	0.00	0.00	-0.02
35.52	0.0003	-0.23	0.20	0.00	0.00	-0.04
35.53	0.0004	-0.29	0.24	0.00	0.00	-0.05
35.54	0.0005	-0.37	0.30	0.00	0.00	-0.07
35.55	0.0006	-0.47	0.38	0.00	0.00	-0.09
35.56	0.0008	-0.56	0.45	0.00	0.00	-0.11
35.57	0.0009	-0.65	0.53	0.00	0.00	-0.13
35.58	0.0010	-0.75	0.61	0.00	0.00	-0.14
35.59	0.0011	-0.84	0.68	0.00	0.00	-0.16
35.60	0.0013	-0.93	0.76	0.00	0.00	-0.18
35.61	0.0014	-1.03	0.83	0.00	0.00	-0.20
35.62	0.0015	-1.12	0.91	0.00	0.00	-0.21
35.63	0.0016	-1.22	0.99	0.00	0.00	-0.23
35.64	0.0018	-1.31	1.06	0.00	0.00	-0.25
35.65	0.0019	-1.40	1.14	0.00	0.00	-0.27

35.66	0.0020	-1.50	1.21	0.00	0.00	-0.29
35.67	0.0021	-1.59	1.29	0.00	0.00	-0.30
35.68	0.0023	-1.68	1.37	0.00	0.00	-0.32
35.69	0.0024	-1.78	1.44	0.00	0.00	-0.34
35.70	0.0025	-1.87	1.52	0.00	0.00	-0.36
35.71	0.0027	-1.96	1.59	0.00	0.00	-0.37
35.72	0.0028	-2.06	1.67	0.00	0.00	-0.39
35.73	0.0029	-2.15	1.75	0.00	0.00	-0.41
35.74	0.0030	-2.25	1.82	0.00	0.00	-0.43
35.75	0.0032	-2.34	1.90	0.00	0.00	-0.45
35.76	0.0033	-2.43	1.97	0.00	0.00	-0.46
35.77	0.0034	-2.53	2.05	0.00	0.00	-0.48
35.78	0.0035	-2.62	2.13	0.00	0.00	-0.50
35.79	0.0037	-2.71	2.20	0.00	0.00	-0.52
35.80	0.0038	-2.81	2.28	0.00	0.00	-0.53
35.81	0.0039	-2.89	2.34	0.00	0.00	-0.56
35.82	0.0041	-2.97	2.37	0.00	0.00	-0.61
35.83	0.0042	-3.04	2.37	0.00	0.00	-0.68
35.84	0.0044	-3.11	2.37	0.00	0.00	-0.75
35.85	0.0046	-3.17	2.34	0.00	0.00	-0.83
35.86	0.0048	-3.23	2.31	0.00	0.00	-0.92
35.87	0.0049	-3.28	2.27	0.00	0.00	-1.02
35.88	0.0051	-3.33	2.22	0.00	0.00	-1.12
35.89	0.0053	-3.38	2.16	0.00	0.00	-1.23
35.90	0.0055	-3.43	2.10	0.00	0.00	-1.34
35.91	0.0057	-3.48	2.04	0.00	0.00	-1.44
35.92	0.0059	-3.53	1.98	0.00	0.00	-1.56
35.93	0.0061	-3.57	1.91	0.00	0.00	-1.67
35.94	0.0063	-3.62	1.84	0.00	0.00	-1.78
35.95	0.0065	-3.66	1.77	0.00	0.00	-1.90
35.96	0.0067	-3.71	1.70	0.00	0.00	-2.01
35.97	0.0069	-3.75	1.63	-0.01	0.00	-2.13
35.98	0.0071	-3.80	1.56	-0.01	0.00	-2.24
35.99	0.0073	-3.84	1.49	-0.01	0.00	-2.36
36.00	0.0075	-3.88	1.41	-0.01	0.00	-2.48
36.01	0.0073	-3.86	1.49	-0.01	0.00	-2.38
36.02	0.0070	-3.78	1.58	-0.01	0.00	-2.20
36.03	0.0068	-3.73	1.66	-0.01	0.00	-2.08
36.04	0.0066	-3.69	1.74	0.00	0.00	-1.96
36.05	0.0064	-3.63	1.81	0.00	0.00	-1.82
36.06	0.0061	-3.58	1.89	0.00	0.00	-1.70
36.07	0.0059	-3.53	1.97	0.00	0.00	-1.57
36.08	0.0057	-3.48	2.04	0.00	0.00	-1.44
36.09	0.0055	-3.42	2.11	0.00	0.00	-1.32
36.10	0.0053	-3.37	2.17	0.00	0.00	-1.20
36.11	0.0051	-3.31	2.24	0.00	0.00	-1.08
36.12	0.0049	-3.25	2.29	0.00	0.00	-0.97
36.13	0.0046	-3.19	2.33	0.00	0.00	-0.87
36.14	0.0044	-3.13	2.36	0.00	0.00	-0.77
36.15	0.0043	-3.05	2.38	0.00	0.00	-0.68
36.16	0.0041	-2.97	2.37	0.00	0.00	-0.61
36.17	0.0039	-2.88	2.33	0.00	0.00	-0.56
36.18	0.0038	-2.78	2.26	0.00	0.00	-0.53
36.19	0.0036	-2.68	2.17	0.00	0.00	-0.51
36.20	0.0035	-2.58	2.09	0.00	0.00	-0.49
36.21	0.0033	-2.47	2.00	0.00	0.00	-0.47
36.22	0.0032	-2.37	1.92	0.00	0.00	-0.45

36.23	0.0031	-2.26	1.83	0.00	0.00	-0.43
36.24	0.0029	-2.15	1.75	0.00	0.00	-0.41
36.25	0.0028	-2.05	1.66	0.00	0.00	-0.39
36.26	0.0026	-1.94	1.58	0.00	0.00	-0.37
36.27	0.0025	-1.84	1.49	0.00	0.00	-0.35
36.28	0.0023	-1.73	1.41	0.00	0.00	-0.33
36.29	0.0022	-1.63	1.32	0.00	0.00	-0.31
36.30	0.0021	-1.52	1.24	0.00	0.00	-0.29
36.31	0.0019	-1.42	1.15	0.00	0.00	-0.27
36.32	0.0018	-1.31	1.07	0.00	0.00	-0.25
36.33	0.0016	-1.21	0.98	0.00	0.00	-0.23
36.34	0.0015	-1.10	0.89	0.00	0.00	-0.21
36.35	0.0013	-1.00	0.81	0.00	0.00	-0.19
36.36	0.0012	-0.89	0.72	0.00	0.00	-0.17
36.37	0.0011	-0.79	0.64	0.00	0.00	-0.15
36.38	0.0009	-0.68	0.55	0.00	0.00	-0.13
36.39	0.0008	-0.58	0.47	0.00	0.00	-0.11
36.40	0.0006	-0.47	0.38	0.00	0.00	-0.09
36.41	0.0005	-0.37	0.30	0.00	0.00	-0.07
36.42	0.0004	-0.28	0.23	0.00	0.00	-0.05
36.43	0.0002	-0.22	0.19	0.00	0.00	-0.03
36.44	0.0001	-0.16	0.15	0.00	0.00	-0.01
36.45	-0.0001	-0.15	0.16	0.00	0.00	0.01
36.46	-0.0002	-0.19	0.22	0.00	0.00	0.03
36.47	-0.0004	-0.23	0.28	0.00	0.00	0.05
36.48	-0.0005	-0.30	0.37	0.00	0.00	0.07
36.49	-0.0006	-0.38	0.47	0.00	0.00	0.09
36.50	-0.0008	-0.47	0.58	0.00	0.00	0.11
36.51	-0.0009	-0.55	0.68	0.00	0.00	0.13
36.52	-0.0011	-0.64	0.79	0.00	0.00	0.15
36.53	-0.0012	-0.72	0.89	0.00	0.00	0.17
36.54	-0.0013	-0.81	1.00	0.00	0.00	0.19
36.55	-0.0015	-0.89	1.10	0.00	0.00	0.21
36.56	-0.0016	-0.98	1.21	0.00	0.00	0.23
36.57	-0.0018	-1.07	1.31	0.00	0.00	0.25
36.58	-0.0019	-1.15	1.42	0.00	0.00	0.27
36.59	-0.0021	-1.24	1.52	0.00	0.00	0.28
36.60	-0.0022	-1.32	1.63	0.00	0.00	0.30
36.61	-0.0023	-1.41	1.73	0.00	0.00	0.32
36.62	-0.0025	-1.49	1.84	0.00	0.00	0.34
36.63	-0.0026	-1.58	1.94	0.00	0.00	0.36
36.64	-0.0028	-1.66	2.05	0.00	0.00	0.38
36.65	-0.0029	-1.75	2.16	0.00	0.00	0.40
36.66	-0.0031	-1.83	2.26	0.00	0.00	0.42
36.67	-0.0032	-1.92	2.37	0.00	0.00	0.44
36.68	-0.0033	-2.00	2.47	0.00	0.00	0.46
36.69	-0.0035	-2.09	2.58	0.00	0.00	0.48
36.70	-0.0036	-2.18	2.68	0.00	0.00	0.50
36.71	-0.0038	-2.26	2.79	0.00	0.00	0.52
36.72	-0.0039	-2.33	2.89	0.00	0.00	0.55
36.73	-0.0041	-2.37	2.97	0.00	0.00	0.60
36.74	-0.0043	-2.37	3.05	0.00	0.00	0.67
36.75	-0.0044	-2.36	3.13	0.00	0.00	0.76
36.76	-0.0046	-2.33	3.19	0.00	0.00	0.86
36.77	-0.0049	-2.29	3.25	0.00	0.00	0.96
36.78	-0.0051	-2.23	3.31	0.00	0.00	1.07
36.79	-0.0053	-2.17	3.37	0.00	0.00	1.19

36.80	-0.0055	-2.11	3.43	0.00	0.00	1.31
36.81	-0.0057	-2.04	3.48	0.00	0.00	1.43
36.82	-0.0059	-1.97	3.53	0.00	0.00	1.56
36.83	-0.0061	-1.89	3.58	0.00	0.00	1.69
36.84	-0.0064	-1.81	3.63	0.00	0.00	1.81
36.85	-0.0066	-1.74	3.68	0.00	0.00	1.94
36.86	-0.0068	-1.66	3.74	0.00	-0.01	2.07
36.87	-0.0070	-1.58	3.79	0.00	-0.01	2.20
36.88	-0.0073	-1.50	3.83	0.00	-0.01	2.33
36.89	-0.0075	-1.41	3.88	0.00	-0.01	2.46
36.90	-0.0077	-1.33	3.93	0.00	-0.01	2.59
36.91	-0.0079	-1.25	3.98	0.00	-0.01	2.73
36.92	-0.0082	-1.16	4.03	0.00	-0.01	2.86
36.93	-0.0084	-1.08	4.08	0.00	-0.01	2.99
36.94	-0.0086	-1.00	4.13	0.00	-0.01	3.12
36.95	-0.0088	-0.91	4.18	0.00	-0.01	3.26
36.96	-0.0090	-0.83	4.23	0.00	-0.01	3.39
36.97	-0.0093	-0.74	4.27	0.00	-0.01	3.52
36.98	-0.0095	-0.65	4.32	0.00	-0.01	3.66
36.99	-0.0097	-0.57	4.37	0.00	-0.01	3.79
37.00	-0.0100	-0.48	4.42	0.00	-0.01	3.93
37.01	-0.0098	-0.57	4.40	0.00	-0.01	3.82
37.02	-0.0094	-0.68	4.30	0.00	-0.01	3.62
37.03	-0.0092	-0.77	4.25	0.00	-0.01	3.48
37.04	-0.0090	-0.87	4.21	0.00	-0.01	3.34
37.05	-0.0087	-0.96	4.15	0.00	-0.01	3.18
37.06	-0.0084	-1.05	4.10	0.00	-0.01	3.03
37.07	-0.0082	-1.15	4.04	0.00	-0.01	2.89
37.08	-0.0080	-1.24	3.99	0.00	-0.01	2.74
37.09	-0.0077	-1.33	3.93	0.00	-0.01	2.60
37.10	-0.0075	-1.42	3.88	0.00	-0.01	2.45
37.11	-0.0072	-1.51	3.82	0.00	-0.01	2.30
37.12	-0.0070	-1.61	3.77	0.00	-0.01	2.16
37.13	-0.0067	-1.69	3.71	0.00	-0.01	2.01
37.14	-0.0065	-1.78	3.66	0.00	0.00	1.87
37.15	-0.0062	-1.86	3.60	0.00	0.00	1.73
37.16	-0.0060	-1.95	3.54	0.00	0.00	1.59
37.17	-0.0057	-2.03	3.49	0.00	0.00	1.45
37.18	-0.0055	-2.11	3.43	0.00	0.00	1.31
37.19	-0.0053	-2.18	3.37	0.00	0.00	1.18
37.20	-0.0050	-2.25	3.30	0.00	0.00	1.05
37.21	-0.0048	-2.30	3.24	0.00	0.00	0.93
37.22	-0.0046	-2.34	3.16	0.00	0.00	0.81
37.23	-0.0043	-2.37	3.09	0.00	0.00	0.71
37.24	-0.0041	-2.37	3.00	0.00	0.00	0.63
37.25	-0.0039	-2.34	2.91	0.00	0.00	0.56
37.26	-0.0038	-2.27	2.80	0.00	0.00	0.53
37.27	-0.0036	-2.18	2.68	0.00	0.00	0.50
37.28	-0.0035	-2.08	2.57	0.00	0.00	0.48
37.29	-0.0033	-1.99	2.45	0.00	0.00	0.46
37.30	-0.0032	-1.89	2.33	0.00	0.00	0.43
37.31	-0.0030	-1.80	2.22	0.00	0.00	0.41
37.32	-0.0028	-1.70	2.10	0.00	0.00	0.39
37.33	-0.0027	-1.61	1.98	0.00	0.00	0.37
37.34	-0.0025	-1.51	1.87	0.00	0.00	0.35
37.35	-0.0024	-1.42	1.75	0.00	0.00	0.33
37.36	-0.0022	-1.32	1.63	0.00	0.00	0.31

37.37	-0.0020	-1.23	1.52	0.00	0.00	0.28
37.38	-0.0019	-1.14	1.40	0.00	0.00	0.26
37.39	-0.0017	-1.04	1.28	0.00	0.00	0.24
37.40	-0.0016	-0.95	1.17	0.00	0.00	0.22
37.41	-0.0014	-0.85	1.05	0.00	0.00	0.20
37.42	-0.0013	-0.76	0.93	0.00	0.00	0.17
37.43	-0.0011	-0.66	0.82	0.00	0.00	0.15
37.44	-0.0009	-0.57	0.70	0.00	0.00	0.13
37.45	-0.0008	-0.47	0.58	0.00	0.00	0.11
37.46	-0.0006	-0.38	0.47	0.00	0.00	0.09
37.47	-0.0005	-0.28	0.35	0.00	0.00	0.07
37.48	-0.0003	-0.22	0.26	0.00	0.00	0.04
37.49	-0.0002	-0.17	0.19	0.00	0.00	0.02
37.50	0.0000	-0.15	0.16	0.00	0.00	0.00
37.51	0.0002	-0.19	0.17	0.00	0.00	-0.02
37.52	0.0003	-0.26	0.22	0.00	0.00	-0.05
37.53	0.0005	-0.35	0.28	0.00	0.00	-0.07
37.54	0.0006	-0.47	0.38	0.00	0.00	-0.09
37.55	0.0008	-0.58	0.47	0.00	0.00	-0.11
37.56	0.0009	-0.70	0.57	0.00	0.00	-0.14
37.57	0.0011	-0.82	0.66	0.00	0.00	-0.16
37.58	0.0013	-0.93	0.76	0.00	0.00	-0.18
37.59	0.0014	-1.05	0.85	0.00	0.00	-0.20
37.60	0.0016	-1.17	0.95	0.00	0.00	-0.22
37.61	0.0017	-1.28	1.04	0.00	0.00	-0.25
37.62	0.0019	-1.40	1.14	0.00	0.00	-0.27
37.63	0.0020	-1.52	1.23	0.00	0.00	-0.29
37.64	0.0022	-1.63	1.32	0.00	0.00	-0.31
37.65	0.0024	-1.75	1.42	0.00	0.00	-0.33
37.66	0.0025	-1.87	1.51	0.00	0.00	-0.36
37.67	0.0027	-1.98	1.61	0.00	0.00	-0.38
37.68	0.0028	-2.10	1.70	0.00	0.00	-0.40
37.69	0.0030	-2.22	1.80	0.00	0.00	-0.42
37.70	0.0032	-2.33	1.89	0.00	0.00	-0.45
37.71	0.0033	-2.45	1.99	0.00	0.00	-0.47
37.72	0.0035	-2.57	2.08	0.00	0.00	-0.49
37.73	0.0036	-2.68	2.18	0.00	0.00	-0.51
37.74	0.0038	-2.80	2.27	0.00	0.00	-0.53
37.75	0.0040	-2.91	2.34	0.00	0.00	-0.57
37.76	0.0041	-3.00	2.37	0.00	0.00	-0.64
37.77	0.0043	-3.09	2.37	0.00	0.00	-0.73
37.78	0.0046	-3.16	2.35	0.00	0.00	-0.83
37.79	0.0048	-3.24	2.30	0.00	0.00	-0.94
37.80	0.0050	-3.30	2.25	0.00	0.00	-1.06
37.81	0.0053	-3.36	2.18	0.00	0.00	-1.19
37.82	0.0055	-3.43	2.11	0.00	0.00	-1.33
37.83	0.0057	-3.49	2.03	0.00	0.00	-1.46
37.84	0.0060	-3.54	1.95	0.00	0.00	-1.60
37.85	0.0062	-3.60	1.86	0.00	0.00	-1.74
37.86	0.0065	-3.66	1.78	0.00	0.00	-1.89
37.87	0.0067	-3.71	1.69	-0.01	0.00	-2.03
37.88	0.0070	-3.77	1.61	-0.01	0.00	-2.17
37.89	0.0072	-3.82	1.51	-0.01	0.00	-2.32
37.90	0.0075	-3.88	1.42	-0.01	0.00	-2.46
37.91	0.0077	-3.93	1.33	-0.01	0.00	-2.61
37.92	0.0080	-3.99	1.24	-0.01	0.00	-2.76
37.93	0.0082	-4.04	1.15	-0.01	0.00	-2.90

37.94	0.0085	-4.10	1.05	-0.01	0.00	-3.05
37.95	0.0087	-4.15	0.96	-0.01	0.00	-3.20
37.96	0.0089	-4.20	0.87	-0.01	0.00	-3.35
37.97	0.0092	-4.26	0.77	-0.01	0.00	-3.50
37.98	0.0095	-4.31	0.68	-0.01	0.00	-3.64
37.99	0.0097	-4.36	0.58	-0.01	0.00	-3.79
38.00	0.0100	-4.42	0.48	-0.01	0.00	-3.94
38.01	0.0098	-4.40	0.57	-0.01	0.00	-3.84
38.02	0.0094	-4.30	0.68	-0.01	0.00	-3.63
38.03	0.0092	-4.25	0.77	-0.01	0.00	-3.49
38.04	0.0090	-4.21	0.87	-0.01	0.00	-3.35
38.05	0.0087	-4.15	0.96	-0.01	0.00	-3.20
38.06	0.0084	-4.10	1.05	-0.01	0.00	-3.05
38.07	0.0082	-4.04	1.15	-0.01	0.00	-2.90
38.08	0.0080	-3.99	1.24	-0.01	0.00	-2.76
38.09	0.0077	-3.93	1.33	-0.01	0.00	-2.61
38.10	0.0075	-3.88	1.42	-0.01	0.00	-2.46
38.11	0.0072	-3.82	1.51	-0.01	0.00	-2.32
38.12	0.0070	-3.77	1.61	-0.01	0.00	-2.17
38.13	0.0067	-3.71	1.69	-0.01	0.00	-2.03
38.14	0.0065	-3.66	1.78	0.00	0.00	-1.89
38.15	0.0062	-3.60	1.86	0.00	0.00	-1.74
38.16	0.0060	-3.54	1.95	0.00	0.00	-1.60
38.17	0.0057	-3.49	2.03	0.00	0.00	-1.46
38.18	0.0055	-3.43	2.11	0.00	0.00	-1.33
38.19	0.0053	-3.37	2.18	0.00	0.00	-1.19
38.20	0.0050	-3.30	2.25	0.00	0.00	-1.06
38.21	0.0048	-3.24	2.30	0.00	0.00	-0.94
38.22	0.0046	-3.16	2.34	0.00	0.00	-0.83
38.23	0.0043	-3.09	2.37	0.00	0.00	-0.73
38.24	0.0041	-3.00	2.37	0.00	0.00	-0.64
38.25	0.0039	-2.91	2.34	0.00	0.00	-0.57
38.26	0.0038	-2.80	2.27	0.00	0.00	-0.54
38.27	0.0036	-2.68	2.18	0.00	0.00	-0.51
38.28	0.0035	-2.57	2.08	0.00	0.00	-0.49
38.29	0.0033	-2.45	1.99	0.00	0.00	-0.47
38.30	0.0032	-2.33	1.89	0.00	0.00	-0.44
38.31	0.0030	-2.22	1.80	0.00	0.00	-0.42
38.32	0.0028	-2.10	1.70	0.00	0.00	-0.40
38.33	0.0027	-1.98	1.61	0.00	0.00	-0.38
38.34	0.0025	-1.87	1.51	0.00	0.00	-0.36
38.35	0.0024	-1.75	1.42	0.00	0.00	-0.33
38.36	0.0022	-1.63	1.32	0.00	0.00	-0.31
38.37	0.0020	-1.52	1.23	0.00	0.00	-0.29
38.38	0.0019	-1.40	1.14	0.00	0.00	-0.27
38.39	0.0017	-1.28	1.04	0.00	0.00	-0.25
38.40	0.0016	-1.17	0.95	0.00	0.00	-0.22
38.41	0.0014	-1.05	0.85	0.00	0.00	-0.20
38.42	0.0013	-0.93	0.76	0.00	0.00	-0.18
38.43	0.0011	-0.82	0.66	0.00	0.00	-0.16
38.44	0.0009	-0.70	0.57	0.00	0.00	-0.14
38.45	0.0008	-0.58	0.47	0.00	0.00	-0.11
38.46	0.0006	-0.47	0.38	0.00	0.00	-0.09
38.47	0.0005	-0.35	0.28	0.00	0.00	-0.07
38.48	0.0003	-0.26	0.22	0.00	0.00	-0.05
38.49	0.0002	-0.19	0.17	0.00	0.00	-0.02
38.50	0.0000	-0.16	0.15	0.00	0.00	0.00

38.51	-0.0002	-0.17	0.19	0.00	0.00	0.02
38.52	-0.0003	-0.22	0.26	0.00	0.00	0.04
38.53	-0.0005	-0.28	0.35	0.00	0.00	0.07
38.54	-0.0006	-0.38	0.47	0.00	0.00	0.09
38.55	-0.0008	-0.47	0.58	0.00	0.00	0.11
38.56	-0.0009	-0.57	0.70	0.00	0.00	0.13
38.57	-0.0011	-0.66	0.82	0.00	0.00	0.15
38.58	-0.0013	-0.76	0.93	0.00	0.00	0.17
38.59	-0.0014	-0.85	1.05	0.00	0.00	0.20
38.60	-0.0016	-0.95	1.17	0.00	0.00	0.22
38.61	-0.0017	-1.04	1.28	0.00	0.00	0.24
38.62	-0.0019	-1.14	1.40	0.00	0.00	0.26
38.63	-0.0020	-1.23	1.52	0.00	0.00	0.28
38.64	-0.0022	-1.32	1.63	0.00	0.00	0.31
38.65	-0.0024	-1.42	1.75	0.00	0.00	0.33
38.66	-0.0025	-1.51	1.87	0.00	0.00	0.35
38.67	-0.0027	-1.61	1.98	0.00	0.00	0.37
38.68	-0.0028	-1.70	2.10	0.00	0.00	0.39
38.69	-0.0030	-1.80	2.22	0.00	0.00	0.41
38.70	-0.0032	-1.89	2.33	0.00	0.00	0.44
38.71	-0.0033	-1.99	2.45	0.00	0.00	0.46
38.72	-0.0035	-2.08	2.57	0.00	0.00	0.48
38.73	-0.0036	-2.18	2.68	0.00	0.00	0.50
38.74	-0.0038	-2.27	2.80	0.00	0.00	0.52
38.75	-0.0040	-2.34	2.91	0.00	0.00	0.56
38.76	-0.0041	-2.37	3.00	0.00	0.00	0.63
38.77	-0.0043	-2.37	3.09	0.00	0.00	0.71
38.78	-0.0046	-2.35	3.16	0.00	0.00	0.81
38.79	-0.0048	-2.30	3.24	0.00	0.00	0.93
38.80	-0.0050	-2.25	3.30	0.00	0.00	1.05
38.81	-0.0053	-2.18	3.36	0.00	0.00	1.18
38.82	-0.0055	-2.11	3.43	0.00	0.00	1.31
38.83	-0.0057	-2.03	3.49	0.00	0.00	1.45
38.84	-0.0060	-1.95	3.54	0.00	0.00	1.59
38.85	-0.0062	-1.86	3.60	0.00	0.00	1.73
38.86	-0.0065	-1.78	3.66	0.00	0.00	1.87
38.87	-0.0067	-1.69	3.71	0.00	-0.01	2.01
38.88	-0.0070	-1.61	3.77	0.00	-0.01	2.16
38.89	-0.0072	-1.51	3.82	0.00	-0.01	2.30
38.90	-0.0075	-1.42	3.88	0.00	-0.01	2.45
38.91	-0.0077	-1.33	3.93	0.00	-0.01	2.60
38.92	-0.0080	-1.24	3.99	0.00	-0.01	2.74
38.93	-0.0082	-1.15	4.04	0.00	-0.01	2.89
38.94	-0.0085	-1.05	4.10	0.00	-0.01	3.04
38.95	-0.0087	-0.96	4.15	0.00	-0.01	3.18
38.96	-0.0089	-0.87	4.20	0.00	-0.01	3.33
38.97	-0.0092	-0.77	4.26	0.00	-0.01	3.48
38.98	-0.0095	-0.68	4.31	0.00	-0.01	3.63
38.99	-0.0097	-0.58	4.36	0.00	-0.01	3.78
39.00	-0.0100	-0.48	4.42	0.00	-0.01	3.93
39.01	-0.0098	-0.57	4.40	0.00	-0.01	3.82
39.02	-0.0094	-0.68	4.30	0.00	-0.01	3.62
39.03	-0.0092	-0.77	4.25	0.00	-0.01	3.48
39.04	-0.0090	-0.87	4.21	0.00	-0.01	3.34
39.05	-0.0087	-0.96	4.15	0.00	-0.01	3.18
39.06	-0.0084	-1.05	4.10	0.00	-0.01	3.03
39.07	-0.0082	-1.15	4.04	0.00	-0.01	2.89

39.08	-0.0080	-1.24	3.99	0.00	-0.01	2.74
39.09	-0.0077	-1.33	3.93	0.00	-0.01	2.60
39.10	-0.0075	-1.42	3.88	0.00	-0.01	2.45
39.11	-0.0072	-1.51	3.82	0.00	-0.01	2.30
39.12	-0.0070	-1.61	3.77	0.00	-0.01	2.16
39.13	-0.0067	-1.69	3.71	0.00	-0.01	2.01
39.14	-0.0065	-1.78	3.66	0.00	0.00	1.87
39.15	-0.0062	-1.86	3.60	0.00	0.00	1.73
39.16	-0.0060	-1.95	3.54	0.00	0.00	1.59
39.17	-0.0057	-2.03	3.49	0.00	0.00	1.45
39.18	-0.0055	-2.11	3.43	0.00	0.00	1.31
39.19	-0.0053	-2.18	3.37	0.00	0.00	1.18
39.20	-0.0050	-2.25	3.30	0.00	0.00	1.05
39.21	-0.0048	-2.30	3.24	0.00	0.00	0.93
39.22	-0.0046	-2.34	3.16	0.00	0.00	0.81
39.23	-0.0043	-2.37	3.09	0.00	0.00	0.71
39.24	-0.0041	-2.37	3.00	0.00	0.00	0.63
39.25	-0.0039	-2.34	2.91	0.00	0.00	0.56
39.26	-0.0038	-2.27	2.80	0.00	0.00	0.53
39.27	-0.0036	-2.18	2.68	0.00	0.00	0.50
39.28	-0.0035	-2.08	2.57	0.00	0.00	0.48
39.29	-0.0033	-1.99	2.45	0.00	0.00	0.46
39.30	-0.0032	-1.89	2.33	0.00	0.00	0.43
39.31	-0.0030	-1.80	2.22	0.00	0.00	0.41
39.32	-0.0028	-1.70	2.10	0.00	0.00	0.39
39.33	-0.0027	-1.61	1.98	0.00	0.00	0.37
39.34	-0.0025	-1.51	1.87	0.00	0.00	0.35
39.35	-0.0024	-1.42	1.75	0.00	0.00	0.33
39.36	-0.0022	-1.32	1.63	0.00	0.00	0.31
39.37	-0.0020	-1.23	1.52	0.00	0.00	0.28
39.38	-0.0019	-1.14	1.40	0.00	0.00	0.26
39.39	-0.0017	-1.04	1.28	0.00	0.00	0.24
39.40	-0.0016	-0.95	1.17	0.00	0.00	0.22
39.41	-0.0014	-0.85	1.05	0.00	0.00	0.20
39.42	-0.0013	-0.76	0.93	0.00	0.00	0.17
39.43	-0.0011	-0.66	0.82	0.00	0.00	0.15
39.44	-0.0009	-0.57	0.70	0.00	0.00	0.13
39.45	-0.0008	-0.47	0.58	0.00	0.00	0.11
39.46	-0.0006	-0.38	0.47	0.00	0.00	0.09
39.47	-0.0005	-0.28	0.35	0.00	0.00	0.07
39.48	-0.0003	-0.22	0.26	0.00	0.00	0.04
39.49	-0.0002	-0.17	0.19	0.00	0.00	0.02
39.50	0.0000	-0.15	0.16	0.00	0.00	0.00
39.51	0.0002	-0.19	0.17	0.00	0.00	-0.02
39.52	0.0003	-0.26	0.22	0.00	0.00	-0.05
39.53	0.0005	-0.35	0.28	0.00	0.00	-0.07
39.54	0.0006	-0.47	0.38	0.00	0.00	-0.09
39.55	0.0008	-0.58	0.47	0.00	0.00	-0.11
39.56	0.0009	-0.70	0.57	0.00	0.00	-0.14
39.57	0.0011	-0.82	0.66	0.00	0.00	-0.16
39.58	0.0013	-0.93	0.76	0.00	0.00	-0.18
39.59	0.0014	-1.05	0.85	0.00	0.00	-0.20
39.60	0.0016	-1.17	0.95	0.00	0.00	-0.22
39.61	0.0017	-1.28	1.04	0.00	0.00	-0.25
39.62	0.0019	-1.40	1.14	0.00	0.00	-0.27
39.63	0.0020	-1.52	1.23	0.00	0.00	-0.29
39.64	0.0022	-1.63	1.32	0.00	0.00	-0.31

39.65	0.0024	-1.75	1.42	0.00	0.00	-0.33
39.66	0.0025	-1.87	1.51	0.00	0.00	-0.36
39.67	0.0027	-1.98	1.61	0.00	0.00	-0.38
39.68	0.0028	-2.10	1.70	0.00	0.00	-0.40
39.69	0.0030	-2.22	1.80	0.00	0.00	-0.42
39.70	0.0032	-2.33	1.89	0.00	0.00	-0.45
39.71	0.0033	-2.45	1.99	0.00	0.00	-0.47
39.72	0.0035	-2.57	2.08	0.00	0.00	-0.49
39.73	0.0036	-2.68	2.18	0.00	0.00	-0.51
39.74	0.0038	-2.80	2.27	0.00	0.00	-0.53
39.75	0.0040	-2.91	2.34	0.00	0.00	-0.57
39.76	0.0041	-3.00	2.37	0.00	0.00	-0.64
39.77	0.0043	-3.09	2.37	0.00	0.00	-0.73
39.78	0.0046	-3.16	2.35	0.00	0.00	-0.83
39.79	0.0048	-3.24	2.30	0.00	0.00	-0.94
39.80	0.0050	-3.30	2.25	0.00	0.00	-1.06
39.81	0.0053	-3.36	2.18	0.00	0.00	-1.19
39.82	0.0055	-3.43	2.11	0.00	0.00	-1.33
39.83	0.0057	-3.49	2.03	0.00	0.00	-1.46
39.84	0.0060	-3.54	1.95	0.00	0.00	-1.60
39.85	0.0062	-3.60	1.86	0.00	0.00	-1.74
39.86	0.0065	-3.66	1.78	0.00	0.00	-1.89
39.87	0.0067	-3.71	1.69	-0.01	0.00	-2.03
39.88	0.0070	-3.77	1.61	-0.01	0.00	-2.17
39.89	0.0072	-3.82	1.51	-0.01	0.00	-2.32
39.90	0.0075	-3.88	1.42	-0.01	0.00	-2.46
39.91	0.0077	-3.93	1.33	-0.01	0.00	-2.61
39.92	0.0080	-3.99	1.24	-0.01	0.00	-2.76
39.93	0.0082	-4.04	1.15	-0.01	0.00	-2.90
39.94	0.0085	-4.10	1.05	-0.01	0.00	-3.05
39.95	0.0087	-4.15	0.96	-0.01	0.00	-3.20
39.96	0.0089	-4.20	0.87	-0.01	0.00	-3.35
39.97	0.0092	-4.26	0.77	-0.01	0.00	-3.50
39.98	0.0095	-4.31	0.68	-0.01	0.00	-3.64
39.99	0.0097	-4.36	0.58	-0.01	0.00	-3.79
40.00	0.0100	-4.42	0.48	-0.01	0.00	-3.94
40.01	0.0098	-4.40	0.57	-0.01	0.00	-3.84
40.02	0.0094	-4.30	0.68	-0.01	0.00	-3.63
40.03	0.0092	-4.25	0.77	-0.01	0.00	-3.49
40.04	0.0090	-4.21	0.87	-0.01	0.00	-3.35
40.05	0.0087	-4.15	0.96	-0.01	0.00	-3.20
40.06	0.0084	-4.10	1.05	-0.01	0.00	-3.05
40.07	0.0082	-4.04	1.15	-0.01	0.00	-2.90
40.08	0.0080	-3.99	1.24	-0.01	0.00	-2.76
40.09	0.0077	-3.93	1.33	-0.01	0.00	-2.61
40.10	0.0075	-3.88	1.42	-0.01	0.00	-2.46
40.11	0.0072	-3.82	1.51	-0.01	0.00	-2.32
40.12	0.0070	-3.77	1.61	-0.01	0.00	-2.17
40.13	0.0067	-3.71	1.69	-0.01	0.00	-2.03
40.14	0.0065	-3.66	1.78	0.00	0.00	-1.89
40.15	0.0062	-3.60	1.86	0.00	0.00	-1.74
40.16	0.0060	-3.54	1.95	0.00	0.00	-1.60
40.17	0.0057	-3.49	2.03	0.00	0.00	-1.46
40.18	0.0055	-3.43	2.11	0.00	0.00	-1.33
40.19	0.0053	-3.37	2.18	0.00	0.00	-1.19
40.20	0.0050	-3.30	2.25	0.00	0.00	-1.06
40.21	0.0048	-3.24	2.30	0.00	0.00	-0.94

40.22	0.0046	-3.16	2.34	0.00	0.00	-0.83
40.23	0.0043	-3.09	2.37	0.00	0.00	-0.73
40.24	0.0041	-3.00	2.37	0.00	0.00	-0.64
40.25	0.0039	-2.91	2.34	0.00	0.00	-0.57
40.26	0.0038	-2.80	2.27	0.00	0.00	-0.54
40.27	0.0036	-2.68	2.18	0.00	0.00	-0.51
40.28	0.0035	-2.57	2.08	0.00	0.00	-0.49
40.29	0.0033	-2.45	1.99	0.00	0.00	-0.47
40.30	0.0032	-2.33	1.89	0.00	0.00	-0.44
40.31	0.0030	-2.22	1.80	0.00	0.00	-0.42
40.32	0.0028	-2.10	1.70	0.00	0.00	-0.40
40.33	0.0027	-1.98	1.61	0.00	0.00	-0.38
40.34	0.0025	-1.87	1.51	0.00	0.00	-0.36
40.35	0.0024	-1.75	1.42	0.00	0.00	-0.33
40.36	0.0022	-1.63	1.32	0.00	0.00	-0.31
40.37	0.0020	-1.52	1.23	0.00	0.00	-0.29
40.38	0.0019	-1.40	1.14	0.00	0.00	-0.27
40.39	0.0017	-1.28	1.04	0.00	0.00	-0.25
40.40	0.0016	-1.17	0.95	0.00	0.00	-0.22
40.41	0.0014	-1.05	0.85	0.00	0.00	-0.20
40.42	0.0013	-0.93	0.76	0.00	0.00	-0.18
40.43	0.0011	-0.82	0.66	0.00	0.00	-0.16
40.44	0.0009	-0.70	0.57	0.00	0.00	-0.14
40.45	0.0008	-0.58	0.47	0.00	0.00	-0.11
40.46	0.0006	-0.47	0.38	0.00	0.00	-0.09
40.47	0.0005	-0.35	0.28	0.00	0.00	-0.07
40.48	0.0003	-0.26	0.22	0.00	0.00	-0.05
40.49	0.0002	-0.19	0.17	0.00	0.00	-0.02
40.50	0.0000	-0.16	0.15	0.00	0.00	0.00
40.51	-0.0002	-0.17	0.19	0.00	0.00	0.02
40.52	-0.0003	-0.22	0.26	0.00	0.00	0.04
40.53	-0.0005	-0.28	0.35	0.00	0.00	0.07
40.54	-0.0006	-0.38	0.47	0.00	0.00	0.09
40.55	-0.0008	-0.47	0.58	0.00	0.00	0.11
40.56	-0.0009	-0.57	0.70	0.00	0.00	0.13
40.57	-0.0011	-0.66	0.82	0.00	0.00	0.15
40.58	-0.0013	-0.76	0.93	0.00	0.00	0.17
40.59	-0.0014	-0.85	1.05	0.00	0.00	0.20
40.60	-0.0016	-0.95	1.17	0.00	0.00	0.22
40.61	-0.0017	-1.04	1.28	0.00	0.00	0.24
40.62	-0.0019	-1.14	1.40	0.00	0.00	0.26
40.63	-0.0020	-1.23	1.52	0.00	0.00	0.28
40.64	-0.0022	-1.32	1.63	0.00	0.00	0.31
40.65	-0.0024	-1.42	1.75	0.00	0.00	0.33
40.66	-0.0025	-1.51	1.87	0.00	0.00	0.35
40.67	-0.0027	-1.61	1.98	0.00	0.00	0.37
40.68	-0.0028	-1.70	2.10	0.00	0.00	0.39
40.69	-0.0030	-1.80	2.22	0.00	0.00	0.41
40.70	-0.0032	-1.89	2.33	0.00	0.00	0.44
40.71	-0.0033	-1.99	2.45	0.00	0.00	0.46
40.72	-0.0035	-2.08	2.57	0.00	0.00	0.48
40.73	-0.0036	-2.18	2.68	0.00	0.00	0.50
40.74	-0.0038	-2.27	2.80	0.00	0.00	0.52
40.75	-0.0040	-2.34	2.91	0.00	0.00	0.56
40.76	-0.0041	-2.37	3.00	0.00	0.00	0.63
40.77	-0.0043	-2.37	3.09	0.00	0.00	0.71
40.78	-0.0046	-2.35	3.16	0.00	0.00	0.81

40.79	-0.0048	-2.30	3.24	0.00	0.00	0.93
40.80	-0.0050	-2.25	3.30	0.00	0.00	1.05
40.81	-0.0053	-2.18	3.36	0.00	0.00	1.18
40.82	-0.0055	-2.11	3.43	0.00	0.00	1.31
40.83	-0.0057	-2.03	3.49	0.00	0.00	1.45
40.84	-0.0060	-1.95	3.54	0.00	0.00	1.59
40.85	-0.0062	-1.86	3.60	0.00	0.00	1.73
40.86	-0.0065	-1.78	3.66	0.00	0.00	1.87
40.87	-0.0067	-1.69	3.71	0.00	-0.01	2.01
40.88	-0.0070	-1.61	3.77	0.00	-0.01	2.16
40.89	-0.0072	-1.51	3.82	0.00	-0.01	2.30
40.90	-0.0075	-1.42	3.88	0.00	-0.01	2.45
40.91	-0.0077	-1.33	3.93	0.00	-0.01	2.60
40.92	-0.0080	-1.24	3.99	0.00	-0.01	2.74
40.93	-0.0082	-1.15	4.04	0.00	-0.01	2.89
40.94	-0.0085	-1.05	4.10	0.00	-0.01	3.04
40.95	-0.0087	-0.96	4.15	0.00	-0.01	3.18
40.96	-0.0089	-0.87	4.20	0.00	-0.01	3.33
40.97	-0.0092	-0.77	4.26	0.00	-0.01	3.48
40.98	-0.0095	-0.67	4.31	0.00	-0.01	3.63
40.99	-0.0097	-0.58	4.36	0.00	-0.01	3.78
41.00	-0.0100	-0.48	4.42	0.00	-0.01	3.93
41.01	-0.0098	-0.57	4.40	0.00	-0.01	3.82
41.02	-0.0094	-0.68	4.30	0.00	-0.01	3.62
41.03	-0.0092	-0.77	4.25	0.00	-0.01	3.48
41.04	-0.0090	-0.87	4.21	0.00	-0.01	3.34
41.05	-0.0087	-0.96	4.15	0.00	-0.01	3.18
41.06	-0.0084	-1.05	4.10	0.00	-0.01	3.03
41.07	-0.0082	-1.15	4.04	0.00	-0.01	2.89
41.08	-0.0080	-1.24	3.99	0.00	-0.01	2.74
41.09	-0.0077	-1.33	3.93	0.00	-0.01	2.60
41.10	-0.0075	-1.42	3.88	0.00	-0.01	2.45
41.11	-0.0072	-1.51	3.82	0.00	-0.01	2.30
41.12	-0.0070	-1.61	3.77	0.00	-0.01	2.16
41.13	-0.0067	-1.69	3.71	0.00	-0.01	2.01
41.14	-0.0065	-1.78	3.66	0.00	0.00	1.87
41.15	-0.0062	-1.86	3.60	0.00	0.00	1.73
41.16	-0.0060	-1.95	3.54	0.00	0.00	1.59
41.17	-0.0057	-2.03	3.49	0.00	0.00	1.45
41.18	-0.0055	-2.11	3.43	0.00	0.00	1.31
41.19	-0.0053	-2.18	3.37	0.00	0.00	1.18
41.20	-0.0050	-2.25	3.30	0.00	0.00	1.05
41.21	-0.0048	-2.30	3.24	0.00	0.00	0.93
41.22	-0.0046	-2.34	3.16	0.00	0.00	0.81
41.23	-0.0043	-2.37	3.09	0.00	0.00	0.71
41.24	-0.0041	-2.37	3.00	0.00	0.00	0.63
41.25	-0.0039	-2.34	2.91	0.00	0.00	0.56
41.26	-0.0038	-2.27	2.80	0.00	0.00	0.53
41.27	-0.0036	-2.18	2.68	0.00	0.00	0.50
41.28	-0.0035	-2.08	2.57	0.00	0.00	0.48
41.29	-0.0033	-1.99	2.45	0.00	0.00	0.46
41.30	-0.0032	-1.89	2.33	0.00	0.00	0.43
41.31	-0.0030	-1.80	2.22	0.00	0.00	0.41
41.32	-0.0028	-1.70	2.10	0.00	0.00	0.39
41.33	-0.0027	-1.61	1.98	0.00	0.00	0.37
41.34	-0.0025	-1.51	1.87	0.00	0.00	0.35
41.35	-0.0024	-1.42	1.75	0.00	0.00	0.33

41.36	-0.0022	-1.32	1.63	0.00	0.00	0.31
41.37	-0.0020	-1.23	1.52	0.00	0.00	0.28
41.38	-0.0019	-1.14	1.40	0.00	0.00	0.26
41.39	-0.0017	-1.04	1.28	0.00	0.00	0.24
41.40	-0.0016	-0.95	1.17	0.00	0.00	0.22
41.41	-0.0014	-0.85	1.05	0.00	0.00	0.20
41.42	-0.0013	-0.76	0.93	0.00	0.00	0.17
41.43	-0.0011	-0.66	0.82	0.00	0.00	0.15
41.44	-0.0009	-0.57	0.70	0.00	0.00	0.13
41.45	-0.0008	-0.47	0.58	0.00	0.00	0.11
41.46	-0.0006	-0.38	0.47	0.00	0.00	0.09
41.47	-0.0005	-0.28	0.35	0.00	0.00	0.07
41.48	-0.0003	-0.22	0.26	0.00	0.00	0.04
41.49	-0.0002	-0.17	0.19	0.00	0.00	0.02
41.50	0.0000	-0.15	0.16	0.00	0.00	0.00
41.51	0.0002	-0.19	0.17	0.00	0.00	-0.02
41.52	0.0003	-0.26	0.22	0.00	0.00	-0.05
41.53	0.0005	-0.35	0.28	0.00	0.00	-0.07
41.54	0.0006	-0.47	0.38	0.00	0.00	-0.09
41.55	0.0008	-0.58	0.47	0.00	0.00	-0.11
41.56	0.0009	-0.70	0.57	0.00	0.00	-0.14
41.57	0.0011	-0.82	0.66	0.00	0.00	-0.16
41.58	0.0013	-0.93	0.76	0.00	0.00	-0.18
41.59	0.0014	-1.05	0.85	0.00	0.00	-0.20
41.60	0.0016	-1.17	0.95	0.00	0.00	-0.22
41.61	0.0017	-1.28	1.04	0.00	0.00	-0.25
41.62	0.0019	-1.40	1.14	0.00	0.00	-0.27
41.63	0.0020	-1.52	1.23	0.00	0.00	-0.29
41.64	0.0022	-1.63	1.32	0.00	0.00	-0.31
41.65	0.0024	-1.75	1.42	0.00	0.00	-0.33
41.66	0.0025	-1.87	1.51	0.00	0.00	-0.36
41.67	0.0027	-1.98	1.61	0.00	0.00	-0.38
41.68	0.0028	-2.10	1.70	0.00	0.00	-0.40
41.69	0.0030	-2.22	1.80	0.00	0.00	-0.42
41.70	0.0032	-2.33	1.89	0.00	0.00	-0.45
41.71	0.0033	-2.45	1.99	0.00	0.00	-0.47
41.72	0.0035	-2.57	2.08	0.00	0.00	-0.49
41.73	0.0036	-2.68	2.18	0.00	0.00	-0.51
41.74	0.0038	-2.80	2.27	0.00	0.00	-0.53
41.75	0.0040	-2.91	2.34	0.00	0.00	-0.57
41.76	0.0041	-3.00	2.37	0.00	0.00	-0.64
41.77	0.0043	-3.09	2.37	0.00	0.00	-0.73
41.78	0.0046	-3.16	2.35	0.00	0.00	-0.83
41.79	0.0048	-3.24	2.30	0.00	0.00	-0.94
41.80	0.0050	-3.30	2.25	0.00	0.00	-1.06
41.81	0.0053	-3.36	2.18	0.00	0.00	-1.19
41.82	0.0055	-3.43	2.11	0.00	0.00	-1.33
41.83	0.0057	-3.49	2.03	0.00	0.00	-1.46
41.84	0.0060	-3.54	1.95	0.00	0.00	-1.60
41.85	0.0062	-3.60	1.86	0.00	0.00	-1.74
41.86	0.0065	-3.66	1.78	0.00	0.00	-1.89
41.87	0.0067	-3.71	1.69	-0.01	0.00	-2.03
41.88	0.0070	-3.77	1.61	-0.01	0.00	-2.17
41.89	0.0072	-3.82	1.51	-0.01	0.00	-2.32
41.90	0.0075	-3.88	1.42	-0.01	0.00	-2.46
41.91	0.0077	-3.93	1.33	-0.01	0.00	-2.61
41.92	0.0080	-3.99	1.24	-0.01	0.00	-2.76

41.93	0.0082	-4.04	1.15	-0.01	0.00	-2.90
41.94	0.0085	-4.10	1.05	-0.01	0.00	-3.05
41.95	0.0087	-4.15	0.96	-0.01	0.00	-3.20
41.96	0.0089	-4.20	0.87	-0.01	0.00	-3.35
41.97	0.0092	-4.26	0.77	-0.01	0.00	-3.50
41.98	0.0095	-4.31	0.67	-0.01	0.00	-3.65
41.99	0.0097	-4.36	0.58	-0.01	0.00	-3.79
42.00	0.0100	-4.42	0.48	-0.01	0.00	-3.95
42.01	0.0098	-4.40	0.57	-0.01	0.00	-3.84
42.02	0.0094	-4.30	0.68	-0.01	0.00	-3.63
42.03	0.0092	-4.25	0.77	-0.01	0.00	-3.49
42.04	0.0090	-4.21	0.87	-0.01	0.00	-3.35
42.05	0.0087	-4.15	0.96	-0.01	0.00	-3.20
42.06	0.0084	-4.10	1.05	-0.01	0.00	-3.05
42.07	0.0082	-4.04	1.15	-0.01	0.00	-2.90
42.08	0.0080	-3.99	1.24	-0.01	0.00	-2.76
42.09	0.0077	-3.93	1.33	-0.01	0.00	-2.61
42.10	0.0075	-3.88	1.42	-0.01	0.00	-2.46
42.11	0.0072	-3.82	1.51	-0.01	0.00	-2.32
42.12	0.0070	-3.77	1.61	-0.01	0.00	-2.17
42.13	0.0067	-3.71	1.69	-0.01	0.00	-2.03
42.14	0.0065	-3.66	1.78	0.00	0.00	-1.89
42.15	0.0062	-3.60	1.86	0.00	0.00	-1.74
42.16	0.0060	-3.54	1.95	0.00	0.00	-1.60
42.17	0.0057	-3.49	2.03	0.00	0.00	-1.46
42.18	0.0055	-3.43	2.11	0.00	0.00	-1.33
42.19	0.0053	-3.37	2.18	0.00	0.00	-1.19
42.20	0.0050	-3.30	2.25	0.00	0.00	-1.06
42.21	0.0048	-3.24	2.30	0.00	0.00	-0.94
42.22	0.0046	-3.16	2.34	0.00	0.00	-0.83
42.23	0.0043	-3.09	2.37	0.00	0.00	-0.73
42.24	0.0041	-3.00	2.37	0.00	0.00	-0.64
42.25	0.0039	-2.91	2.34	0.00	0.00	-0.57
42.26	0.0038	-2.80	2.27	0.00	0.00	-0.54
42.27	0.0036	-2.68	2.18	0.00	0.00	-0.51
42.28	0.0035	-2.57	2.08	0.00	0.00	-0.49
42.29	0.0033	-2.45	1.99	0.00	0.00	-0.47
42.30	0.0032	-2.33	1.89	0.00	0.00	-0.44
42.31	0.0030	-2.22	1.80	0.00	0.00	-0.42
42.32	0.0028	-2.10	1.70	0.00	0.00	-0.40
42.33	0.0027	-1.98	1.61	0.00	0.00	-0.38
42.34	0.0025	-1.87	1.51	0.00	0.00	-0.36
42.35	0.0024	-1.75	1.42	0.00	0.00	-0.33
42.36	0.0022	-1.63	1.32	0.00	0.00	-0.31
42.37	0.0020	-1.52	1.23	0.00	0.00	-0.29
42.38	0.0019	-1.40	1.14	0.00	0.00	-0.27
42.39	0.0017	-1.28	1.04	0.00	0.00	-0.25
42.40	0.0016	-1.17	0.95	0.00	0.00	-0.22
42.41	0.0014	-1.05	0.85	0.00	0.00	-0.20
42.42	0.0013	-0.93	0.76	0.00	0.00	-0.18
42.43	0.0011	-0.82	0.66	0.00	0.00	-0.16
42.44	0.0009	-0.70	0.57	0.00	0.00	-0.14
42.45	0.0008	-0.58	0.47	0.00	0.00	-0.11
42.46	0.0006	-0.47	0.38	0.00	0.00	-0.09
42.47	0.0005	-0.35	0.28	0.00	0.00	-0.07
42.48	0.0003	-0.26	0.22	0.00	0.00	-0.05
42.49	0.0002	-0.19	0.17	0.00	0.00	-0.02

42.50	0.0000	-0.16	0.15	0.00	0.00	0.00
42.51	-0.0002	-0.17	0.19	0.00	0.00	0.02
42.52	-0.0003	-0.22	0.26	0.00	0.00	0.04
42.53	-0.0005	-0.28	0.35	0.00	0.00	0.07
42.54	-0.0006	-0.38	0.47	0.00	0.00	0.09
42.55	-0.0008	-0.47	0.58	0.00	0.00	0.11
42.56	-0.0009	-0.57	0.70	0.00	0.00	0.13
42.57	-0.0011	-0.66	0.82	0.00	0.00	0.15
42.58	-0.0013	-0.76	0.93	0.00	0.00	0.17
42.59	-0.0014	-0.85	1.05	0.00	0.00	0.20
42.60	-0.0016	-0.95	1.17	0.00	0.00	0.22
42.61	-0.0017	-1.04	1.28	0.00	0.00	0.24
42.62	-0.0019	-1.14	1.40	0.00	0.00	0.26
42.63	-0.0020	-1.23	1.52	0.00	0.00	0.28
42.64	-0.0022	-1.32	1.63	0.00	0.00	0.31
42.65	-0.0024	-1.42	1.75	0.00	0.00	0.33
42.66	-0.0025	-1.51	1.87	0.00	0.00	0.35
42.67	-0.0027	-1.61	1.98	0.00	0.00	0.37
42.68	-0.0028	-1.70	2.10	0.00	0.00	0.39
42.69	-0.0030	-1.80	2.22	0.00	0.00	0.41
42.70	-0.0032	-1.89	2.33	0.00	0.00	0.44
42.71	-0.0033	-1.99	2.45	0.00	0.00	0.46
42.72	-0.0035	-2.08	2.57	0.00	0.00	0.48
42.73	-0.0036	-2.18	2.68	0.00	0.00	0.50
42.74	-0.0038	-2.27	2.80	0.00	0.00	0.52
42.75	-0.0040	-2.34	2.91	0.00	0.00	0.56
42.76	-0.0041	-2.37	3.00	0.00	0.00	0.63
42.77	-0.0043	-2.37	3.09	0.00	0.00	0.71
42.78	-0.0046	-2.35	3.16	0.00	0.00	0.81
42.79	-0.0048	-2.30	3.24	0.00	0.00	0.93
42.80	-0.0050	-2.25	3.30	0.00	0.00	1.05
42.81	-0.0053	-2.18	3.36	0.00	0.00	1.18
42.82	-0.0055	-2.11	3.43	0.00	0.00	1.31
42.83	-0.0057	-2.03	3.49	0.00	0.00	1.45
42.84	-0.0060	-1.95	3.54	0.00	0.00	1.59
42.85	-0.0062	-1.86	3.60	0.00	0.00	1.73
42.86	-0.0065	-1.78	3.66	0.00	0.00	1.87
42.87	-0.0067	-1.69	3.71	0.00	-0.01	2.01
42.88	-0.0070	-1.61	3.77	0.00	-0.01	2.16
42.89	-0.0072	-1.51	3.82	0.00	-0.01	2.30
42.90	-0.0075	-1.42	3.88	0.00	-0.01	2.45
42.91	-0.0077	-1.33	3.93	0.00	-0.01	2.60
42.92	-0.0080	-1.24	3.99	0.00	-0.01	2.74
42.93	-0.0082	-1.15	4.04	0.00	-0.01	2.89
42.94	-0.0085	-1.05	4.10	0.00	-0.01	3.04
42.95	-0.0087	-0.96	4.15	0.00	-0.01	3.18
42.96	-0.0089	-0.87	4.20	0.00	-0.01	3.33
42.97	-0.0092	-0.77	4.26	0.00	-0.01	3.48
42.98	-0.0095	-0.68	4.31	0.00	-0.01	3.63
42.99	-0.0097	-0.58	4.36	0.00	-0.01	3.78
43.00	-0.0100	-0.48	4.42	0.00	-0.01	3.93
43.01	-0.0098	-0.57	4.40	0.00	-0.01	3.82
43.02	-0.0094	-0.68	4.30	0.00	-0.01	3.62
43.03	-0.0092	-0.77	4.25	0.00	-0.01	3.48
43.04	-0.0090	-0.87	4.21	0.00	-0.01	3.34
43.05	-0.0087	-0.96	4.15	0.00	-0.01	3.18
43.06	-0.0084	-1.05	4.10	0.00	-0.01	3.03

43.07	-0.0082	-1.15	4.04	0.00	-0.01	2.89
43.08	-0.0080	-1.24	3.99	0.00	-0.01	2.74
43.09	-0.0077	-1.33	3.93	0.00	-0.01	2.60
43.10	-0.0075	-1.42	3.88	0.00	-0.01	2.45
43.11	-0.0072	-1.51	3.82	0.00	-0.01	2.30
43.12	-0.0070	-1.61	3.77	0.00	-0.01	2.16
43.13	-0.0067	-1.69	3.71	0.00	-0.01	2.01
43.14	-0.0065	-1.78	3.66	0.00	0.00	1.87
43.15	-0.0062	-1.86	3.60	0.00	0.00	1.73
43.16	-0.0060	-1.95	3.54	0.00	0.00	1.59
43.17	-0.0057	-2.03	3.49	0.00	0.00	1.45
43.18	-0.0055	-2.11	3.43	0.00	0.00	1.31
43.19	-0.0053	-2.18	3.37	0.00	0.00	1.18
43.20	-0.0050	-2.25	3.30	0.00	0.00	1.05
43.21	-0.0048	-2.30	3.24	0.00	0.00	0.93
43.22	-0.0046	-2.34	3.16	0.00	0.00	0.81
43.23	-0.0043	-2.37	3.09	0.00	0.00	0.71
43.24	-0.0041	-2.37	3.00	0.00	0.00	0.63
43.25	-0.0039	-2.34	2.91	0.00	0.00	0.56
43.26	-0.0038	-2.27	2.80	0.00	0.00	0.53
43.27	-0.0036	-2.18	2.68	0.00	0.00	0.50
43.28	-0.0035	-2.08	2.57	0.00	0.00	0.48
43.29	-0.0033	-1.99	2.45	0.00	0.00	0.46
43.30	-0.0032	-1.89	2.33	0.00	0.00	0.43
43.31	-0.0030	-1.80	2.22	0.00	0.00	0.41
43.32	-0.0028	-1.70	2.10	0.00	0.00	0.39
43.33	-0.0027	-1.61	1.98	0.00	0.00	0.37
43.34	-0.0025	-1.51	1.87	0.00	0.00	0.35
43.35	-0.0024	-1.42	1.75	0.00	0.00	0.33
43.36	-0.0022	-1.32	1.63	0.00	0.00	0.31
43.37	-0.0020	-1.23	1.52	0.00	0.00	0.28
43.38	-0.0019	-1.14	1.40	0.00	0.00	0.26
43.39	-0.0017	-1.04	1.28	0.00	0.00	0.24
43.40	-0.0016	-0.95	1.17	0.00	0.00	0.22
43.41	-0.0014	-0.85	1.05	0.00	0.00	0.20
43.42	-0.0013	-0.76	0.93	0.00	0.00	0.17
43.43	-0.0011	-0.66	0.82	0.00	0.00	0.15
43.44	-0.0009	-0.57	0.70	0.00	0.00	0.13
43.45	-0.0008	-0.47	0.58	0.00	0.00	0.11
43.46	-0.0006	-0.38	0.47	0.00	0.00	0.09
43.47	-0.0005	-0.28	0.35	0.00	0.00	0.07
43.48	-0.0003	-0.22	0.26	0.00	0.00	0.04
43.49	-0.0002	-0.17	0.19	0.00	0.00	0.02
43.50	0.0000	-0.15	0.16	0.00	0.00	0.00
43.51	0.0002	-0.19	0.17	0.00	0.00	-0.02
43.52	0.0003	-0.26	0.22	0.00	0.00	-0.05
43.53	0.0005	-0.35	0.28	0.00	0.00	-0.07
43.54	0.0006	-0.47	0.38	0.00	0.00	-0.09
43.55	0.0008	-0.58	0.47	0.00	0.00	-0.11
43.56	0.0009	-0.70	0.57	0.00	0.00	-0.14
43.57	0.0011	-0.82	0.66	0.00	0.00	-0.16
43.58	0.0013	-0.93	0.76	0.00	0.00	-0.18
43.59	0.0014	-1.05	0.85	0.00	0.00	-0.20
43.60	0.0016	-1.17	0.95	0.00	0.00	-0.22
43.61	0.0017	-1.28	1.04	0.00	0.00	-0.25
43.62	0.0019	-1.40	1.14	0.00	0.00	-0.27
43.63	0.0020	-1.52	1.23	0.00	0.00	-0.29

43.64	0.0022	-1.63	1.33	0.00	0.00	-0.31
43.65	0.0024	-1.75	1.42	0.00	0.00	-0.33
43.66	0.0025	-1.87	1.51	0.00	0.00	-0.36
43.67	0.0027	-1.98	1.61	0.00	0.00	-0.38
43.68	0.0028	-2.10	1.70	0.00	0.00	-0.40
43.69	0.0030	-2.22	1.80	0.00	0.00	-0.42
43.70	0.0032	-2.33	1.89	0.00	0.00	-0.45
43.71	0.0033	-2.45	1.99	0.00	0.00	-0.47
43.72	0.0035	-2.57	2.08	0.00	0.00	-0.49
43.73	0.0036	-2.68	2.18	0.00	0.00	-0.51
43.74	0.0038	-2.80	2.27	0.00	0.00	-0.53
43.75	0.0040	-2.91	2.34	0.00	0.00	-0.57
43.76	0.0041	-3.00	2.37	0.00	0.00	-0.64
43.77	0.0043	-3.09	2.37	0.00	0.00	-0.73
43.78	0.0046	-3.16	2.35	0.00	0.00	-0.83
43.79	0.0048	-3.23	2.30	0.00	0.00	-0.94
43.80	0.0050	-3.30	2.25	0.00	0.00	-1.06
43.81	0.0053	-3.36	2.18	0.00	0.00	-1.19
43.82	0.0055	-3.43	2.11	0.00	0.00	-1.33
43.83	0.0057	-3.49	2.03	0.00	0.00	-1.46
43.84	0.0060	-3.54	1.95	0.00	0.00	-1.60
43.85	0.0062	-3.60	1.86	0.00	0.00	-1.74
43.86	0.0065	-3.66	1.78	0.00	0.00	-1.89
43.87	0.0067	-3.71	1.69	-0.01	0.00	-2.03
43.88	0.0070	-3.77	1.61	-0.01	0.00	-2.17
43.89	0.0072	-3.82	1.51	-0.01	0.00	-2.32
43.90	0.0075	-3.88	1.42	-0.01	0.00	-2.46
43.91	0.0077	-3.93	1.33	-0.01	0.00	-2.61
43.92	0.0080	-3.99	1.24	-0.01	0.00	-2.76
43.93	0.0082	-4.04	1.15	-0.01	0.00	-2.90
43.94	0.0085	-4.10	1.05	-0.01	0.00	-3.05
43.95	0.0087	-4.15	0.96	-0.01	0.00	-3.20
43.96	0.0089	-4.20	0.87	-0.01	0.00	-3.35
43.97	0.0092	-4.26	0.77	-0.01	0.00	-3.50
43.98	0.0095	-4.31	0.68	-0.01	0.00	-3.64
43.99	0.0097	-4.36	0.58	-0.01	0.00	-3.79
44.00	0.0100	-4.42	0.48	-0.01	0.00	-3.94
44.01	0.0098	-4.40	0.58	-0.01	0.00	-3.83
44.02	0.0094	-4.29	0.69	-0.01	0.00	-3.61
44.03	0.0091	-4.24	0.79	-0.01	0.00	-3.45
44.04	0.0089	-4.19	0.90	-0.01	0.00	-3.30
44.05	0.0086	-4.13	1.00	-0.01	0.00	-3.13
44.06	0.0083	-4.07	1.10	-0.01	0.00	-2.98
44.07	0.0081	-4.01	1.20	-0.01	0.00	-2.82
44.08	0.0078	-3.95	1.30	-0.01	0.00	-2.66
44.09	0.0075	-3.89	1.40	-0.01	0.00	-2.50
44.10	0.0072	-3.83	1.50	-0.01	0.00	-2.34
44.11	0.0070	-3.77	1.60	-0.01	0.00	-2.18
44.12	0.0067	-3.71	1.69	-0.01	0.00	-2.03
44.13	0.0064	-3.65	1.79	0.00	0.00	-1.87
44.14	0.0062	-3.59	1.88	0.00	0.00	-1.72
44.15	0.0059	-3.53	1.97	0.00	0.00	-1.57
44.16	0.0057	-3.47	2.06	0.00	0.00	-1.42
44.17	0.0054	-3.40	2.14	0.00	0.00	-1.27
44.18	0.0051	-3.33	2.22	0.00	0.00	-1.13
44.19	0.0049	-3.26	2.28	0.00	0.00	-0.99
44.20	0.0046	-3.19	2.33	0.00	0.00	-0.86

44.21	0.0044	-3.11	2.37	0.00	0.00	-0.75
44.22	0.0042	-3.02	2.37	0.00	0.00	-0.65
44.23	0.0040	-2.92	2.35	0.00	0.00	-0.58
44.24	0.0038	-2.79	2.26	0.00	0.00	-0.54
44.25	0.0036	-2.67	2.17	0.00	0.00	-0.51
44.26	0.0034	-2.55	2.07	0.00	0.00	-0.49
44.27	0.0033	-2.42	1.96	0.00	0.00	-0.46
44.28	0.0031	-2.29	1.86	0.00	0.00	-0.44
44.29	0.0029	-2.17	1.76	0.00	0.00	-0.41
44.30	0.0028	-2.04	1.66	0.00	0.00	-0.39
44.31	0.0026	-1.91	1.55	0.00	0.00	-0.37
44.32	0.0024	-1.79	1.45	0.00	0.00	-0.34
44.33	0.0022	-1.66	1.35	0.00	0.00	-0.32
44.34	0.0021	-1.53	1.25	0.00	0.00	-0.29
44.35	0.0019	-1.41	1.14	0.00	0.00	-0.27
44.36	0.0017	-1.28	1.04	0.00	0.00	-0.25
44.37	0.0016	-1.16	0.94	0.00	0.00	-0.22
44.38	0.0014	-1.03	0.83	0.00	0.00	-0.20
44.39	0.0012	-0.90	0.73	0.00	0.00	-0.17
44.40	0.0010	-0.78	0.63	0.00	0.00	-0.15
44.41	0.0009	-0.65	0.53	0.00	0.00	-0.13
44.42	0.0007	-0.52	0.42	0.00	0.00	-0.10
44.43	0.0005	-0.40	0.32	0.00	0.00	-0.08
44.44	0.0004	-0.28	0.23	0.00	0.00	-0.05
44.45	0.0002	-0.21	0.18	0.00	0.00	-0.03
44.46	0.0000	-0.16	0.15	0.00	0.00	-0.01
44.47	-0.0001	-0.17	0.19	0.00	0.00	0.02
44.48	-0.0003	-0.22	0.26	0.00	0.00	0.04
44.49	-0.0005	-0.29	0.36	0.00	0.00	0.07
44.50	-0.0007	-0.39	0.49	0.00	0.00	0.09
44.51	-0.0008	-0.50	0.61	0.00	0.00	0.11
44.52	-0.0010	-0.60	0.74	0.00	0.00	0.14
44.53	-0.0012	-0.70	0.87	0.00	0.00	0.16
44.54	-0.0013	-0.81	0.99	0.00	0.00	0.19
44.55	-0.0015	-0.91	1.12	0.00	0.00	0.21
44.56	-0.0017	-1.01	1.25	0.00	0.00	0.23
44.57	-0.0019	-1.11	1.37	0.00	0.00	0.26
44.58	-0.0020	-1.22	1.50	0.00	0.00	0.28
44.59	-0.0022	-1.32	1.63	0.00	0.00	0.30
44.60	-0.0024	-1.42	1.75	0.00	0.00	0.33
44.61	-0.0025	-1.52	1.88	0.00	0.00	0.35
44.62	-0.0027	-1.63	2.01	0.00	0.00	0.37
44.63	-0.0029	-1.73	2.13	0.00	0.00	0.40
44.64	-0.0030	-1.83	2.26	0.00	0.00	0.42
44.65	-0.0032	-1.94	2.39	0.00	0.00	0.44
44.66	-0.0034	-2.04	2.51	0.00	0.00	0.47
44.67	-0.0036	-2.14	2.64	0.00	0.00	0.49
44.68	-0.0037	-2.24	2.76	0.00	0.00	0.52
44.69	-0.0039	-2.33	2.88	0.00	0.00	0.55
44.70	-0.0041	-2.37	2.99	0.00	0.00	0.62
44.71	-0.0043	-2.37	3.08	0.00	0.00	0.71
44.72	-0.0046	-2.34	3.17	0.00	0.00	0.82
44.73	-0.0048	-2.30	3.24	0.00	0.00	0.94
44.74	-0.0051	-2.23	3.31	0.00	0.00	1.07
44.75	-0.0053	-2.16	3.38	0.00	0.00	1.22
44.76	-0.0056	-2.08	3.45	0.00	0.00	1.36
44.77	-0.0058	-1.99	3.51	0.00	0.00	1.51

44.78	-0.0061	-1.90	3.57	0.00	0.00	1.66
44.79	-0.0064	-1.81	3.64	0.00	0.00	1.82
44.80	-0.0066	-1.72	3.70	0.00	0.00	1.97
44.81	-0.0069	-1.62	3.76	0.00	-0.01	2.13
44.82	-0.0072	-1.53	3.82	0.00	-0.01	2.28
44.83	-0.0074	-1.43	3.88	0.00	-0.01	2.44
44.84	-0.0077	-1.33	3.93	0.00	-0.01	2.60
44.85	-0.0080	-1.23	3.99	0.00	-0.01	2.76
44.86	-0.0083	-1.13	4.05	0.00	-0.01	2.92
44.87	-0.0085	-1.03	4.11	0.00	-0.01	3.08
44.88	-0.0088	-0.93	4.17	0.00	-0.01	3.24
44.89	-0.0091	-0.82	4.23	0.00	-0.01	3.40
44.90	-0.0093	-0.72	4.29	0.00	-0.01	3.56
44.91	-0.0096	-0.62	4.34	0.00	-0.01	3.72
44.92	-0.0099	-0.51	4.40	0.00	-0.01	3.88
44.93	-0.0102	-0.30	4.42	0.00	-0.01	4.11
44.94	-0.0106	0.00	4.45	0.00	-0.01	4.44
44.95	-0.0110	0.00	4.80	0.00	-0.01	4.79
44.96	-0.0114	0.00	5.16	0.00	-0.01	5.14
44.97	-0.0118	0.00	5.52	0.00	-0.01	5.50
44.98	-0.0124	0.00	6.19	-0.01	-0.01	6.17
44.99	-0.0135	0.00	7.51	-0.01	-0.01	7.49
45.00	-0.0150	0.00	9.32	-0.01	-0.02	9.29
45.01	-0.0150	0.00	9.32	-0.01	-0.02	9.29
45.02	-0.0143	0.00	8.93	-0.01	-0.01	8.90
45.03	-0.0141	0.00	8.79	-0.01	-0.01	8.77
45.04	-0.0138	0.00	8.64	-0.01	-0.01	8.61
45.05	-0.0135	0.00	8.44	-0.01	-0.01	8.42
45.06	-0.0132	0.00	8.27	-0.01	-0.01	8.24
45.07	-0.0129	0.00	8.09	-0.01	-0.01	8.07
45.08	-0.0126	0.00	7.91	-0.01	-0.01	7.89
45.09	-0.0123	0.00	7.74	-0.01	-0.01	7.71
45.10	-0.0120	0.00	7.56	-0.01	-0.01	7.53
45.11	-0.0117	0.00	7.38	-0.01	-0.01	7.36
45.12	-0.0114	0.00	7.20	-0.01	-0.01	7.18
45.13	-0.0111	0.00	7.02	-0.01	-0.01	7.00
45.14	-0.0108	0.00	6.84	-0.01	-0.01	6.82
45.15	-0.0105	0.00	6.67	-0.01	-0.01	6.65
45.16	-0.0102	0.00	6.49	-0.01	-0.01	6.47
45.17	-0.0099	0.00	6.31	-0.01	-0.01	6.29
45.18	-0.0096	0.00	6.13	-0.01	-0.01	6.12
45.19	-0.0093	0.00	5.96	-0.01	-0.01	5.94
45.20	-0.0090	0.00	5.78	-0.01	-0.01	5.76
45.21	-0.0087	0.00	5.60	-0.01	-0.01	5.58
45.22	-0.0085	0.00	5.42	-0.01	-0.01	5.41
45.23	-0.0082	0.00	5.24	-0.01	-0.01	5.23
45.24	-0.0079	0.00	5.06	-0.01	-0.01	5.05
45.25	-0.0076	0.00	4.89	-0.01	-0.01	4.87
45.26	-0.0073	0.00	4.71	-0.01	-0.01	4.70
45.27	-0.0070	0.00	4.53	-0.01	-0.01	4.52
45.28	-0.0067	0.00	4.35	-0.01	-0.01	4.34
45.29	-0.0064	0.00	4.18	-0.01	-0.01	4.16
45.30	-0.0061	0.00	4.00	-0.01	-0.01	3.99
45.31	-0.0058	0.00	3.82	0.00	-0.01	3.81
45.32	-0.0055	0.00	3.65	0.00	0.00	3.64
45.33	-0.0052	0.00	3.47	0.00	0.00	3.46
45.34	-0.0049	0.00	3.29	0.00	0.00	3.28

45.35	-0.0046	0.00	3.12	0.00	0.00	3.11
45.36	-0.0043	0.00	2.94	0.00	0.00	2.93
45.37	-0.0040	0.00	2.76	0.00	0.00	2.76
45.38	-0.0037	0.00	2.59	0.00	0.00	2.58
45.39	-0.0034	0.00	2.41	0.00	0.00	2.40
45.40	-0.0031	0.00	2.23	0.00	0.00	2.23
45.41	-0.0028	0.00	2.06	0.00	0.00	2.05
45.42	-0.0025	0.00	1.88	0.00	0.00	1.88
45.43	-0.0022	0.00	1.71	0.00	0.00	1.71
45.44	-0.0019	0.00	1.43	0.00	0.00	1.43
45.45	-0.0015	0.00	1.10	0.00	0.00	1.10
45.46	-0.0011	0.00	0.83	0.00	0.00	0.83
45.47	-0.0008	0.00	0.65	0.00	0.00	0.64
45.48	-0.0006	-0.10	0.67	0.00	0.00	0.57
45.49	-0.0004	-0.22	0.76	0.00	0.00	0.54
45.50	-0.0002	-0.36	0.87	0.00	0.00	0.51
45.51	0.0000	-0.50	0.97	0.00	0.00	0.48
45.52	0.0002	-0.63	1.08	0.00	0.00	0.45
45.53	0.0004	-0.77	1.19	0.00	0.00	0.42
45.54	0.0006	-0.91	1.30	0.00	0.00	0.39
45.55	0.0007	-1.05	1.41	0.00	0.00	0.36
45.56	0.0009	-1.18	1.52	0.00	0.00	0.34
45.57	0.0011	-1.32	1.63	0.00	0.00	0.31
45.58	0.0013	-1.46	1.74	0.00	0.00	0.28
45.59	0.0015	-1.60	1.85	0.00	0.00	0.25
45.60	0.0017	-1.73	1.96	0.00	0.00	0.22
45.61	0.0019	-1.87	2.07	0.00	0.00	0.20
45.62	0.0021	-2.01	2.18	0.00	0.00	0.17
45.63	0.0022	-2.15	2.29	0.00	0.00	0.14
45.64	0.0024	-2.28	2.40	0.00	0.00	0.11
45.65	0.0026	-2.42	2.51	0.00	0.00	0.08
45.66	0.0028	-2.56	2.62	0.00	0.00	0.06
45.67	0.0030	-2.69	2.73	0.00	0.00	0.03
45.68	0.0032	-2.83	2.84	0.00	0.00	0.00
45.69	0.0034	-2.97	2.95	0.00	0.00	-0.03
45.70	0.0036	-3.11	3.06	0.00	0.00	-0.06
45.71	0.0037	-3.24	3.17	0.00	0.00	-0.08
45.72	0.0039	-3.38	3.28	0.00	0.00	-0.11
45.73	0.0041	-3.50	3.34	0.00	0.00	-0.17
45.74	0.0044	-3.61	3.35	0.00	0.00	-0.26
45.75	0.0046	-3.69	3.31	0.00	0.00	-0.39
45.76	0.0049	-3.77	3.24	0.00	0.00	-0.54
45.77	0.0052	-3.84	3.15	0.00	0.00	-0.70
45.78	0.0055	-3.91	3.05	0.00	0.00	-0.87
45.79	0.0058	-3.98	2.94	0.00	0.00	-1.04
45.80	0.0061	-4.04	2.83	-0.01	0.00	-1.22
45.81	0.0064	-4.10	2.71	-0.01	0.00	-1.39
45.82	0.0067	-4.16	2.60	-0.01	0.00	-1.57
45.83	0.0070	-4.23	2.48	-0.01	0.00	-1.75
45.84	0.0073	-4.29	2.36	-0.01	0.00	-1.93
45.85	0.0076	-4.35	2.24	-0.01	0.00	-2.11
45.86	0.0079	-4.41	2.12	-0.01	0.00	-2.29
45.87	0.0082	-4.47	2.00	-0.01	0.00	-2.47
45.88	0.0085	-4.53	1.88	-0.01	0.00	-2.66
45.89	0.0088	-4.59	1.76	-0.01	0.00	-2.83
45.90	0.0091	-4.65	1.64	-0.01	0.00	-3.02
45.91	0.0094	-4.71	1.52	-0.01	0.00	-3.20

45.92	0.0097	-4.77	1.40	-0.01	0.00	-3.38
45.93	0.0100	-4.83	1.28	-0.01	0.00	-3.56
45.94	0.0103	-4.84	1.01	-0.01	0.00	-3.84
45.95	0.0108	-4.80	0.58	-0.01	0.00	-4.23
45.96	0.0112	-4.75	0.12	-0.01	0.00	-4.64
45.97	0.0117	-5.03	0.00	-0.01	0.00	-5.05
45.98	0.0123	-5.63	0.00	-0.01	-0.01	-5.65
45.99	0.0133	-6.94	0.00	-0.01	-0.01	-6.96
46.00	0.0150	-8.97	0.00	-0.02	-0.01	-9.00
46.01	0.0151	-9.18	0.00	-0.02	-0.02	-9.21
46.02	0.0145	-8.78	0.00	-0.02	-0.01	-8.81
46.03	0.0142	-8.62	0.00	-0.02	-0.01	-8.65
46.04	0.0140	-8.47	0.00	-0.02	-0.01	-8.50
46.05	0.0136	-8.26	0.00	-0.01	-0.01	-8.29
46.06	0.0133	-8.08	0.00	-0.01	-0.01	-8.10
46.07	0.0130	-7.90	0.00	-0.01	-0.01	-7.93
46.08	0.0127	-7.71	0.00	-0.01	-0.01	-7.74
46.09	0.0124	-7.53	0.00	-0.01	-0.01	-7.55
46.10	0.0121	-7.34	0.00	-0.01	-0.01	-7.37
46.11	0.0118	-7.16	0.00	-0.01	-0.01	-7.18
46.12	0.0115	-6.97	0.00	-0.01	-0.01	-7.00
46.13	0.0112	-6.79	0.00	-0.01	-0.01	-6.81
46.14	0.0109	-6.60	0.00	-0.01	-0.01	-6.63
46.15	0.0106	-6.42	0.00	-0.01	-0.01	-6.44
46.16	0.0103	-6.24	0.00	-0.01	-0.01	-6.26
46.17	0.0100	-6.05	0.00	-0.01	-0.01	-6.07
46.18	0.0097	-5.87	0.00	-0.01	-0.01	-5.89
46.19	0.0094	-5.68	0.00	-0.01	-0.01	-5.70
46.20	0.0091	-5.50	0.00	-0.01	-0.01	-5.52
46.21	0.0088	-5.31	0.00	-0.01	-0.01	-5.33
46.22	0.0085	-5.13	0.00	-0.01	-0.01	-5.14
46.23	0.0082	-4.94	0.00	-0.01	-0.01	-4.96
46.24	0.0079	-4.76	0.00	-0.01	-0.01	-4.78
46.25	0.0076	-4.57	0.00	-0.01	-0.01	-4.59
46.26	0.0073	-4.39	0.00	-0.01	-0.01	-4.41
46.27	0.0069	-4.21	0.00	-0.01	-0.01	-4.22
46.28	0.0066	-4.02	0.00	-0.01	-0.01	-4.03
46.29	0.0063	-3.84	0.00	-0.01	-0.01	-3.85
46.30	0.0060	-3.65	0.00	-0.01	-0.01	-3.66
46.31	0.0057	-3.47	0.00	-0.01	-0.01	-3.48
46.32	0.0054	-3.28	0.00	-0.01	0.00	-3.29
46.33	0.0051	-3.10	0.00	-0.01	0.00	-3.11
46.34	0.0048	-2.91	0.00	0.00	0.00	-2.92
46.35	0.0045	-2.73	0.00	0.00	0.00	-2.74
46.36	0.0042	-2.55	0.00	0.00	0.00	-2.55
46.37	0.0039	-2.36	0.00	0.00	0.00	-2.37
46.38	0.0036	-2.18	0.00	0.00	0.00	-2.18
46.39	0.0033	-1.99	0.00	0.00	0.00	-2.00
46.40	0.0030	-1.81	0.00	0.00	0.00	-1.81
46.41	0.0027	-1.62	0.00	0.00	0.00	-1.63
46.42	0.0024	-1.43	0.00	0.00	0.00	-1.44
46.43	0.0020	-1.10	0.00	0.00	0.00	-1.10
46.44	0.0015	-0.68	0.00	0.00	0.00	-0.68
46.45	0.0011	-0.61	0.27	0.00	0.00	-0.34
46.46	0.0008	-0.54	0.36	0.00	0.00	-0.18
46.47	0.0006	-0.42	0.31	0.00	0.00	-0.11
46.48	0.0004	-0.29	0.22	0.00	0.00	-0.07

46.49	0.0002	-0.15	0.11	0.00	0.00	-0.04
46.50	0.0000	-0.05	0.04	0.00	0.00	-0.01
46.51	-0.0002	-0.10	0.12	0.00	0.00	0.02
46.52	-0.0003	-0.21	0.26	0.00	0.00	0.05
46.53	-0.0005	-0.32	0.40	0.00	0.00	0.08
46.54	-0.0007	-0.43	0.53	0.00	0.00	0.11
46.55	-0.0010	-0.43	0.64	0.00	0.00	0.20
46.56	-0.0013	-0.18	0.65	0.00	0.00	0.47
46.57	-0.0018	0.00	0.84	0.00	0.00	0.84
46.58	-0.0022	0.00	1.19	0.00	0.00	1.18
46.59	-0.0025	0.00	1.41	0.00	0.00	1.40
46.60	-0.0028	0.00	1.60	0.00	0.00	1.59
46.61	-0.0031	0.00	1.78	0.00	0.00	1.78
46.62	-0.0034	0.00	1.97	0.00	0.00	1.96
46.63	-0.0037	0.00	2.15	0.00	0.00	2.15
46.64	-0.0040	0.00	2.34	0.00	0.00	2.33
46.65	-0.0043	0.00	2.52	0.00	0.00	2.51
46.66	-0.0046	0.00	2.71	0.00	0.00	2.70
46.67	-0.0049	0.00	2.89	0.00	-0.01	2.88
46.68	-0.0052	0.00	3.08	0.00	-0.01	3.07
46.69	-0.0055	0.00	3.26	0.00	-0.01	3.25
46.70	-0.0058	0.00	3.45	-0.01	-0.01	3.44
46.71	-0.0061	0.00	3.63	-0.01	-0.01	3.62
46.72	-0.0064	0.00	3.81	-0.01	-0.01	3.80
46.73	-0.0067	0.00	4.00	-0.01	-0.01	3.99
46.74	-0.0071	0.00	4.18	-0.01	-0.01	4.17
46.75	-0.0074	0.00	4.37	-0.01	-0.01	4.35
46.76	-0.0077	0.00	4.55	-0.01	-0.01	4.54
46.77	-0.0080	0.00	4.74	-0.01	-0.01	4.72
46.78	-0.0083	0.00	4.92	-0.01	-0.01	4.91
46.79	-0.0086	0.00	5.11	-0.01	-0.01	5.09
46.80	-0.0089	0.00	5.29	-0.01	-0.01	5.27
46.81	-0.0092	0.00	5.47	-0.01	-0.01	5.46
46.82	-0.0095	0.00	5.66	-0.01	-0.01	5.64
46.83	-0.0098	0.00	5.84	-0.01	-0.01	5.82
46.84	-0.0101	0.00	6.03	-0.01	-0.01	6.01
46.85	-0.0104	0.00	6.21	-0.01	-0.01	6.19
46.86	-0.0107	0.00	6.40	-0.01	-0.01	6.38
46.87	-0.0110	0.00	6.58	-0.01	-0.01	6.56
46.88	-0.0113	0.00	6.77	-0.01	-0.01	6.74
46.89	-0.0116	0.00	6.95	-0.01	-0.01	6.93
46.90	-0.0119	0.00	7.14	-0.01	-0.01	7.11
46.91	-0.0122	0.00	7.32	-0.01	-0.01	7.30
46.92	-0.0125	0.00	7.50	-0.01	-0.01	7.48
46.93	-0.0128	0.00	7.69	-0.01	-0.01	7.66
46.94	-0.0131	0.00	7.87	-0.01	-0.01	7.85
46.95	-0.0134	0.00	8.06	-0.01	-0.01	8.03
46.96	-0.0137	0.00	8.24	-0.01	-0.02	8.21
46.97	-0.0140	0.00	8.43	-0.01	-0.02	8.40
46.98	-0.0143	0.00	8.61	-0.01	-0.02	8.58
46.99	-0.0146	0.00	8.80	-0.01	-0.02	8.77
47.00	-0.0150	0.00	9.07	-0.02	-0.02	9.04
47.01	-0.0148	0.00	8.94	-0.01	-0.02	8.91
47.02	-0.0144	0.00	8.67	-0.01	-0.02	8.64
47.03	-0.0141	0.00	8.50	-0.01	-0.02	8.47
47.04	-0.0138	0.00	8.33	-0.01	-0.02	8.30
47.05	-0.0135	0.00	8.13	-0.01	-0.01	8.11

47.06	-0.0132	0.00	7.95	-0.01	-0.01	7.92
47.07	-0.0129	0.00	7.77	-0.01	-0.01	7.74
47.08	-0.0126	0.00	7.58	-0.01	-0.01	7.56
47.09	-0.0123	0.00	7.40	-0.01	-0.01	7.38
47.10	-0.0120	0.00	7.22	-0.01	-0.01	7.19
47.11	-0.0117	0.00	7.03	-0.01	-0.01	7.01
47.12	-0.0114	0.00	6.85	-0.01	-0.01	6.83
47.13	-0.0111	0.00	6.67	-0.01	-0.01	6.65
47.14	-0.0108	0.00	6.48	-0.01	-0.01	6.46
47.15	-0.0105	0.00	6.30	-0.01	-0.01	6.28
47.16	-0.0102	0.00	6.12	-0.01	-0.01	6.10
47.17	-0.0099	0.00	5.93	-0.01	-0.01	5.91
47.18	-0.0096	0.00	5.75	-0.01	-0.01	5.73
47.19	-0.0093	0.00	5.57	-0.01	-0.01	5.55
47.20	-0.0090	0.00	5.38	-0.01	-0.01	5.36
47.21	-0.0087	0.00	5.20	-0.01	-0.01	5.18
47.22	-0.0083	0.00	5.02	-0.01	-0.01	5.00
47.23	-0.0080	0.00	4.83	-0.01	-0.01	4.82
47.24	-0.0077	0.00	4.65	-0.01	-0.01	4.63
47.25	-0.0074	0.00	4.46	-0.01	-0.01	4.45
47.26	-0.0071	0.00	4.28	-0.01	-0.01	4.27
47.27	-0.0068	0.00	4.10	-0.01	-0.01	4.08
47.28	-0.0065	0.00	3.91	-0.01	-0.01	3.90
47.29	-0.0062	0.00	3.73	-0.01	-0.01	3.72
47.30	-0.0059	0.00	3.55	-0.01	-0.01	3.53
47.31	-0.0056	0.00	3.36	-0.01	-0.01	3.35
47.32	-0.0053	0.00	3.18	0.00	-0.01	3.17
47.33	-0.0050	0.00	2.99	0.00	-0.01	2.99
47.34	-0.0047	0.00	2.81	0.00	0.00	2.80
47.35	-0.0044	0.00	2.63	0.00	0.00	2.62
47.36	-0.0041	0.00	2.44	0.00	0.00	2.44
47.37	-0.0038	0.00	2.26	0.00	0.00	2.25
47.38	-0.0035	0.00	2.08	0.00	0.00	2.07
47.39	-0.0032	0.00	1.89	0.00	0.00	1.89
47.40	-0.0029	0.00	1.71	0.00	0.00	1.70
47.41	-0.0026	0.00	1.53	0.00	0.00	1.52
47.42	-0.0023	0.00	1.33	0.00	0.00	1.32
47.43	-0.0019	0.00	0.99	0.00	0.00	0.98
47.44	-0.0014	-0.03	0.63	0.00	0.00	0.60
47.45	-0.0010	-0.36	0.63	0.00	0.00	0.27
47.46	-0.0008	-0.39	0.54	0.00	0.00	0.15
47.47	-0.0006	-0.33	0.42	0.00	0.00	0.10
47.48	-0.0004	-0.23	0.29	0.00	0.00	0.06
47.49	-0.0002	-0.12	0.15	0.00	0.00	0.03
47.50	0.0000	-0.05	0.05	0.00	0.00	0.00
47.51	0.0002	-0.12	0.09	0.00	0.00	-0.03
47.52	0.0004	-0.26	0.20	0.00	0.00	-0.06
47.53	0.0006	-0.40	0.31	0.00	0.00	-0.09
47.54	0.0007	-0.53	0.41	0.00	0.00	-0.12
47.55	0.0010	-0.60	0.33	0.00	0.00	-0.27
47.56	0.0014	-0.61	0.02	0.00	0.00	-0.58
47.57	0.0019	-0.98	0.00	0.00	0.00	-0.98
47.58	0.0023	-1.33	0.00	0.00	0.00	-1.34
47.59	0.0026	-1.56	0.00	0.00	0.00	-1.56
47.60	0.0029	-1.74	0.00	0.00	0.00	-1.75
47.61	0.0032	-1.93	0.00	0.00	0.00	-1.94
47.62	0.0035	-2.12	0.00	0.00	0.00	-2.12

47.63	0.0038	-2.30	0.00	0.00	0.00	-2.31
47.64	0.0041	-2.48	0.00	0.00	0.00	-2.49
47.65	0.0044	-2.67	0.00	0.00	0.00	-2.68
47.66	0.0047	-2.85	0.00	0.00	0.00	-2.86
47.67	0.0050	-3.04	0.00	-0.01	0.00	-3.04
47.68	0.0053	-3.22	0.00	-0.01	0.00	-3.23
47.69	0.0056	-3.40	0.00	-0.01	-0.01	-3.41
47.70	0.0059	-3.59	0.00	-0.01	-0.01	-3.60
47.71	0.0062	-3.77	0.00	-0.01	-0.01	-3.78
47.72	0.0065	-3.95	0.00	-0.01	-0.01	-3.97
47.73	0.0068	-4.14	0.00	-0.01	-0.01	-4.15
47.74	0.0071	-4.32	0.00	-0.01	-0.01	-4.33
47.75	0.0074	-4.50	0.00	-0.01	-0.01	-4.52
47.76	0.0077	-4.69	0.00	-0.01	-0.01	-4.70
47.77	0.0080	-4.87	0.00	-0.01	-0.01	-4.89
47.78	0.0083	-5.05	0.00	-0.01	-0.01	-5.07
47.79	0.0086	-5.24	0.00	-0.01	-0.01	-5.25
47.80	0.0090	-5.42	0.00	-0.01	-0.01	-5.44
47.81	0.0093	-5.61	0.00	-0.01	-0.01	-5.62
47.82	0.0096	-5.79	0.00	-0.01	-0.01	-5.81
47.83	0.0099	-5.97	0.00	-0.01	-0.01	-5.99
47.84	0.0102	-6.16	0.00	-0.01	-0.01	-6.18
47.85	0.0105	-6.34	0.00	-0.01	-0.01	-6.36
47.86	0.0108	-6.52	0.00	-0.01	-0.01	-6.55
47.87	0.0111	-6.71	0.00	-0.01	-0.01	-6.73
47.88	0.0114	-6.89	0.00	-0.01	-0.01	-6.91
47.89	0.0117	-7.07	0.00	-0.01	-0.01	-7.10
47.90	0.0120	-7.26	0.00	-0.01	-0.01	-7.28
47.91	0.0123	-7.44	0.00	-0.01	-0.01	-7.47
47.92	0.0126	-7.63	0.00	-0.01	-0.01	-7.65
47.93	0.0129	-7.81	0.00	-0.01	-0.01	-7.84
47.94	0.0132	-7.99	0.00	-0.01	-0.01	-8.02
47.95	0.0135	-8.18	0.00	-0.01	-0.01	-8.20
47.96	0.0138	-8.36	0.00	-0.02	-0.01	-8.39
47.97	0.0141	-8.54	0.00	-0.02	-0.01	-8.57
47.98	0.0144	-8.73	0.00	-0.02	-0.01	-8.76
47.99	0.0147	-8.91	0.00	-0.02	-0.01	-8.94
48.00	0.0150	-9.09	0.00	-0.02	-0.02	-9.13
48.01	0.0148	-8.96	0.00	-0.02	-0.01	-8.99
48.02	0.0143	-8.70	0.00	-0.02	-0.01	-8.73
48.03	0.0140	-8.52	0.00	-0.02	-0.01	-8.55
48.04	0.0138	-8.34	0.00	-0.02	-0.01	-8.37
48.05	0.0134	-8.14	0.00	-0.01	-0.01	-8.17
48.06	0.0131	-7.95	0.00	-0.01	-0.01	-7.98
48.07	0.0128	-7.77	0.00	-0.01	-0.01	-7.79
48.08	0.0125	-7.58	0.00	-0.01	-0.01	-7.60
48.09	0.0122	-7.39	0.00	-0.01	-0.01	-7.41
48.10	0.0119	-7.20	0.00	-0.01	-0.01	-7.22
48.11	0.0116	-7.01	0.00	-0.01	-0.01	-7.03
48.12	0.0112	-6.82	0.00	-0.01	-0.01	-6.84
48.13	0.0109	-6.63	0.00	-0.01	-0.01	-6.65
48.14	0.0106	-6.44	0.00	-0.01	-0.01	-6.46
48.15	0.0103	-6.25	0.00	-0.01	-0.01	-6.27
48.16	0.0100	-6.06	0.00	-0.01	-0.01	-6.08
48.17	0.0097	-5.87	0.00	-0.01	-0.01	-5.89
48.18	0.0094	-5.68	0.00	-0.01	-0.01	-5.70
48.19	0.0091	-5.49	0.00	-0.01	-0.01	-5.51

48.20	0.0087	-5.30	0.00	-0.01	-0.01	-5.32
48.21	0.0084	-5.11	0.00	-0.01	-0.01	-5.13
48.22	0.0081	-4.92	0.00	-0.01	-0.01	-4.94
48.23	0.0078	-4.73	0.00	-0.01	-0.01	-4.75
48.24	0.0075	-4.54	0.00	-0.01	-0.01	-4.56
48.25	0.0072	-4.35	0.00	-0.01	-0.01	-4.36
48.26	0.0069	-4.16	0.00	-0.01	-0.01	-4.18
48.27	0.0066	-3.97	0.00	-0.01	-0.01	-3.98
48.28	0.0063	-3.78	0.00	-0.01	-0.01	-3.79
48.29	0.0059	-3.59	0.00	-0.01	-0.01	-3.60
48.30	0.0056	-3.40	0.00	-0.01	-0.01	-3.41
48.31	0.0053	-3.21	0.00	-0.01	0.00	-3.22
48.32	0.0050	-3.02	0.00	-0.01	0.00	-3.03
48.33	0.0047	-2.83	0.00	0.00	0.00	-2.84
48.34	0.0044	-2.64	0.00	0.00	0.00	-2.65
48.35	0.0041	-2.45	0.00	0.00	0.00	-2.46
48.36	0.0038	-2.26	0.00	0.00	0.00	-2.27
48.37	0.0034	-2.07	0.00	0.00	0.00	-2.08
48.38	0.0031	-1.88	0.00	0.00	0.00	-1.89
48.39	0.0028	-1.69	0.00	0.00	0.00	-1.70
48.40	0.0025	-1.51	0.00	0.00	0.00	-1.51
48.41	0.0021	-1.21	0.00	0.00	0.00	-1.21
48.42	0.0017	-0.81	0.00	0.00	0.00	-0.82
48.43	0.0012	-0.62	0.18	0.00	0.00	-0.43
48.44	0.0009	-0.57	0.36	0.00	0.00	-0.20
48.45	0.0007	-0.45	0.33	0.00	0.00	-0.12
48.46	0.0005	-0.32	0.24	0.00	0.00	-0.08
48.47	0.0003	-0.18	0.14	0.00	0.00	-0.05
48.48	0.0001	-0.06	0.05	0.00	0.00	-0.01
48.49	-0.0001	-0.08	0.10	0.00	0.00	0.02
48.50	-0.0003	-0.19	0.24	0.00	0.00	0.05
48.51	-0.0005	-0.30	0.38	0.00	0.00	0.08
48.52	-0.0007	-0.42	0.53	0.00	0.00	0.11
48.53	-0.0010	-0.40	0.62	0.00	0.00	0.22
48.54	-0.0013	-0.11	0.63	0.00	0.00	0.52
48.55	-0.0018	0.00	0.91	0.00	0.00	0.91
48.56	-0.0022	0.00	1.27	0.00	0.00	1.27
48.57	-0.0026	0.00	1.50	0.00	0.00	1.50
48.58	-0.0029	0.00	1.69	0.00	0.00	1.69
48.59	-0.0032	0.00	1.89	0.00	0.00	1.88
48.60	-0.0035	0.00	2.08	0.00	0.00	2.07
48.61	-0.0038	0.00	2.27	0.00	0.00	2.26
48.62	-0.0041	0.00	2.46	0.00	0.00	2.45
48.63	-0.0045	0.00	2.65	0.00	0.00	2.64
48.64	-0.0048	0.00	2.84	0.00	0.00	2.83
48.65	-0.0051	0.00	3.02	0.00	-0.01	3.02
48.66	-0.0054	0.00	3.22	0.00	-0.01	3.20
48.67	-0.0057	0.00	3.40	-0.01	-0.01	3.39
48.68	-0.0060	0.00	3.59	-0.01	-0.01	3.58
48.69	-0.0063	0.00	3.78	-0.01	-0.01	3.77
48.70	-0.0066	0.00	3.97	-0.01	-0.01	3.96
48.71	-0.0069	0.00	4.16	-0.01	-0.01	4.15
48.72	-0.0073	0.00	4.35	-0.01	-0.01	4.34
48.73	-0.0076	0.00	4.54	-0.01	-0.01	4.53
48.74	-0.0079	0.00	4.73	-0.01	-0.01	4.72
48.75	-0.0082	0.00	4.92	-0.01	-0.01	4.91
48.76	-0.0085	0.00	5.11	-0.01	-0.01	5.09

48.77	-0.0088	0.00	5.30	-0.01	-0.01	5.28
48.78	-0.0091	0.00	5.49	-0.01	-0.01	5.47
48.79	-0.0094	0.00	5.68	-0.01	-0.01	5.66
48.80	-0.0098	0.00	5.87	-0.01	-0.01	5.85
48.81	-0.0101	0.00	6.06	-0.01	-0.01	6.04
48.82	-0.0104	0.00	6.25	-0.01	-0.01	6.23
48.83	-0.0107	0.00	6.44	-0.01	-0.01	6.42
48.84	-0.0110	0.00	6.63	-0.01	-0.01	6.61
48.85	-0.0113	0.00	6.82	-0.01	-0.01	6.80
48.86	-0.0116	0.00	7.01	-0.01	-0.01	6.99
48.87	-0.0119	0.00	7.20	-0.01	-0.01	7.17
48.88	-0.0123	0.00	7.39	-0.01	-0.01	7.36
48.89	-0.0126	0.00	7.58	-0.01	-0.01	7.55
48.90	-0.0129	0.00	7.77	-0.01	-0.01	7.74
48.91	-0.0132	0.00	7.96	-0.01	-0.01	7.93
48.92	-0.0135	0.00	8.15	-0.01	-0.01	8.12
48.93	-0.0138	0.00	8.34	-0.01	-0.02	8.31
48.94	-0.0141	0.00	8.53	-0.01	-0.02	8.50
48.95	-0.0144	0.00	8.72	-0.01	-0.02	8.69
48.96	-0.0147	0.00	8.91	-0.01	-0.02	8.88
48.97	-0.0152	0.00	9.34	-0.02	-0.02	9.30
48.98	-0.0163	0.00	10.62	-0.02	-0.02	10.58
48.99	-0.0180	0.00	12.76	-0.02	-0.02	12.72
49.00	-0.0200	0.00	15.21	-0.03	-0.02	15.15
49.01	-0.0200	0.00	15.28	-0.03	-0.02	15.23
49.02	-0.0193	0.00	14.82	-0.03	-0.02	14.77
49.03	-0.0190	0.00	14.67	-0.03	-0.02	14.62
49.04	-0.0188	0.00	14.50	-0.03	-0.02	14.45
49.05	-0.0184	0.00	14.27	-0.03	-0.02	14.22
49.06	-0.0181	0.00	14.07	-0.03	-0.02	14.01
49.07	-0.0177	-0.01	13.90	-0.03	-0.02	13.83
49.08	-0.0174	-0.06	13.74	-0.03	-0.02	13.63
49.09	-0.0171	-0.11	13.60	-0.03	-0.02	13.44
49.10	-0.0168	-0.15	13.45	-0.03	-0.02	13.25
49.11	-0.0164	-0.21	13.32	-0.03	-0.02	13.05
49.12	-0.0161	-0.28	13.19	-0.03	-0.02	12.86
49.13	-0.0158	-0.34	13.05	-0.03	-0.02	12.66
49.14	-0.0155	-0.41	12.92	-0.03	-0.02	12.47
49.15	-0.0152	-0.47	12.79	-0.03	-0.02	12.27
49.16	-0.0148	-0.53	12.66	-0.03	-0.02	12.08
49.17	-0.0145	-0.60	12.53	-0.03	-0.02	11.88
49.18	-0.0142	-0.66	12.39	-0.03	-0.02	11.69
49.19	-0.0139	-0.73	12.26	-0.02	-0.02	11.49
49.20	-0.0135	-0.79	12.13	-0.02	-0.02	11.30
49.21	-0.0132	-0.86	12.00	-0.02	-0.02	11.10
49.22	-0.0129	-0.92	11.87	-0.02	-0.02	10.91
49.23	-0.0126	-0.99	11.73	-0.02	-0.02	10.71
49.24	-0.0122	-1.05	11.60	-0.02	-0.02	10.51
49.25	-0.0119	-1.11	11.47	-0.02	-0.02	10.32
49.26	-0.0116	-1.18	11.34	-0.02	-0.01	10.12
49.27	-0.0113	-1.24	11.21	-0.02	-0.01	9.93
49.28	-0.0110	-1.31	11.08	-0.02	-0.01	9.73
49.29	-0.0106	-1.37	10.94	-0.02	-0.01	9.54
49.30	-0.0103	-1.44	10.81	-0.02	-0.01	9.34
49.31	-0.0100	-1.50	10.68	-0.02	-0.01	9.15
49.32	-0.0097	-1.57	10.55	-0.02	-0.01	8.95
49.33	-0.0093	-1.63	10.42	-0.02	-0.01	8.75

49.34	-0.0090	-1.69	10.28	-0.02	-0.01	8.56
49.35	-0.0087	-1.76	10.15	-0.02	-0.01	8.36
49.36	-0.0084	-1.82	10.02	-0.02	-0.01	8.17
49.37	-0.0081	-1.89	9.89	-0.02	-0.01	7.97
49.38	-0.0077	-1.95	9.76	-0.02	-0.01	7.78
49.39	-0.0074	-2.02	9.63	-0.02	-0.01	7.58
49.40	-0.0070	-2.03	9.35	-0.02	-0.01	7.30
49.41	-0.0066	-1.99	8.90	-0.02	-0.01	6.89
49.42	-0.0061	-1.93	8.40	-0.02	-0.01	6.44
49.43	-0.0056	-1.87	7.89	-0.01	-0.01	6.00
49.44	-0.0051	-1.81	7.39	-0.01	-0.01	5.56
49.45	-0.0046	-1.75	6.89	-0.01	-0.01	5.11
49.46	-0.0041	-1.69	6.38	-0.01	-0.01	4.67
49.47	-0.0036	-1.63	5.88	-0.01	0.00	4.23
49.48	-0.0031	-1.57	5.37	-0.01	0.00	3.78
49.49	-0.0025	-1.39	4.52	-0.01	0.00	3.12
49.50	-0.0013	-0.78	2.45	0.00	0.00	1.66
49.51	0.0001	-0.41	0.61	0.00	0.00	0.20
49.52	0.0003	-0.34	0.41	0.00	0.00	0.07
49.53	0.0005	-0.51	0.54	0.00	0.00	0.03
49.54	0.0007	-0.66	0.66	0.00	0.00	0.00
49.55	0.0009	-0.75	0.64	0.00	0.00	-0.11
49.56	0.0014	-0.73	0.28	0.00	0.00	-0.46
49.57	0.0019	-0.90	0.00	0.00	0.00	-0.91
49.58	0.0023	-1.27	0.00	0.00	0.00	-1.27
49.59	0.0027	-1.51	0.00	0.00	0.00	-1.51
49.60	0.0030	-1.71	0.00	0.00	0.00	-1.72
49.61	0.0033	-1.92	0.00	0.00	0.00	-1.92
49.62	0.0036	-2.12	0.00	0.00	0.00	-2.12
49.63	0.0040	-2.32	0.00	0.00	0.00	-2.32
49.64	0.0043	-2.52	0.00	0.00	0.00	-2.53
49.65	0.0046	-2.72	0.00	-0.01	0.00	-2.73
49.66	0.0049	-2.92	0.00	-0.01	0.00	-2.93
49.67	0.0053	-3.12	0.00	-0.01	0.00	-3.13
49.68	0.0056	-3.32	0.00	-0.01	-0.01	-3.33
49.69	0.0059	-3.52	0.00	-0.01	-0.01	-3.53
49.70	0.0063	-3.72	0.00	-0.01	-0.01	-3.73
49.71	0.0066	-3.92	0.00	-0.01	-0.01	-3.93
49.72	0.0069	-4.12	0.00	-0.01	-0.01	-4.13
49.73	0.0072	-4.32	0.00	-0.01	-0.01	-4.33
49.74	0.0076	-4.52	0.00	-0.01	-0.01	-4.53
49.75	0.0079	-4.72	0.00	-0.01	-0.01	-4.73
49.76	0.0082	-4.92	0.00	-0.01	-0.01	-4.93
49.77	0.0085	-5.12	0.00	-0.01	-0.01	-5.13
49.78	0.0089	-5.31	0.00	-0.01	-0.01	-5.33
49.79	0.0092	-5.52	0.00	-0.01	-0.01	-5.54
49.80	0.0095	-5.71	0.00	-0.01	-0.01	-5.73
49.81	0.0098	-5.91	0.00	-0.01	-0.01	-5.94
49.82	0.0102	-6.12	0.00	-0.01	-0.01	-6.14
49.83	0.0105	-6.32	0.00	-0.01	-0.01	-6.34
49.84	0.0108	-6.51	0.00	-0.01	-0.01	-6.54
49.85	0.0111	-6.72	0.00	-0.01	-0.01	-6.74
49.86	0.0115	-6.92	0.00	-0.01	-0.01	-6.94
49.87	0.0118	-7.11	0.00	-0.01	-0.01	-7.14
49.88	0.0121	-7.31	0.00	-0.01	-0.01	-7.34
49.89	0.0124	-7.51	0.00	-0.01	-0.01	-7.54
49.90	0.0128	-7.71	0.00	-0.01	-0.01	-7.74

49.91	0.0131	-7.91	0.00	-0.01	-0.01	-7.94
49.92	0.0134	-8.11	0.00	-0.01	-0.01	-8.14
49.93	0.0137	-8.31	0.00	-0.02	-0.01	-8.34
49.94	0.0141	-8.52	0.00	-0.02	-0.01	-8.54
49.95	0.0144	-8.71	0.00	-0.02	-0.01	-8.74
49.96	0.0147	-8.91	0.00	-0.02	-0.01	-8.94
49.97	0.0151	-9.19	0.00	-0.02	-0.02	-9.22
49.98	0.0160	-10.33	0.00	-0.02	-0.02	-10.37
49.99	0.0178	-12.53	0.00	-0.02	-0.02	-12.58
50.00	0.0199	-15.17	0.00	-0.02	-0.03	-15.23
50.01	0.0201	-15.38	0.00	-0.02	-0.03	-15.43
50.02	0.0193	-14.91	0.00	-0.02	-0.03	-14.96
50.03	0.0191	-14.75	0.00	-0.02	-0.03	-14.80
50.04	0.0188	-14.59	0.00	-0.02	-0.03	-14.64
50.05	0.0184	-14.34	0.00	-0.02	-0.03	-14.40
50.06	0.0181	-14.16	0.01	-0.02	-0.03	-14.20
50.07	0.0178	-14.00	0.04	-0.02	-0.03	-14.01
50.08	0.0175	-13.85	0.09	-0.02	-0.03	-13.81
50.09	0.0171	-13.70	0.13	-0.02	-0.03	-13.62
50.10	0.0168	-13.55	0.18	-0.02	-0.03	-13.42
50.11	0.0165	-13.42	0.24	-0.02	-0.03	-13.22
50.12	0.0162	-13.28	0.31	-0.02	-0.03	-13.02
50.13	0.0158	-13.14	0.37	-0.02	-0.03	-12.82
50.14	0.0155	-13.00	0.43	-0.02	-0.03	-12.62
50.15	0.0152	-12.87	0.49	-0.02	-0.03	-12.42
50.16	0.0149	-12.73	0.56	-0.02	-0.03	-12.22
50.17	0.0145	-12.59	0.62	-0.02	-0.03	-12.02
50.18	0.0142	-12.45	0.68	-0.02	-0.03	-11.82
50.19	0.0139	-12.32	0.74	-0.02	-0.03	-11.62
50.20	0.0136	-12.18	0.81	-0.02	-0.02	-11.42
50.21	0.0132	-12.04	0.87	-0.02	-0.02	-11.22
50.22	0.0129	-11.91	0.93	-0.02	-0.02	-11.02
50.23	0.0126	-11.77	0.99	-0.02	-0.02	-10.82
50.24	0.0123	-11.63	1.06	-0.02	-0.02	-10.62
50.25	0.0119	-11.50	1.12	-0.02	-0.02	-10.42
50.26	0.0116	-11.36	1.18	-0.02	-0.02	-10.22
50.27	0.0113	-11.22	1.24	-0.01	-0.02	-10.02
50.28	0.0110	-11.08	1.31	-0.01	-0.02	-9.81
50.29	0.0106	-10.95	1.37	-0.01	-0.02	-9.61
50.30	0.0103	-10.81	1.43	-0.01	-0.02	-9.41
50.31	0.0100	-10.67	1.49	-0.01	-0.02	-9.21
50.32	0.0097	-10.53	1.56	-0.01	-0.02	-9.01
50.33	0.0093	-10.40	1.62	-0.01	-0.02	-8.81
50.34	0.0090	-10.26	1.68	-0.01	-0.02	-8.61
50.35	0.0087	-10.12	1.74	-0.01	-0.02	-8.41
50.36	0.0084	-9.99	1.80	-0.01	-0.02	-8.21
50.37	0.0080	-9.85	1.87	-0.01	-0.02	-8.01
50.38	0.0077	-9.71	1.93	-0.01	-0.02	-7.81
50.39	0.0074	-9.57	1.99	-0.01	-0.02	-7.61
50.40	0.0070	-9.22	1.98	-0.01	-0.02	-7.27
50.41	0.0065	-8.73	1.92	-0.01	-0.02	-6.83
50.42	0.0060	-8.21	1.86	-0.01	-0.02	-6.37
50.43	0.0055	-7.70	1.80	-0.01	-0.01	-5.92
50.44	0.0050	-7.18	1.74	-0.01	-0.01	-5.47
50.45	0.0045	-6.66	1.67	-0.01	-0.01	-5.01
50.46	0.0040	-6.15	1.61	-0.01	-0.01	-4.56
50.47	0.0035	-5.63	1.54	-0.01	-0.01	-4.10

50.48	0.0030	-5.11	1.48	0.00	-0.01	-3.65
50.49	0.0021	-3.74	1.10	0.00	-0.01	-2.65
50.50	0.0006	-0.96	0.28	0.00	0.00	-0.69
50.51	-0.0015	-0.78	2.61	-0.01	0.00	1.82
50.52	-0.0028	-1.30	4.68	-0.01	0.00	3.37
50.53	-0.0034	-1.45	5.39	-0.01	0.00	3.92
50.54	-0.0038	-1.55	5.90	-0.01	-0.01	4.33
50.55	-0.0043	-1.62	6.46	-0.01	-0.01	4.82
50.56	-0.0048	-1.69	6.99	-0.01	-0.01	5.29
50.57	-0.0053	-1.75	7.50	-0.01	-0.01	5.72
50.58	-0.0058	-1.82	8.02	-0.02	-0.01	6.18
50.59	-0.0063	-1.88	8.54	-0.02	-0.01	6.63
50.60	-0.0068	-1.95	9.05	-0.02	-0.01	7.08
50.61	-0.0073	-1.94	9.37	-0.02	-0.01	7.41
50.62	-0.0076	-1.89	9.55	-0.02	-0.01	7.63
50.63	-0.0079	-1.84	9.70	-0.02	-0.01	7.83
50.64	-0.0082	-1.77	9.84	-0.02	-0.01	8.04
50.65	-0.0086	-1.71	9.98	-0.02	-0.01	8.23
50.66	-0.0089	-1.65	10.11	-0.02	-0.01	8.43
50.67	-0.0092	-1.59	10.25	-0.02	-0.01	8.63
50.68	-0.0095	-1.52	10.39	-0.02	-0.01	8.83
50.69	-0.0099	-1.46	10.53	-0.02	-0.01	9.03
50.70	-0.0102	-1.40	10.66	-0.02	-0.01	9.23
50.71	-0.0105	-1.34	10.80	-0.02	-0.01	9.43
50.72	-0.0108	-1.27	10.94	-0.02	-0.01	9.63
50.73	-0.0112	-1.21	11.07	-0.02	-0.01	9.82
50.74	-0.0115	-1.15	11.21	-0.02	-0.01	10.02
50.75	-0.0118	-1.09	11.35	-0.02	-0.02	10.22
50.76	-0.0121	-1.02	11.49	-0.02	-0.02	10.42
50.77	-0.0125	-0.96	11.62	-0.02	-0.02	10.62
50.78	-0.0128	-0.90	11.76	-0.02	-0.02	10.82
50.79	-0.0131	-0.84	11.90	-0.02	-0.02	11.02
50.80	-0.0134	-0.78	12.03	-0.02	-0.02	11.22
50.81	-0.0138	-0.71	12.17	-0.02	-0.02	11.42
50.82	-0.0141	-0.65	12.31	-0.03	-0.02	11.62
50.83	-0.0144	-0.59	12.45	-0.03	-0.02	11.81
50.84	-0.0148	-0.53	12.58	-0.03	-0.02	12.01
50.85	-0.0151	-0.46	12.72	-0.03	-0.02	12.21
50.86	-0.0154	-0.40	12.86	-0.03	-0.02	12.41
50.87	-0.0157	-0.34	12.99	-0.03	-0.02	12.61
50.88	-0.0161	-0.28	13.13	-0.03	-0.02	12.81
50.89	-0.0164	-0.21	13.27	-0.03	-0.02	13.01
50.90	-0.0167	-0.16	13.40	-0.03	-0.02	13.20
50.91	-0.0170	-0.11	13.56	-0.03	-0.02	13.40
50.92	-0.0174	-0.07	13.71	-0.03	-0.02	13.59
50.93	-0.0177	-0.02	13.86	-0.03	-0.02	13.79
50.94	-0.0180	0.00	14.05	-0.03	-0.02	14.00
50.95	-0.0183	0.00	14.24	-0.03	-0.02	14.19
50.96	-0.0187	0.00	14.45	-0.03	-0.02	14.39
50.97	-0.0190	0.00	14.65	-0.03	-0.02	14.59
50.98	-0.0193	0.00	14.85	-0.03	-0.02	14.79
50.99	-0.0196	0.00	15.05	-0.03	-0.02	14.99
51.00	-0.0200	0.00	15.35	-0.03	-0.02	15.29
51.01	-0.0198	0.00	15.21	-0.03	-0.02	15.15
51.02	-0.0193	0.00	14.91	-0.03	-0.02	14.86
51.03	-0.0190	0.00	14.73	-0.03	-0.02	14.67
51.04	-0.0187	0.00	14.54	-0.03	-0.02	14.49

51.05	-0.0184	0.00	14.32	-0.03	-0.02	14.26
51.06	-0.0181	-0.01	14.13	-0.03	-0.02	14.07
51.07	-0.0177	-0.05	13.98	-0.03	-0.02	13.88
51.08	-0.0174	-0.09	13.83	-0.03	-0.02	13.68
51.09	-0.0171	-0.14	13.67	-0.03	-0.02	13.49
51.10	-0.0168	-0.19	13.53	-0.03	-0.02	13.29
51.11	-0.0164	-0.25	13.39	-0.03	-0.02	13.09
51.12	-0.0161	-0.32	13.26	-0.03	-0.02	12.89
51.13	-0.0158	-0.38	13.12	-0.03	-0.02	12.70
51.14	-0.0155	-0.44	12.98	-0.03	-0.02	12.50
51.15	-0.0151	-0.50	12.85	-0.03	-0.02	12.30
51.16	-0.0148	-0.56	12.71	-0.03	-0.02	12.10
51.17	-0.0145	-0.63	12.57	-0.03	-0.02	11.90
51.18	-0.0142	-0.69	12.44	-0.03	-0.02	11.70
51.19	-0.0138	-0.75	12.30	-0.03	-0.02	11.50
51.20	-0.0135	-0.81	12.16	-0.02	-0.02	11.31
51.21	-0.0132	-0.88	12.02	-0.02	-0.02	11.11
51.22	-0.0129	-0.94	11.89	-0.02	-0.02	10.91
51.23	-0.0125	-1.00	11.75	-0.02	-0.02	10.71
51.24	-0.0122	-1.06	11.61	-0.02	-0.02	10.51
51.25	-0.0119	-1.13	11.48	-0.02	-0.02	10.31
51.26	-0.0116	-1.19	11.34	-0.02	-0.02	10.11
51.27	-0.0112	-1.25	11.20	-0.02	-0.01	9.92
51.28	-0.0109	-1.31	11.07	-0.02	-0.01	9.72
51.29	-0.0106	-1.38	10.93	-0.02	-0.01	9.52
51.30	-0.0103	-1.44	10.79	-0.02	-0.01	9.32
51.31	-0.0099	-1.50	10.65	-0.02	-0.01	9.12
51.32	-0.0096	-1.56	10.52	-0.02	-0.01	8.92
51.33	-0.0093	-1.62	10.38	-0.02	-0.01	8.72
51.34	-0.0090	-1.69	10.24	-0.02	-0.01	8.53
51.35	-0.0086	-1.75	10.11	-0.02	-0.01	8.33
51.36	-0.0083	-1.81	9.97	-0.02	-0.01	8.13
51.37	-0.0080	-1.87	9.83	-0.02	-0.01	7.93
51.38	-0.0077	-1.94	9.70	-0.02	-0.01	7.73
51.39	-0.0073	-2.00	9.56	-0.02	-0.01	7.53
51.40	-0.0069	-1.97	9.18	-0.02	-0.01	7.18
51.41	-0.0064	-1.92	8.67	-0.02	-0.01	6.73
51.42	-0.0059	-1.86	8.16	-0.02	-0.01	6.28
51.43	-0.0054	-1.79	7.65	-0.01	-0.01	5.83
51.44	-0.0049	-1.73	7.13	-0.01	-0.01	5.38
51.45	-0.0044	-1.67	6.62	-0.01	-0.01	4.93
51.46	-0.0039	-1.60	6.10	-0.01	-0.01	4.48
51.47	-0.0034	-1.54	5.58	-0.01	-0.01	4.03
51.48	-0.0029	-1.47	5.06	-0.01	0.00	3.58
51.49	-0.0020	-1.06	3.59	-0.01	0.00	2.52
51.50	-0.0004	-0.18	0.65	0.00	0.00	0.47
51.51	0.0017	-3.11	0.93	0.00	-0.01	-2.19
51.52	0.0032	-5.27	1.45	0.00	-0.01	-3.84
51.53	0.0035	-5.66	1.53	-0.01	-0.01	-4.15
51.54	0.0038	-6.03	1.60	-0.01	-0.01	-4.44
51.55	0.0044	-6.61	1.66	-0.01	-0.01	-4.97
51.56	0.0049	-7.15	1.73	-0.01	-0.01	-5.44
51.57	0.0054	-7.64	1.79	-0.01	-0.01	-5.87
51.58	0.0059	-8.16	1.86	-0.01	-0.02	-6.33
51.59	0.0064	-8.68	1.92	-0.01	-0.02	-6.79
51.60	0.0069	-9.20	1.99	-0.01	-0.02	-7.24
51.61	0.0073	-9.51	1.98	-0.01	-0.02	-7.56

51.62	0.0077	-9.68	1.93	-0.01	-0.02	-7.78
51.63	0.0080	-9.83	1.87	-0.01	-0.02	-7.99
51.64	0.0083	-9.97	1.81	-0.01	-0.02	-8.19
51.65	0.0086	-10.11	1.75	-0.01	-0.02	-8.39
51.66	0.0090	-10.24	1.69	-0.01	-0.02	-8.59
51.67	0.0093	-10.38	1.62	-0.01	-0.02	-8.79
51.68	0.0096	-10.52	1.56	-0.01	-0.02	-8.99
51.69	0.0099	-10.65	1.50	-0.01	-0.02	-9.19
51.70	0.0103	-10.79	1.44	-0.01	-0.02	-9.39
51.71	0.0106	-10.93	1.38	-0.01	-0.02	-9.59
51.72	0.0109	-11.07	1.31	-0.01	-0.02	-9.79
51.73	0.0112	-11.20	1.25	-0.01	-0.02	-9.99
51.74	0.0116	-11.34	1.19	-0.02	-0.02	-10.19
51.75	0.0119	-11.48	1.13	-0.02	-0.02	-10.39
51.76	0.0122	-11.61	1.06	-0.02	-0.02	-10.59
51.77	0.0125	-11.75	1.00	-0.02	-0.02	-10.79
51.78	0.0129	-11.89	0.94	-0.02	-0.02	-10.99
51.79	0.0132	-12.03	0.88	-0.02	-0.02	-11.19
51.80	0.0135	-12.16	0.81	-0.02	-0.02	-11.39
51.81	0.0138	-12.30	0.75	-0.02	-0.03	-11.59
51.82	0.0142	-12.44	0.69	-0.02	-0.03	-11.79
51.83	0.0145	-12.57	0.63	-0.02	-0.03	-11.99
51.84	0.0148	-12.71	0.56	-0.02	-0.03	-12.19
51.85	0.0151	-12.85	0.50	-0.02	-0.03	-12.39
51.86	0.0155	-12.98	0.44	-0.02	-0.03	-12.59
51.87	0.0158	-13.12	0.38	-0.02	-0.03	-12.79
51.88	0.0161	-13.26	0.32	-0.02	-0.03	-12.99
51.89	0.0164	-13.39	0.25	-0.02	-0.03	-13.19
51.90	0.0168	-13.53	0.19	-0.02	-0.03	-13.39
51.91	0.0171	-13.67	0.14	-0.02	-0.03	-13.58
51.92	0.0174	-13.82	0.10	-0.02	-0.03	-13.78
51.93	0.0177	-13.97	0.05	-0.02	-0.03	-13.97
51.94	0.0181	-14.13	0.01	-0.02	-0.03	-14.17
51.95	0.0184	-14.33	0.00	-0.02	-0.03	-14.39
51.96	0.0187	-14.53	0.00	-0.02	-0.03	-14.58
51.97	0.0190	-14.73	0.00	-0.02	-0.03	-14.78
51.98	0.0194	-14.93	0.00	-0.02	-0.03	-14.98
51.99	0.0197	-15.13	0.00	-0.02	-0.03	-15.18
52.00	0.0201	-15.40	0.00	-0.02	-0.03	-15.45
52.01	0.0198	-15.24	0.00	-0.02	-0.03	-15.29
52.02	0.0193	-14.93	0.00	-0.02	-0.03	-14.99
52.03	0.0190	-14.73	0.00	-0.02	-0.03	-14.79
52.04	0.0187	-14.53	0.00	-0.02	-0.03	-14.58
52.05	0.0183	-14.31	0.00	-0.02	-0.03	-14.36
52.06	0.0180	-14.14	0.03	-0.02	-0.03	-14.15
52.07	0.0176	-13.98	0.08	-0.02	-0.03	-13.94
52.08	0.0173	-13.82	0.13	-0.02	-0.03	-13.73
52.09	0.0170	-13.66	0.19	-0.02	-0.03	-13.52
52.10	0.0166	-13.52	0.25	-0.02	-0.03	-13.31
52.11	0.0163	-13.37	0.32	-0.02	-0.03	-13.10
52.12	0.0159	-13.23	0.38	-0.02	-0.03	-12.89
52.13	0.0156	-13.08	0.45	-0.02	-0.03	-12.68
52.14	0.0152	-12.94	0.51	-0.02	-0.03	-12.47
52.15	0.0149	-12.79	0.58	-0.02	-0.03	-12.26
52.16	0.0145	-12.65	0.65	-0.02	-0.03	-12.04
52.17	0.0142	-12.50	0.71	-0.02	-0.03	-11.83
52.18	0.0139	-12.36	0.78	-0.02	-0.03	-11.62

52.19	0.0135	-12.21	0.84	-0.02	-0.02	-11.41
52.20	0.0132	-12.07	0.91	-0.02	-0.02	-11.20
52.21	0.0128	-11.92	0.98	-0.02	-0.02	-10.99
52.22	0.0125	-11.78	1.04	-0.02	-0.02	-10.77
52.23	0.0121	-11.63	1.11	-0.02	-0.02	-10.56
52.24	0.0118	-11.49	1.17	-0.02	-0.02	-10.35
52.25	0.0114	-11.34	1.24	-0.01	-0.02	-10.14
52.26	0.0111	-11.19	1.31	-0.01	-0.02	-9.93
52.27	0.0108	-11.05	1.37	-0.01	-0.02	-9.72
52.28	0.0104	-10.91	1.44	-0.01	-0.02	-9.50
52.29	0.0101	-10.76	1.50	-0.01	-0.02	-9.29
52.30	0.0097	-10.62	1.57	-0.01	-0.02	-9.08
52.31	0.0094	-10.47	1.64	-0.01	-0.02	-8.87
52.32	0.0090	-10.33	1.70	-0.01	-0.02	-8.66
52.33	0.0087	-10.18	1.77	-0.01	-0.02	-8.44
52.34	0.0084	-10.04	1.83	-0.01	-0.02	-8.23
52.35	0.0080	-9.89	1.90	-0.01	-0.02	-8.02
52.36	0.0077	-9.74	1.97	-0.01	-0.02	-7.81
52.37	0.0073	-9.56	2.02	-0.01	-0.02	-7.57
52.38	0.0068	-9.12	1.98	-0.01	-0.02	-7.17
52.39	0.0063	-8.58	1.92	-0.01	-0.02	-6.68
52.40	0.0058	-8.03	1.85	-0.01	-0.02	-6.20
52.41	0.0052	-7.49	1.79	-0.01	-0.01	-5.73
52.42	0.0047	-6.94	1.72	-0.01	-0.01	-5.25
52.43	0.0042	-6.39	1.65	-0.01	-0.01	-4.76
52.44	0.0037	-5.85	1.58	-0.01	-0.01	-4.28
52.45	0.0031	-5.30	1.51	0.00	-0.01	-3.80
52.46	0.0023	-4.08	1.20	0.00	-0.01	-2.89
52.47	0.0008	-1.44	0.42	0.00	0.00	-1.03
52.48	-0.0013	-0.70	2.34	-0.01	0.00	1.63
52.49	-0.0028	-1.30	4.69	-0.01	0.00	3.37
52.50	-0.0034	-1.49	5.51	-0.01	0.00	4.01
52.51	-0.0039	-1.59	6.05	-0.01	-0.01	4.44
52.52	-0.0045	-1.67	6.64	-0.01	-0.01	4.95
52.53	-0.0050	-1.74	7.21	-0.01	-0.01	5.45
52.54	-0.0055	-1.81	7.74	-0.01	-0.01	5.91
52.55	-0.0060	-1.87	8.29	-0.02	-0.01	6.39
52.56	-0.0066	-1.94	8.84	-0.02	-0.01	6.87
52.57	-0.0071	-2.00	9.35	-0.02	-0.01	7.33
52.58	-0.0075	-1.96	9.59	-0.02	-0.01	7.61
52.59	-0.0078	-1.90	9.75	-0.02	-0.01	7.82
52.60	-0.0082	-1.84	9.91	-0.02	-0.01	8.04
52.61	-0.0085	-1.77	10.05	-0.02	-0.01	8.25
52.62	-0.0089	-1.71	10.20	-0.02	-0.01	8.46
52.63	-0.0092	-1.64	10.34	-0.02	-0.01	8.67
52.64	-0.0095	-1.58	10.49	-0.02	-0.01	8.88
52.65	-0.0099	-1.51	10.63	-0.02	-0.01	9.09
52.66	-0.0102	-1.44	10.78	-0.02	-0.01	9.30
52.67	-0.0106	-1.38	10.92	-0.02	-0.01	9.51
52.68	-0.0109	-1.31	11.07	-0.02	-0.01	9.72
52.69	-0.0113	-1.25	11.21	-0.02	-0.01	9.93
52.70	-0.0116	-1.18	11.36	-0.02	-0.02	10.14
52.71	-0.0120	-1.11	11.50	-0.02	-0.02	10.35
52.72	-0.0123	-1.05	11.65	-0.02	-0.02	10.56
52.73	-0.0126	-0.98	11.79	-0.02	-0.02	10.77
52.74	-0.0130	-0.92	11.94	-0.02	-0.02	10.98
52.75	-0.0133	-0.85	12.08	-0.02	-0.02	11.19

52.76	-0.0137	-0.78	12.23	-0.02	-0.02	11.40
52.77	-0.0140	-0.72	12.37	-0.03	-0.02	11.61
52.78	-0.0144	-0.65	12.52	-0.03	-0.02	11.82
52.79	-0.0147	-0.59	12.66	-0.03	-0.02	12.03
52.80	-0.0151	-0.52	12.81	-0.03	-0.02	12.24
52.81	-0.0154	-0.45	12.95	-0.03	-0.02	12.45
52.82	-0.0157	-0.39	13.10	-0.03	-0.02	12.66
52.83	-0.0161	-0.32	13.24	-0.03	-0.02	12.87
52.84	-0.0164	-0.26	13.39	-0.03	-0.02	13.09
52.85	-0.0168	-0.19	13.53	-0.03	-0.02	13.30
52.86	-0.0171	-0.14	13.68	-0.03	-0.02	13.50
52.87	-0.0175	-0.09	13.84	-0.03	-0.02	13.70
52.88	-0.0178	-0.04	14.00	-0.03	-0.02	13.91
52.89	-0.0181	0.00	14.18	-0.03	-0.02	14.13
52.90	-0.0185	0.00	14.39	-0.03	-0.02	14.33
52.91	-0.0188	0.00	14.60	-0.03	-0.02	14.55
52.92	-0.0192	0.00	14.82	-0.03	-0.02	14.76
52.93	-0.0195	0.00	15.03	-0.03	-0.02	14.97
52.94	-0.0199	0.00	15.24	-0.03	-0.02	15.18
52.95	-0.0206	0.00	16.03	-0.03	-0.02	15.97
52.96	-0.0221	-0.67	18.59	-0.04	-0.03	17.85
52.97	-0.0242	-1.76	22.31	-0.05	-0.03	20.47
52.98	-0.0263	-2.88	26.09	-0.05	-0.03	23.13
52.99	-0.0282	-3.88	29.45	-0.06	-0.04	25.47
53.00	-0.0300	-4.81	32.56	-0.06	-0.04	27.64
53.01	-0.0299	-4.77	32.48	-0.06	-0.04	27.61
53.02	-0.0291	-4.98	32.22	-0.06	-0.04	27.13
53.03	-0.0288	-5.04	32.11	-0.06	-0.04	26.96
53.04	-0.0286	-5.07	31.94	-0.06	-0.04	26.77
53.05	-0.0281	-5.17	31.79	-0.06	-0.04	26.52
53.06	-0.0278	-5.23	31.63	-0.06	-0.04	26.30
53.07	-0.0274	-5.30	31.49	-0.06	-0.04	26.09
53.08	-0.0271	-5.37	31.33	-0.06	-0.04	25.86
53.09	-0.0267	-5.44	31.18	-0.06	-0.04	25.64
53.10	-0.0263	-5.51	31.03	-0.06	-0.03	25.42
53.11	-0.0260	-5.58	30.87	-0.06	-0.03	25.20
53.12	-0.0256	-5.65	30.72	-0.06	-0.03	24.97
53.13	-0.0252	-5.72	30.57	-0.06	-0.03	24.75
53.14	-0.0249	-5.79	30.41	-0.06	-0.03	24.53
53.15	-0.0245	-5.86	30.26	-0.06	-0.03	24.31
53.16	-0.0242	-5.93	30.11	-0.06	-0.03	24.09
53.17	-0.0238	-6.00	29.95	-0.06	-0.03	23.86
53.18	-0.0234	-6.07	29.80	-0.06	-0.03	23.64
53.19	-0.0231	-6.14	29.65	-0.06	-0.03	23.42
53.20	-0.0227	-6.21	29.49	-0.06	-0.03	23.20
53.21	-0.0223	-6.28	29.34	-0.06	-0.03	22.98
53.22	-0.0220	-6.35	29.19	-0.06	-0.03	22.75
53.23	-0.0216	-6.42	29.04	-0.06	-0.03	22.53
53.24	-0.0212	-6.49	28.88	-0.06	-0.03	22.31
53.25	-0.0209	-6.56	28.73	-0.05	-0.03	22.09
53.26	-0.0205	-6.63	28.58	-0.05	-0.03	21.87
53.27	-0.0202	-6.70	28.42	-0.05	-0.03	21.64
53.28	-0.0198	-6.77	28.27	-0.05	-0.03	21.42
53.29	-0.0194	-6.84	28.12	-0.05	-0.03	21.20
53.30	-0.0191	-6.91	27.96	-0.05	-0.03	20.98
53.31	-0.0187	-6.98	27.81	-0.05	-0.03	20.76
53.32	-0.0183	-7.05	27.66	-0.05	-0.03	20.53

53.33	-0.0180	-7.11	27.50	-0.05	-0.03	20.31
53.34	-0.0176	-7.18	27.35	-0.05	-0.03	20.09
53.35	-0.0173	-7.25	27.20	-0.05	-0.03	19.87
53.36	-0.0168	-7.26	26.86	-0.05	-0.02	19.53
53.37	-0.0163	-7.20	26.33	-0.05	-0.02	19.05
53.38	-0.0157	-7.14	25.75	-0.05	-0.02	18.54
53.39	-0.0152	-7.07	25.18	-0.05	-0.02	18.04
53.40	-0.0146	-6.99	24.60	-0.05	-0.02	17.54
53.41	-0.0140	-6.92	24.02	-0.04	-0.02	17.04
53.42	-0.0135	-6.85	23.44	-0.04	-0.02	16.53
53.43	-0.0129	-6.77	22.85	-0.04	-0.02	16.02
53.44	-0.0121	-6.46	21.62	-0.04	-0.02	15.10
53.45	-0.0106	-5.66	18.90	-0.03	-0.02	13.19
53.46	-0.0084	-4.49	14.98	-0.03	-0.01	10.45
53.47	-0.0060	-3.24	10.79	-0.02	-0.01	7.52
53.48	-0.0039	-2.10	6.99	-0.01	-0.01	4.87
53.49	-0.0020	-1.06	3.52	-0.01	0.00	2.45
53.50	0.0000	0.00	0.00	0.00	0.00	0.00
53.51	0.0019	-3.45	1.03	0.00	-0.01	-2.43
53.52	0.0032	-5.16	1.42	0.00	-0.01	-3.76
53.53	0.0036	-5.78	1.55	-0.01	-0.01	-4.25
53.54	0.0041	-6.35	1.65	-0.01	-0.01	-4.72
53.55	0.0048	-6.98	1.72	-0.01	-0.01	-5.28
53.56	0.0053	-7.57	1.79	-0.01	-0.01	-5.79
53.57	0.0059	-8.13	1.87	-0.01	-0.02	-6.29
53.58	0.0064	-8.71	1.94	-0.01	-0.02	-6.80
53.59	0.0070	-9.29	2.01	-0.01	-0.02	-7.31
53.60	0.0074	-9.60	1.99	-0.01	-0.02	-7.65
53.61	0.0078	-9.79	1.93	-0.01	-0.02	-7.89
53.62	0.0082	-9.95	1.87	-0.01	-0.02	-8.11
53.63	0.0085	-10.11	1.80	-0.01	-0.02	-8.34
53.64	0.0089	-10.26	1.73	-0.01	-0.02	-8.57
53.65	0.0093	-10.42	1.66	-0.01	-0.02	-8.79
53.66	0.0096	-10.57	1.59	-0.01	-0.02	-9.01
53.67	0.0100	-10.72	1.52	-0.01	-0.02	-9.23
53.68	0.0103	-10.88	1.45	-0.01	-0.02	-9.46
53.69	0.0107	-11.03	1.38	-0.01	-0.02	-9.68
53.70	0.0111	-11.18	1.31	-0.01	-0.02	-9.91
53.71	0.0114	-11.33	1.24	-0.01	-0.02	-10.13
53.72	0.0118	-11.49	1.17	-0.02	-0.02	-10.35
53.73	0.0122	-11.64	1.10	-0.02	-0.02	-10.58
53.74	0.0125	-11.79	1.03	-0.02	-0.02	-10.80
53.75	0.0129	-11.95	0.96	-0.02	-0.02	-11.02
53.76	0.0132	-12.10	0.89	-0.02	-0.02	-11.25
53.77	0.0136	-12.25	0.82	-0.02	-0.02	-11.47
53.78	0.0140	-12.41	0.75	-0.02	-0.03	-11.69
53.79	0.0143	-12.56	0.68	-0.02	-0.03	-11.92
53.80	0.0147	-12.71	0.62	-0.02	-0.03	-12.14
53.81	0.0151	-12.87	0.55	-0.02	-0.03	-12.37
53.82	0.0154	-13.02	0.48	-0.02	-0.03	-12.59
53.83	0.0158	-13.17	0.41	-0.02	-0.03	-12.81
53.84	0.0162	-13.32	0.34	-0.02	-0.03	-13.04
53.85	0.0165	-13.48	0.27	-0.02	-0.03	-13.26
53.86	0.0169	-13.63	0.20	-0.02	-0.03	-13.48
53.87	0.0172	-13.79	0.14	-0.02	-0.03	-13.70
53.88	0.0176	-13.96	0.09	-0.02	-0.03	-13.92
53.89	0.0180	-14.13	0.04	-0.02	-0.03	-14.14

53.90	0.0183	-14.32	0.00	-0.02	-0.03	-14.37
53.91	0.0187	-14.53	0.00	-0.02	-0.03	-14.59
53.92	0.0191	-14.76	0.00	-0.02	-0.03	-14.82
53.93	0.0194	-14.99	0.00	-0.02	-0.03	-15.04
53.94	0.0198	-15.21	0.00	-0.02	-0.03	-15.27
53.95	0.0204	-15.78	0.00	-0.02	-0.03	-15.83
53.96	0.0217	-17.82	0.43	-0.03	-0.04	-17.46
53.97	0.0238	-21.52	1.53	-0.03	-0.04	-20.07
53.98	0.0261	-25.61	2.74	-0.03	-0.05	-22.96
53.99	0.0282	-29.32	3.84	-0.04	-0.06	-25.57
54.00	0.0300	-32.64	4.83	-0.04	-0.06	-27.91
54.01	0.0300	-32.56	4.79	-0.04	-0.06	-27.87
54.02	0.0292	-32.29	5.01	-0.04	-0.06	-27.39
54.03	0.0289	-32.19	5.07	-0.04	-0.06	-27.22
54.04	0.0286	-32.02	5.10	-0.04	-0.06	-27.02
54.05	0.0282	-31.87	5.20	-0.04	-0.06	-26.78
54.06	0.0278	-31.71	5.26	-0.04	-0.06	-26.55
54.07	0.0275	-31.57	5.33	-0.04	-0.06	-26.34
54.08	0.0271	-31.41	5.40	-0.04	-0.06	-26.11
54.09	0.0267	-31.26	5.47	-0.04	-0.06	-25.89
54.10	0.0264	-31.11	5.54	-0.03	-0.06	-25.66
54.11	0.0260	-30.95	5.61	-0.03	-0.06	-25.44
54.12	0.0256	-30.80	5.68	-0.03	-0.06	-25.22
54.13	0.0253	-30.65	5.75	-0.03	-0.06	-25.00
54.14	0.0249	-30.49	5.81	-0.03	-0.06	-24.77
54.15	0.0246	-30.34	5.88	-0.03	-0.06	-24.55
54.16	0.0242	-30.19	5.95	-0.03	-0.06	-24.33
54.17	0.0238	-30.04	6.02	-0.03	-0.06	-24.10
54.18	0.0235	-29.88	6.09	-0.03	-0.06	-23.88
54.19	0.0231	-29.73	6.16	-0.03	-0.06	-23.66
54.20	0.0228	-29.58	6.23	-0.03	-0.06	-23.43
54.21	0.0224	-29.42	6.30	-0.03	-0.06	-23.21
54.22	0.0220	-29.27	6.37	-0.03	-0.06	-22.99
54.23	0.0217	-29.12	6.44	-0.03	-0.06	-22.76
54.24	0.0213	-28.97	6.51	-0.03	-0.06	-22.54
54.25	0.0209	-28.81	6.58	-0.03	-0.06	-22.32
54.26	0.0206	-28.66	6.65	-0.03	-0.05	-22.09
54.27	0.0202	-28.51	6.72	-0.03	-0.05	-21.87
54.28	0.0199	-28.35	6.79	-0.03	-0.05	-21.65
54.29	0.0195	-28.20	6.86	-0.03	-0.05	-21.42
54.30	0.0191	-28.05	6.93	-0.03	-0.05	-21.20
54.31	0.0188	-27.90	7.00	-0.03	-0.05	-20.98
54.32	0.0184	-27.74	7.07	-0.03	-0.05	-20.75
54.33	0.0180	-27.59	7.14	-0.03	-0.05	-20.53
54.34	0.0177	-27.44	7.21	-0.03	-0.05	-20.31
54.35	0.0173	-27.28	7.28	-0.03	-0.05	-20.08
54.36	0.0169	-26.96	7.28	-0.02	-0.05	-19.75
54.37	0.0163	-26.43	7.23	-0.02	-0.05	-19.27
54.38	0.0158	-25.85	7.16	-0.02	-0.05	-18.76
54.39	0.0152	-25.28	7.09	-0.02	-0.05	-18.26
54.40	0.0147	-24.71	7.02	-0.02	-0.05	-17.75
54.41	0.0141	-24.13	6.95	-0.02	-0.05	-17.25
54.42	0.0136	-23.55	6.88	-0.02	-0.04	-16.74
54.43	0.0130	-22.96	6.80	-0.02	-0.04	-16.22
54.44	0.0122	-21.79	6.51	-0.02	-0.04	-15.34
54.45	0.0107	-19.15	5.73	-0.02	-0.04	-13.47
54.46	0.0085	-15.27	4.57	-0.01	-0.03	-10.74

54.47	0.0062	-11.08	3.33	-0.01	-0.02	-7.78
54.48	0.0040	-7.25	2.18	-0.01	-0.01	-5.09
54.49	0.0021	-3.78	1.14	0.00	-0.01	-2.66
54.50	0.0002	-0.26	0.08	0.00	0.00	-0.19
54.51	-0.0018	-0.95	3.18	-0.01	0.00	2.22
54.52	-0.0038	-2.07	6.89	-0.01	-0.01	4.80
54.53	-0.0059	-3.19	10.63	-0.02	-0.01	7.41
54.54	-0.0080	-4.29	14.29	-0.03	-0.01	9.96
54.55	-0.0100	-5.36	17.87	-0.03	-0.02	12.46
54.56	-0.0119	-6.38	21.28	-0.04	-0.02	14.85
54.57	-0.0130	-6.70	22.77	-0.04	-0.02	16.01
54.58	-0.0134	-6.82	23.35	-0.04	-0.02	16.47
54.59	-0.0139	-6.91	23.93	-0.04	-0.02	16.95
54.60	-0.0146	-6.98	24.55	-0.05	-0.02	17.50
54.61	-0.0151	-7.06	25.13	-0.05	-0.02	18.01
54.62	-0.0157	-7.13	25.70	-0.05	-0.02	18.50
54.63	-0.0162	-7.20	26.28	-0.05	-0.02	19.00
54.64	-0.0168	-7.27	26.86	-0.05	-0.02	19.51
54.65	-0.0172	-7.24	27.14	-0.05	-0.03	19.83
54.66	-0.0176	-7.19	27.32	-0.05	-0.03	20.06
54.67	-0.0179	-7.12	27.48	-0.05	-0.03	20.28
54.68	-0.0183	-7.05	27.64	-0.05	-0.03	20.51
54.69	-0.0187	-6.98	27.79	-0.05	-0.03	20.73
54.70	-0.0190	-6.91	27.95	-0.05	-0.03	20.95
54.71	-0.0194	-6.84	28.10	-0.05	-0.03	21.17
54.72	-0.0198	-6.77	28.25	-0.05	-0.03	21.40
54.73	-0.0201	-6.70	28.41	-0.05	-0.03	21.62
54.74	-0.0205	-6.63	28.56	-0.05	-0.03	21.84
54.75	-0.0208	-6.57	28.71	-0.05	-0.03	22.06
54.76	-0.0212	-6.50	28.86	-0.06	-0.03	22.28
54.77	-0.0216	-6.43	29.02	-0.06	-0.03	22.50
54.78	-0.0219	-6.36	29.17	-0.06	-0.03	22.73
54.79	-0.0223	-6.29	29.32	-0.06	-0.03	22.95
54.80	-0.0227	-6.22	29.48	-0.06	-0.03	23.17
54.81	-0.0230	-6.15	29.63	-0.06	-0.03	23.39
54.82	-0.0234	-6.08	29.78	-0.06	-0.03	23.61
54.83	-0.0237	-6.01	29.93	-0.06	-0.03	23.84
54.84	-0.0241	-5.94	30.09	-0.06	-0.03	24.06
54.85	-0.0245	-5.87	30.24	-0.06	-0.03	24.28
54.86	-0.0248	-5.80	30.39	-0.06	-0.03	24.50
54.87	-0.0252	-5.73	30.54	-0.06	-0.03	24.72
54.88	-0.0256	-5.66	30.70	-0.06	-0.03	24.94
54.89	-0.0259	-5.59	30.85	-0.06	-0.03	25.17
54.90	-0.0263	-5.52	31.00	-0.06	-0.03	25.39
54.91	-0.0266	-5.45	31.16	-0.06	-0.04	25.61
54.92	-0.0270	-5.38	31.31	-0.06	-0.04	25.83
54.93	-0.0274	-5.31	31.46	-0.06	-0.04	26.05
54.94	-0.0277	-5.24	31.61	-0.06	-0.04	26.27
54.95	-0.0281	-5.17	31.77	-0.06	-0.04	26.49
54.96	-0.0285	-5.10	31.92	-0.06	-0.04	26.72
54.97	-0.0288	-5.03	32.07	-0.06	-0.04	26.94
54.98	-0.0292	-4.96	32.23	-0.06	-0.04	27.16
54.99	-0.0295	-4.89	32.38	-0.06	-0.04	27.38
55.00	-0.0300	-4.91	32.77	-0.06	-0.04	27.75
55.01	-0.0298	-4.91	32.62	-0.06	-0.04	27.60
55.02	-0.0292	-5.05	32.42	-0.06	-0.04	27.27
55.03	-0.0289	-5.11	32.28	-0.06	-0.04	27.07

55.04	-0.0286	-5.16	32.12	-0.06	-0.04	26.86
55.05	-0.0282	-5.24	31.97	-0.06	-0.04	26.63
55.06	-0.0278	-5.31	31.82	-0.06	-0.04	26.41
55.07	-0.0275	-5.38	31.67	-0.06	-0.04	26.19
55.08	-0.0271	-5.45	31.51	-0.06	-0.04	25.97
55.09	-0.0267	-5.52	31.36	-0.06	-0.04	25.74
55.10	-0.0264	-5.59	31.21	-0.06	-0.03	25.52
55.11	-0.0260	-5.66	31.05	-0.06	-0.03	25.30
55.12	-0.0257	-5.73	30.90	-0.06	-0.03	25.08
55.13	-0.0253	-5.80	30.75	-0.06	-0.03	24.86
55.14	-0.0249	-5.87	30.60	-0.06	-0.03	24.64
55.15	-0.0246	-5.93	30.44	-0.06	-0.03	24.42
55.16	-0.0242	-6.00	30.29	-0.06	-0.03	24.20
55.17	-0.0238	-6.07	30.14	-0.06	-0.03	23.97
55.18	-0.0235	-6.14	29.99	-0.06	-0.03	23.75
55.19	-0.0231	-6.21	29.83	-0.06	-0.03	23.53
55.20	-0.0228	-6.28	29.68	-0.06	-0.03	23.31
55.21	-0.0224	-6.35	29.53	-0.06	-0.03	23.09
55.22	-0.0220	-6.42	29.38	-0.06	-0.03	22.87
55.23	-0.0217	-6.49	29.22	-0.06	-0.03	22.65
55.24	-0.0213	-6.56	29.07	-0.06	-0.03	22.42
55.25	-0.0210	-6.63	28.92	-0.06	-0.03	22.20
55.26	-0.0206	-6.70	28.77	-0.05	-0.03	21.98
55.27	-0.0202	-6.77	28.61	-0.05	-0.03	21.76
55.28	-0.0199	-6.84	28.46	-0.05	-0.03	21.54
55.29	-0.0195	-6.91	28.31	-0.05	-0.03	21.32
55.30	-0.0191	-6.98	28.16	-0.05	-0.03	21.10
55.31	-0.0188	-7.05	28.00	-0.05	-0.03	20.88
55.32	-0.0184	-7.12	27.85	-0.05	-0.03	20.65
55.33	-0.0181	-7.19	27.70	-0.05	-0.03	20.43
55.34	-0.0177	-7.26	27.54	-0.05	-0.03	20.21
55.35	-0.0173	-7.32	27.39	-0.05	-0.03	19.99
55.36	-0.0169	-7.32	27.02	-0.05	-0.02	19.63
55.37	-0.0163	-7.26	26.48	-0.05	-0.02	19.15
55.38	-0.0158	-7.19	25.91	-0.05	-0.02	18.64
55.39	-0.0152	-7.12	25.34	-0.05	-0.02	18.14
55.40	-0.0147	-7.05	24.76	-0.05	-0.02	17.64
55.41	-0.0141	-6.98	24.18	-0.05	-0.02	17.14
55.42	-0.0136	-6.90	23.60	-0.04	-0.02	16.63
55.43	-0.0130	-6.83	23.01	-0.04	-0.02	16.12
55.44	-0.0121	-6.48	21.68	-0.04	-0.02	15.14
55.45	-0.0105	-5.64	18.85	-0.03	-0.02	13.16
55.46	-0.0082	-4.42	14.76	-0.03	-0.01	10.29
55.47	-0.0059	-3.16	10.52	-0.02	-0.01	7.33
55.48	-0.0038	-2.07	6.89	-0.01	-0.01	4.80
55.49	-0.0020	-1.09	3.64	-0.01	0.00	2.54
55.50	-0.0001	-0.06	0.20	0.00	0.00	0.14
55.51	0.0019	-3.42	1.03	0.00	-0.01	-2.41
55.52	0.0041	-7.29	2.19	-0.01	-0.01	-5.12
55.53	0.0061	-10.99	3.30	-0.01	-0.02	-7.73
55.54	0.0081	-14.54	4.36	-0.01	-0.03	-10.22
55.55	0.0101	-18.05	5.42	-0.02	-0.03	-12.68
55.56	0.0120	-21.42	6.41	-0.02	-0.04	-15.06
55.57	0.0131	-22.88	6.73	-0.02	-0.04	-16.22
55.58	0.0135	-23.45	6.85	-0.02	-0.04	-16.67
55.59	0.0140	-24.03	6.94	-0.02	-0.04	-17.16
55.60	0.0146	-24.66	7.01	-0.02	-0.05	-17.71

55.61	0.0152	-25.24	7.09	-0.02	-0.05	-18.22
55.62	0.0157	-25.80	7.16	-0.02	-0.05	-18.71
55.63	0.0163	-26.38	7.23	-0.02	-0.05	-19.22
55.64	0.0168	-26.96	7.30	-0.02	-0.05	-19.73
55.65	0.0173	-27.23	7.26	-0.03	-0.05	-20.05
55.66	0.0176	-27.41	7.21	-0.03	-0.05	-20.28
55.67	0.0180	-27.57	7.15	-0.03	-0.05	-20.50
55.68	0.0184	-27.73	7.07	-0.03	-0.05	-20.73
55.69	0.0187	-27.88	7.01	-0.03	-0.05	-20.95
55.70	0.0191	-28.03	6.94	-0.03	-0.05	-21.18
55.71	0.0194	-28.18	6.87	-0.03	-0.05	-21.40
55.72	0.0198	-28.34	6.80	-0.03	-0.05	-21.62
55.73	0.0202	-28.49	6.73	-0.03	-0.05	-21.84
55.74	0.0205	-28.64	6.66	-0.03	-0.05	-22.07
55.75	0.0209	-28.79	6.59	-0.03	-0.06	-22.29
55.76	0.0213	-28.95	6.52	-0.03	-0.06	-22.51
55.77	0.0216	-29.10	6.45	-0.03	-0.06	-22.74
55.78	0.0220	-29.25	6.38	-0.03	-0.06	-22.96
55.79	0.0223	-29.41	6.31	-0.03	-0.06	-23.18
55.80	0.0227	-29.56	6.24	-0.03	-0.06	-23.40
55.81	0.0231	-29.71	6.17	-0.03	-0.06	-23.63
55.82	0.0234	-29.86	6.10	-0.03	-0.06	-23.85
55.83	0.0238	-30.02	6.03	-0.03	-0.06	-24.07
55.84	0.0242	-30.17	5.96	-0.03	-0.06	-24.30
55.85	0.0245	-30.32	5.89	-0.03	-0.06	-24.52
55.86	0.0249	-30.47	5.82	-0.03	-0.06	-24.74
55.87	0.0252	-30.63	5.75	-0.03	-0.06	-24.96
55.88	0.0256	-30.78	5.69	-0.03	-0.06	-25.19
55.89	0.0260	-30.93	5.62	-0.03	-0.06	-25.41
55.90	0.0263	-31.08	5.55	-0.03	-0.06	-25.63
55.91	0.0267	-31.24	5.48	-0.04	-0.06	-25.86
55.92	0.0270	-31.39	5.41	-0.04	-0.06	-26.08
55.93	0.0274	-31.54	5.34	-0.04	-0.06	-26.30
55.94	0.0278	-31.69	5.27	-0.04	-0.06	-26.53
55.95	0.0281	-31.85	5.20	-0.04	-0.06	-26.75
55.96	0.0285	-32.00	5.13	-0.04	-0.06	-26.97
55.97	0.0289	-32.15	5.06	-0.04	-0.06	-27.19
55.98	0.0292	-32.30	4.99	-0.04	-0.06	-27.42
55.99	0.0296	-32.46	4.92	-0.04	-0.06	-27.64
56.00	0.0300	-32.81	4.93	-0.04	-0.06	-27.99
56.01	0.0298	-32.65	4.93	-0.04	-0.06	-27.83
56.02	0.0292	-32.44	5.07	-0.04	-0.06	-27.48
56.03	0.0289	-32.29	5.14	-0.04	-0.06	-27.26
56.04	0.0285	-32.13	5.19	-0.04	-0.06	-27.04
56.05	0.0281	-31.97	5.28	-0.04	-0.06	-26.79
56.06	0.0277	-31.80	5.35	-0.04	-0.06	-26.55
56.07	0.0273	-31.64	5.42	-0.04	-0.06	-26.32
56.08	0.0269	-31.48	5.50	-0.04	-0.06	-26.08
56.09	0.0266	-31.32	5.57	-0.04	-0.06	-25.84
56.10	0.0262	-31.16	5.64	-0.03	-0.06	-25.61
56.11	0.0258	-30.99	5.72	-0.03	-0.06	-25.37
56.12	0.0254	-30.83	5.79	-0.03	-0.06	-25.14
56.13	0.0250	-30.67	5.86	-0.03	-0.06	-24.90
56.14	0.0246	-30.51	5.94	-0.03	-0.06	-24.66
56.15	0.0243	-30.35	6.01	-0.03	-0.06	-24.43
56.16	0.0239	-30.18	6.09	-0.03	-0.06	-24.19
56.17	0.0235	-30.02	6.16	-0.03	-0.06	-23.95

56.18	0.0231	-29.86	6.23	-0.03	-0.06	-23.72
56.19	0.0227	-29.70	6.31	-0.03	-0.06	-23.48
56.20	0.0223	-29.54	6.38	-0.03	-0.06	-23.24
56.21	0.0220	-29.37	6.45	-0.03	-0.06	-23.01
56.22	0.0216	-29.21	6.53	-0.03	-0.06	-22.77
56.23	0.0212	-29.05	6.60	-0.03	-0.06	-22.53
56.24	0.0208	-28.89	6.68	-0.03	-0.06	-22.30
56.25	0.0204	-28.73	6.75	-0.03	-0.05	-22.06
56.26	0.0200	-28.56	6.82	-0.03	-0.05	-21.82
56.27	0.0197	-28.40	6.90	-0.03	-0.05	-21.59
56.28	0.0193	-28.24	6.97	-0.03	-0.05	-21.35
56.29	0.0189	-28.08	7.04	-0.03	-0.05	-21.11
56.30	0.0185	-27.92	7.12	-0.03	-0.05	-20.88
56.31	0.0181	-27.76	7.19	-0.03	-0.05	-20.64
56.32	0.0177	-27.59	7.27	-0.03	-0.05	-20.41
56.33	0.0174	-27.43	7.34	-0.03	-0.05	-20.17
56.34	0.0169	-27.03	7.32	-0.02	-0.05	-19.78
56.35	0.0163	-26.44	7.26	-0.02	-0.05	-19.26
56.36	0.0157	-25.83	7.19	-0.02	-0.05	-18.71
56.37	0.0151	-25.23	7.11	-0.02	-0.05	-18.18
56.38	0.0145	-24.62	7.04	-0.02	-0.05	-17.65
56.39	0.0139	-24.01	6.96	-0.02	-0.04	-17.11
56.40	0.0133	-23.39	6.88	-0.02	-0.04	-16.57
56.41	0.0127	-22.64	6.76	-0.02	-0.04	-15.94
56.42	0.0114	-20.48	6.13	-0.02	-0.04	-14.41
56.43	0.0093	-16.65	4.98	-0.01	-0.03	-11.71
56.44	0.0068	-12.12	3.64	-0.01	-0.02	-8.52
56.45	0.0044	-7.88	2.37	-0.01	-0.01	-5.53
56.46	0.0023	-4.14	1.25	0.00	-0.01	-2.91
56.47	0.0003	-0.48	0.15	0.00	0.00	-0.34
56.48	-0.0017	-0.92	3.09	-0.01	0.00	2.15
56.49	-0.0039	-2.12	7.05	-0.01	-0.01	4.91
56.50	-0.0062	-3.31	11.05	-0.02	-0.01	7.70
56.51	-0.0083	-4.48	14.93	-0.03	-0.01	10.41
56.52	-0.0104	-5.61	18.69	-0.03	-0.02	13.03
56.53	-0.0122	-6.50	21.81	-0.04	-0.02	15.25
56.54	-0.0133	-6.84	23.31	-0.04	-0.02	16.41
56.55	-0.0138	-6.93	23.83	-0.04	-0.02	16.84
56.56	-0.0143	-7.01	24.38	-0.05	-0.02	17.31
56.57	-0.0149	-7.08	25.03	-0.05	-0.02	17.88
56.58	-0.0155	-7.16	25.65	-0.05	-0.02	18.42
56.59	-0.0161	-7.23	26.25	-0.05	-0.02	18.94
56.60	-0.0167	-7.31	26.86	-0.05	-0.02	19.47
56.61	-0.0172	-7.31	27.27	-0.05	-0.03	19.88
56.62	-0.0176	-7.26	27.49	-0.05	-0.03	20.15
56.63	-0.0180	-7.20	27.66	-0.05	-0.03	20.39
56.64	-0.0184	-7.12	27.83	-0.05	-0.03	20.63
56.65	-0.0188	-7.05	27.99	-0.05	-0.03	20.86
56.66	-0.0191	-6.98	28.16	-0.05	-0.03	21.10
56.67	-0.0195	-6.90	28.32	-0.05	-0.03	21.33
56.68	-0.0199	-6.83	28.48	-0.05	-0.03	21.57
56.69	-0.0203	-6.76	28.64	-0.05	-0.03	21.80
56.70	-0.0207	-6.68	28.80	-0.06	-0.03	22.04
56.71	-0.0211	-6.61	28.97	-0.06	-0.03	22.27
56.72	-0.0215	-6.53	29.13	-0.06	-0.03	22.51
56.73	-0.0218	-6.46	29.29	-0.06	-0.03	22.74
56.74	-0.0222	-6.39	29.45	-0.06	-0.03	22.98

56.75	-0.0226	-6.31	29.61	-0.06	-0.03	23.21
56.76	-0.0230	-6.24	29.77	-0.06	-0.03	23.45
56.77	-0.0234	-6.17	29.94	-0.06	-0.03	23.68
56.78	-0.0238	-6.09	30.10	-0.06	-0.03	23.92
56.79	-0.0241	-6.02	30.26	-0.06	-0.03	24.15
56.80	-0.0245	-5.94	30.42	-0.06	-0.03	24.39
56.81	-0.0249	-5.87	30.59	-0.06	-0.03	24.62
56.82	-0.0253	-5.80	30.75	-0.06	-0.03	24.86
56.83	-0.0257	-5.72	30.91	-0.06	-0.03	25.09
56.84	-0.0261	-5.65	31.07	-0.06	-0.03	25.33
56.85	-0.0264	-5.58	31.23	-0.06	-0.03	25.56
56.86	-0.0268	-5.50	31.39	-0.06	-0.04	25.80
56.87	-0.0272	-5.43	31.56	-0.06	-0.04	26.03
56.88	-0.0276	-5.35	31.72	-0.06	-0.04	26.27
56.89	-0.0280	-5.28	31.88	-0.06	-0.04	26.50
56.90	-0.0284	-5.21	32.04	-0.06	-0.04	26.73
56.91	-0.0287	-5.13	32.20	-0.06	-0.04	26.97
56.92	-0.0291	-5.06	32.37	-0.06	-0.04	27.20
56.93	-0.0295	-4.99	32.53	-0.06	-0.04	27.44
56.94	-0.0299	-4.91	32.69	-0.06	-0.04	27.67
56.95	-0.0308	-5.32	34.16	-0.07	-0.04	28.74
56.96	-0.0327	-6.27	37.39	-0.07	-0.04	31.00
56.97	-0.0348	-7.33	41.11	-0.08	-0.05	33.65
56.98	-0.0367	-8.27	44.34	-0.09	-0.05	35.94
56.99	-0.0383	-9.08	47.12	-0.09	-0.05	37.90
57.00	-0.0399	-9.89	49.92	-0.10	-0.05	39.87
57.01	-0.0399	-9.85	49.82	-0.10	-0.05	39.82
57.02	-0.0390	-10.07	49.54	-0.10	-0.05	39.33
57.03	-0.0387	-10.14	49.41	-0.10	-0.05	39.12
57.04	-0.0384	-10.18	49.23	-0.09	-0.05	38.90
57.05	-0.0379	-10.29	49.06	-0.09	-0.05	38.63
57.06	-0.0375	-10.36	48.89	-0.09	-0.05	38.39
57.07	-0.0371	-10.43	48.72	-0.09	-0.05	38.14
57.08	-0.0367	-10.51	48.55	-0.09	-0.05	37.89
57.09	-0.0363	-10.59	48.38	-0.09	-0.05	37.64
57.10	-0.0359	-10.67	48.21	-0.09	-0.05	37.40
57.11	-0.0355	-10.75	48.04	-0.09	-0.05	37.15
57.12	-0.0351	-10.82	47.86	-0.09	-0.05	36.90
57.13	-0.0347	-10.90	47.69	-0.09	-0.05	36.65
57.14	-0.0343	-10.98	47.52	-0.09	-0.05	36.40
57.15	-0.0339	-11.06	47.35	-0.09	-0.05	36.15
57.16	-0.0335	-11.14	47.18	-0.09	-0.05	35.91
57.17	-0.0331	-11.21	47.01	-0.09	-0.05	35.66
57.18	-0.0326	-11.29	46.84	-0.09	-0.05	35.41
57.19	-0.0322	-11.37	46.67	-0.09	-0.05	35.16
57.20	-0.0318	-11.45	46.50	-0.09	-0.05	34.91
57.21	-0.0314	-11.53	46.32	-0.09	-0.04	34.67
57.22	-0.0310	-11.60	46.15	-0.09	-0.04	34.42
57.23	-0.0306	-11.68	45.98	-0.09	-0.04	34.17
57.24	-0.0302	-11.76	45.81	-0.09	-0.04	33.92
57.25	-0.0298	-11.84	45.64	-0.09	-0.04	33.67
57.26	-0.0294	-11.92	45.47	-0.09	-0.04	33.42
57.27	-0.0290	-11.99	45.30	-0.09	-0.04	33.18
57.28	-0.0286	-12.07	45.13	-0.08	-0.04	32.93
57.29	-0.0282	-12.15	44.95	-0.08	-0.04	32.68
57.30	-0.0278	-12.23	44.78	-0.08	-0.04	32.43
57.31	-0.0274	-12.31	44.61	-0.08	-0.04	32.18

57.32	-0.0270	-12.38	44.44	-0.08	-0.04	31.94
57.33	-0.0266	-12.46	44.27	-0.08	-0.04	31.69
57.34	-0.0261	-12.44	43.83	-0.08	-0.04	31.27
57.35	-0.0254	-12.38	43.21	-0.08	-0.04	30.72
57.36	-0.0248	-12.30	42.56	-0.08	-0.04	30.15
57.37	-0.0242	-12.22	41.92	-0.08	-0.04	29.59
57.38	-0.0236	-12.13	41.27	-0.08	-0.04	29.02
57.39	-0.0229	-12.05	40.60	-0.08	-0.03	28.44
57.40	-0.0222	-11.89	39.73	-0.07	-0.03	27.73
57.41	-0.0208	-11.18	37.34	-0.07	-0.03	26.05
57.42	-0.0185	-9.96	33.25	-0.06	-0.03	23.19
57.43	-0.0159	-8.54	28.47	-0.05	-0.02	19.85
57.44	-0.0134	-7.21	24.01	-0.04	-0.02	16.74
57.45	-0.0112	-6.03	20.07	-0.04	-0.02	13.99
57.46	-0.0091	-4.88	16.26	-0.03	-0.01	11.34
57.47	-0.0069	-3.69	12.30	-0.02	-0.01	8.58
57.48	-0.0046	-2.45	8.17	-0.02	-0.01	5.70
57.49	-0.0022	-1.21	4.03	-0.01	0.00	2.81
57.50	0.0000	0.00	0.00	0.00	0.00	-0.01
57.51	0.0022	-3.96	1.19	0.00	-0.01	-2.79
57.52	0.0045	-8.06	2.42	-0.01	-0.02	-5.66
57.53	0.0068	-12.18	3.65	-0.01	-0.02	-8.56
57.54	0.0091	-16.26	4.88	-0.01	-0.03	-11.43
57.55	0.0113	-20.31	6.09	-0.02	-0.04	-14.27
57.56	0.0128	-22.60	6.67	-0.02	-0.04	-15.99
57.57	0.0135	-23.51	6.86	-0.02	-0.04	-16.71
57.58	0.0141	-24.15	6.98	-0.02	-0.05	-17.24
57.59	0.0147	-24.84	7.07	-0.02	-0.05	-17.84
57.60	0.0154	-25.50	7.15	-0.02	-0.05	-18.43
57.61	0.0160	-26.14	7.23	-0.02	-0.05	-18.98
57.62	0.0166	-26.78	7.31	-0.02	-0.05	-19.55
57.63	0.0172	-27.27	7.33	-0.03	-0.05	-20.02
57.64	0.0176	-27.52	7.28	-0.03	-0.05	-20.32
57.65	0.0180	-27.70	7.21	-0.03	-0.05	-20.57
57.66	0.0184	-27.88	7.13	-0.03	-0.05	-20.83
57.67	0.0188	-28.05	7.06	-0.03	-0.05	-21.08
57.68	0.0192	-28.23	6.98	-0.03	-0.05	-21.33
57.69	0.0196	-28.40	6.90	-0.03	-0.05	-21.58
57.70	0.0200	-28.57	6.82	-0.03	-0.05	-21.83
57.71	0.0205	-28.74	6.74	-0.03	-0.05	-22.08
57.72	0.0209	-28.91	6.67	-0.03	-0.06	-22.33
57.73	0.0213	-29.08	6.59	-0.03	-0.06	-22.58
57.74	0.0217	-29.25	6.51	-0.03	-0.06	-22.83
57.75	0.0221	-29.42	6.43	-0.03	-0.06	-23.08
57.76	0.0225	-29.59	6.35	-0.03	-0.06	-23.33
57.77	0.0229	-29.77	6.28	-0.03	-0.06	-23.58
57.78	0.0233	-29.94	6.20	-0.03	-0.06	-23.83
57.79	0.0237	-30.11	6.12	-0.03	-0.06	-24.08
57.80	0.0241	-30.28	6.04	-0.03	-0.06	-24.33
57.81	0.0245	-30.45	5.96	-0.03	-0.06	-24.58
57.82	0.0249	-30.62	5.89	-0.03	-0.06	-24.83
57.83	0.0253	-30.79	5.81	-0.03	-0.06	-25.08
57.84	0.0257	-30.96	5.73	-0.03	-0.06	-25.33
57.85	0.0261	-31.13	5.65	-0.03	-0.06	-25.58
57.86	0.0265	-31.31	5.58	-0.04	-0.06	-25.83
57.87	0.0269	-31.48	5.50	-0.04	-0.06	-26.08
57.88	0.0273	-31.65	5.42	-0.04	-0.06	-26.33

57.89	0.0278	-31.82	5.34	-0.04	-0.06	-26.58
57.90	0.0282	-31.99	5.26	-0.04	-0.06	-26.83
57.91	0.0286	-32.16	5.19	-0.04	-0.06	-27.08
57.92	0.0290	-32.33	5.11	-0.04	-0.06	-27.33
57.93	0.0294	-32.50	5.03	-0.04	-0.06	-27.58
57.94	0.0298	-32.67	4.95	-0.04	-0.06	-27.83
57.95	0.0305	-33.72	5.19	-0.04	-0.07	-28.63
57.96	0.0322	-36.60	6.04	-0.04	-0.07	-30.68
57.97	0.0344	-40.39	7.13	-0.05	-0.08	-33.39
57.98	0.0365	-43.95	8.15	-0.05	-0.09	-35.93
57.99	0.0383	-47.01	9.05	-0.05	-0.09	-38.11
58.00	0.0400	-49.96	9.91	-0.05	-0.10	-40.21
58.01	0.0399	-49.87	9.86	-0.05	-0.10	-40.16
58.02	0.0391	-49.59	10.09	-0.05	-0.10	-39.65
58.03	0.0387	-49.46	10.16	-0.05	-0.10	-39.45
58.04	0.0384	-49.28	10.19	-0.05	-0.09	-39.23
58.05	0.0379	-49.11	10.30	-0.05	-0.09	-38.96
58.06	0.0375	-48.94	10.37	-0.05	-0.09	-38.71
58.07	0.0371	-48.77	10.45	-0.05	-0.09	-38.47
58.08	0.0367	-48.59	10.53	-0.05	-0.09	-38.21
58.09	0.0363	-48.42	10.61	-0.05	-0.09	-37.96
58.10	0.0359	-48.25	10.68	-0.05	-0.09	-37.71
58.11	0.0355	-48.08	10.76	-0.05	-0.09	-37.46
58.12	0.0351	-47.91	10.84	-0.05	-0.09	-37.21
58.13	0.0347	-47.74	10.92	-0.05	-0.09	-36.96
58.14	0.0343	-47.57	11.00	-0.05	-0.09	-36.71
58.15	0.0339	-47.40	11.07	-0.05	-0.09	-36.46
58.16	0.0335	-47.23	11.15	-0.05	-0.09	-36.21
58.17	0.0331	-47.06	11.23	-0.05	-0.09	-35.96
58.18	0.0327	-46.88	11.31	-0.05	-0.09	-35.71
58.19	0.0323	-46.71	11.39	-0.05	-0.09	-35.46
58.20	0.0319	-46.54	11.46	-0.05	-0.09	-35.21
58.21	0.0315	-46.37	11.54	-0.04	-0.09	-34.96
58.22	0.0310	-46.20	11.62	-0.04	-0.09	-34.71
58.23	0.0306	-46.03	11.70	-0.04	-0.09	-34.46
58.24	0.0302	-45.86	11.78	-0.04	-0.09	-34.21
58.25	0.0298	-45.69	11.85	-0.04	-0.09	-33.96
58.26	0.0294	-45.52	11.93	-0.04	-0.09	-33.71
58.27	0.0290	-45.34	12.01	-0.04	-0.09	-33.46
58.28	0.0286	-45.17	12.09	-0.04	-0.08	-33.21
58.29	0.0282	-45.00	12.17	-0.04	-0.08	-32.96
58.30	0.0278	-44.83	12.24	-0.04	-0.08	-32.71
58.31	0.0274	-44.66	12.32	-0.04	-0.08	-32.46
58.32	0.0270	-44.49	12.40	-0.04	-0.08	-32.21
58.33	0.0266	-44.32	12.48	-0.04	-0.08	-31.96
58.34	0.0261	-43.87	12.46	-0.04	-0.08	-31.54
58.35	0.0254	-43.25	12.39	-0.04	-0.08	-30.98
58.36	0.0248	-42.60	12.31	-0.04	-0.08	-30.41
58.37	0.0242	-41.96	12.23	-0.04	-0.08	-29.84
58.38	0.0236	-41.31	12.15	-0.04	-0.08	-29.27
58.39	0.0229	-40.64	12.06	-0.03	-0.08	-28.69
58.40	0.0222	-39.75	11.89	-0.03	-0.07	-27.97
58.41	0.0208	-37.34	11.19	-0.03	-0.07	-26.26
58.42	0.0185	-33.24	9.96	-0.03	-0.06	-23.37
58.43	0.0159	-28.46	8.54	-0.02	-0.05	-20.00
58.44	0.0134	-24.02	7.21	-0.02	-0.04	-16.87
58.45	0.0112	-20.08	6.03	-0.02	-0.04	-14.10

58.46	0.0091	-16.27	4.88	-0.01	-0.03	-11.43
58.47	0.0069	-12.30	3.69	-0.01	-0.02	-8.64
58.48	0.0046	-8.17	2.45	-0.01	-0.02	-5.74
58.49	0.0022	-4.03	1.21	0.00	-0.01	-2.83
58.50	0.0000	0.00	0.00	0.00	0.00	-0.01
58.51	-0.0022	-1.19	3.96	-0.01	0.00	2.76
58.52	-0.0045	-2.42	8.06	-0.02	-0.01	5.62
58.53	-0.0068	-3.65	12.18	-0.02	-0.01	8.49
58.54	-0.0091	-4.88	16.26	-0.03	-0.01	11.34
58.55	-0.0113	-6.09	20.31	-0.04	-0.02	14.16
58.56	-0.0136	-7.31	24.35	-0.05	-0.02	16.97
58.57	-0.0158	-8.52	28.40	-0.05	-0.02	19.80
58.58	-0.0181	-9.74	32.47	-0.06	-0.03	22.64
58.59	-0.0203	-10.96	36.53	-0.07	-0.03	25.47
58.60	-0.0221	-11.74	39.39	-0.07	-0.03	27.54
58.61	-0.0230	-11.99	40.56	-0.08	-0.03	28.46
58.62	-0.0235	-12.12	41.21	-0.08	-0.04	28.98
58.63	-0.0242	-12.21	41.90	-0.08	-0.04	29.57
58.64	-0.0248	-12.30	42.58	-0.08	-0.04	30.16
58.65	-0.0254	-12.38	43.22	-0.08	-0.04	30.72
58.66	-0.0260	-12.46	43.86	-0.08	-0.04	31.28
58.67	-0.0266	-12.43	44.22	-0.08	-0.04	31.66
58.68	-0.0270	-12.38	44.43	-0.08	-0.04	31.93
58.69	-0.0274	-12.31	44.61	-0.08	-0.04	32.18
58.70	-0.0278	-12.23	44.78	-0.08	-0.04	32.43
58.71	-0.0282	-12.15	44.95	-0.08	-0.04	32.68
58.72	-0.0286	-12.07	45.13	-0.08	-0.04	32.93
58.73	-0.0290	-11.99	45.30	-0.09	-0.04	33.18
58.74	-0.0294	-11.92	45.47	-0.09	-0.04	33.42
58.75	-0.0298	-11.84	45.64	-0.09	-0.04	33.67
58.76	-0.0302	-11.76	45.81	-0.09	-0.04	33.92
58.77	-0.0306	-11.68	45.98	-0.09	-0.04	34.17
58.78	-0.0310	-11.60	46.15	-0.09	-0.04	34.42
58.79	-0.0314	-11.53	46.32	-0.09	-0.04	34.67
58.80	-0.0318	-11.45	46.50	-0.09	-0.05	34.91
58.81	-0.0322	-11.37	46.67	-0.09	-0.05	35.16
58.82	-0.0326	-11.29	46.84	-0.09	-0.05	35.41
58.83	-0.0331	-11.21	47.01	-0.09	-0.05	35.66
58.84	-0.0335	-11.14	47.18	-0.09	-0.05	35.91
58.85	-0.0339	-11.06	47.35	-0.09	-0.05	36.15
58.86	-0.0343	-10.98	47.52	-0.09	-0.05	36.40
58.87	-0.0347	-10.90	47.69	-0.09	-0.05	36.65
58.88	-0.0351	-10.82	47.86	-0.09	-0.05	36.90
58.89	-0.0355	-10.75	48.04	-0.09	-0.05	37.15
58.90	-0.0359	-10.67	48.21	-0.09	-0.05	37.40
58.91	-0.0363	-10.59	48.38	-0.09	-0.05	37.64
58.92	-0.0367	-10.51	48.55	-0.09	-0.05	37.89
58.93	-0.0371	-10.43	48.72	-0.09	-0.05	38.14
58.94	-0.0375	-10.36	48.89	-0.09	-0.05	38.39
58.95	-0.0379	-10.28	49.06	-0.09	-0.05	38.64
58.96	-0.0383	-10.20	49.23	-0.09	-0.05	38.89
58.97	-0.0387	-10.12	49.40	-0.10	-0.05	39.13
58.98	-0.0391	-10.05	49.58	-0.10	-0.05	39.38
58.99	-0.0395	-9.97	49.75	-0.10	-0.05	39.63
59.00	-0.0402	-10.08	50.44	-0.10	-0.05	40.21
59.01	-0.0400	-10.07	50.29	-0.10	-0.05	40.07
59.02	-0.0393	-10.23	50.06	-0.10	-0.05	39.68

59.03	-0.0389	-10.30	49.90	-0.10	-0.05	39.45
59.04	-0.0386	-10.35	49.73	-0.10	-0.05	39.23
59.05	-0.0382	-10.45	49.56	-0.10	-0.05	38.96
59.06	-0.0377	-10.52	49.38	-0.09	-0.05	38.72
59.07	-0.0373	-10.60	49.21	-0.09	-0.05	38.47
59.08	-0.0369	-10.68	49.04	-0.09	-0.05	38.22
59.09	-0.0365	-10.76	48.87	-0.09	-0.05	37.97
59.10	-0.0361	-10.83	48.70	-0.09	-0.05	37.72
59.11	-0.0357	-10.91	48.53	-0.09	-0.05	37.48
59.12	-0.0353	-10.99	48.36	-0.09	-0.05	37.23
59.13	-0.0349	-11.07	48.19	-0.09	-0.05	36.98
59.14	-0.0345	-11.15	48.02	-0.09	-0.05	36.73
59.15	-0.0341	-11.22	47.85	-0.09	-0.05	36.48
59.16	-0.0337	-11.30	47.67	-0.09	-0.05	36.23
59.17	-0.0333	-11.38	47.50	-0.09	-0.05	35.99
59.18	-0.0329	-11.46	47.33	-0.09	-0.05	35.74
59.19	-0.0325	-11.54	47.16	-0.09	-0.05	35.49
59.20	-0.0321	-11.61	46.99	-0.09	-0.05	35.24
59.21	-0.0317	-11.69	46.82	-0.09	-0.05	34.99
59.22	-0.0313	-11.77	46.65	-0.09	-0.04	34.75
59.23	-0.0309	-11.85	46.48	-0.09	-0.04	34.50
59.24	-0.0304	-11.93	46.30	-0.09	-0.04	34.25
59.25	-0.0300	-12.00	46.13	-0.09	-0.04	34.00
59.26	-0.0296	-12.08	45.96	-0.09	-0.04	33.75
59.27	-0.0292	-12.16	45.79	-0.09	-0.04	33.50
59.28	-0.0288	-12.24	45.62	-0.09	-0.04	33.25
59.29	-0.0284	-12.31	45.45	-0.09	-0.04	33.01
59.30	-0.0280	-12.39	45.28	-0.08	-0.04	32.76
59.31	-0.0276	-12.47	45.11	-0.08	-0.04	32.51
59.32	-0.0272	-12.55	44.93	-0.08	-0.04	32.26
59.33	-0.0268	-12.63	44.76	-0.08	-0.04	32.01
59.34	-0.0263	-12.59	44.29	-0.08	-0.04	31.57
59.35	-0.0256	-12.52	43.65	-0.08	-0.04	31.01
59.36	-0.0250	-12.45	43.00	-0.08	-0.04	30.44
59.37	-0.0244	-12.36	42.36	-0.08	-0.04	29.88
59.38	-0.0238	-12.28	41.71	-0.08	-0.04	29.31
59.39	-0.0231	-12.20	41.04	-0.08	-0.03	28.73
59.40	-0.0223	-11.96	39.98	-0.07	-0.03	27.91
59.41	-0.0208	-11.19	37.35	-0.07	-0.03	26.06
59.42	-0.0185	-9.94	33.15	-0.06	-0.03	23.12
59.43	-0.0158	-8.52	28.41	-0.05	-0.02	19.81
59.44	-0.0134	-7.21	24.03	-0.04	-0.02	16.75
59.45	-0.0112	-6.04	20.11	-0.04	-0.02	14.02
59.46	-0.0091	-4.88	16.28	-0.03	-0.01	11.35
59.47	-0.0068	-3.69	12.29	-0.02	-0.01	8.57
59.48	-0.0045	-2.45	8.16	-0.02	-0.01	5.69
59.49	-0.0022	-1.21	4.03	-0.01	0.00	2.81
59.50	0.0000	0.00	0.00	0.00	0.00	-0.01
59.51	0.0022	-3.96	1.18	0.00	-0.01	-2.78
59.52	0.0045	-8.06	2.42	-0.01	-0.02	-5.66
59.53	0.0068	-12.18	3.65	-0.01	-0.02	-8.56
59.54	0.0091	-16.27	4.88	-0.01	-0.03	-11.43
59.55	0.0113	-20.31	6.10	-0.02	-0.04	-14.27
59.56	0.0136	-24.35	7.31	-0.02	-0.05	-17.11
59.57	0.0158	-28.40	8.52	-0.02	-0.05	-19.95
59.58	0.0181	-32.46	9.74	-0.03	-0.06	-22.81
59.59	0.0203	-36.53	10.96	-0.03	-0.07	-25.67

59.60	0.0221	-39.42	11.75	-0.03	-0.07	-27.77
59.61	0.0230	-40.61	12.01	-0.03	-0.08	-28.71
59.62	0.0235	-41.25	12.13	-0.04	-0.08	-29.23
59.63	0.0242	-41.94	12.23	-0.04	-0.08	-29.82
59.64	0.0248	-42.62	12.31	-0.04	-0.08	-30.42
59.65	0.0254	-43.26	12.39	-0.04	-0.08	-30.98
59.66	0.0261	-43.90	12.47	-0.04	-0.08	-31.55
59.67	0.0266	-44.26	12.45	-0.04	-0.08	-31.93
59.68	0.0270	-44.47	12.39	-0.04	-0.08	-32.20
59.69	0.0274	-44.66	12.32	-0.04	-0.08	-32.46
59.70	0.0278	-44.83	12.24	-0.04	-0.08	-32.71
59.71	0.0282	-45.00	12.17	-0.04	-0.08	-32.96
59.72	0.0286	-45.17	12.09	-0.04	-0.08	-33.21
59.73	0.0290	-45.34	12.01	-0.04	-0.09	-33.46
59.74	0.0294	-45.52	11.93	-0.04	-0.09	-33.71
59.75	0.0298	-45.69	11.85	-0.04	-0.09	-33.96
59.76	0.0302	-45.86	11.78	-0.04	-0.09	-34.21
59.77	0.0306	-46.03	11.70	-0.04	-0.09	-34.46
59.78	0.0310	-46.20	11.62	-0.04	-0.09	-34.71
59.79	0.0315	-46.37	11.54	-0.04	-0.09	-34.96
59.80	0.0319	-46.54	11.46	-0.05	-0.09	-35.21
59.81	0.0323	-46.71	11.39	-0.05	-0.09	-35.46
59.82	0.0327	-46.88	11.31	-0.05	-0.09	-35.71
59.83	0.0331	-47.06	11.23	-0.05	-0.09	-35.96
59.84	0.0335	-47.23	11.15	-0.05	-0.09	-36.21
59.85	0.0339	-47.40	11.07	-0.05	-0.09	-36.46
59.86	0.0343	-47.57	11.00	-0.05	-0.09	-36.71
59.87	0.0347	-47.74	10.92	-0.05	-0.09	-36.96
59.88	0.0351	-47.91	10.84	-0.05	-0.09	-37.21
59.89	0.0355	-48.08	10.76	-0.05	-0.09	-37.46
59.90	0.0359	-48.25	10.68	-0.05	-0.09	-37.71
59.91	0.0363	-48.42	10.61	-0.05	-0.09	-37.96
59.92	0.0367	-48.60	10.53	-0.05	-0.09	-38.21
59.93	0.0371	-48.77	10.45	-0.05	-0.09	-38.46
59.94	0.0375	-48.94	10.37	-0.05	-0.09	-38.71
59.95	0.0379	-49.11	10.29	-0.05	-0.09	-38.96
59.96	0.0383	-49.28	10.22	-0.05	-0.09	-39.21
59.97	0.0388	-49.45	10.14	-0.05	-0.10	-39.46
59.98	0.0392	-49.62	10.06	-0.05	-0.10	-39.71
59.99	0.0396	-49.79	9.98	-0.05	-0.10	-39.96
60.00	0.0402	-50.47	10.09	-0.05	-0.10	-40.53
60.01	0.0400	-50.30	10.08	-0.05	-0.10	-40.38
60.02	0.0393	-50.06	10.24	-0.05	-0.10	-39.97
60.03	0.0389	-49.90	10.32	-0.05	-0.10	-39.72
60.04	0.0385	-49.71	10.38	-0.05	-0.10	-39.48
60.05	0.0380	-49.53	10.48	-0.05	-0.10	-39.20
60.06	0.0376	-49.35	10.56	-0.05	-0.09	-38.94
60.07	0.0372	-49.17	10.64	-0.05	-0.09	-38.68
60.08	0.0368	-48.99	10.72	-0.05	-0.09	-38.41
60.09	0.0363	-48.81	10.80	-0.05	-0.09	-38.15
60.10	0.0359	-48.63	10.88	-0.05	-0.09	-37.89
60.11	0.0355	-48.45	10.97	-0.05	-0.09	-37.62
60.12	0.0351	-48.27	11.05	-0.05	-0.09	-37.36
60.13	0.0346	-48.09	11.13	-0.05	-0.09	-37.10
60.14	0.0342	-47.91	11.21	-0.05	-0.09	-36.83
60.15	0.0338	-47.72	11.30	-0.05	-0.09	-36.57
60.16	0.0333	-47.54	11.38	-0.05	-0.09	-36.30

60.17	0.0329	-47.36	11.46	-0.05	-0.09	-36.04
60.18	0.0325	-47.18	11.54	-0.05	-0.09	-35.78
60.19	0.0321	-47.00	11.63	-0.05	-0.09	-35.51
60.20	0.0316	-46.82	11.71	-0.05	-0.09	-35.25
60.21	0.0312	-46.64	11.79	-0.04	-0.09	-34.98
60.22	0.0308	-46.46	11.87	-0.04	-0.09	-34.72
60.23	0.0303	-46.28	11.95	-0.04	-0.09	-34.46
60.24	0.0299	-46.10	12.04	-0.04	-0.09	-34.19
60.25	0.0295	-45.92	12.12	-0.04	-0.09	-33.93
60.26	0.0291	-45.74	12.20	-0.04	-0.09	-33.66
60.27	0.0286	-45.56	12.28	-0.04	-0.09	-33.40
60.28	0.0282	-45.38	12.37	-0.04	-0.09	-33.14
60.29	0.0278	-45.20	12.45	-0.04	-0.08	-32.87
60.30	0.0274	-45.01	12.53	-0.04	-0.08	-32.61
60.31	0.0269	-44.83	12.61	-0.04	-0.08	-32.35
60.32	0.0264	-44.42	12.61	-0.04	-0.08	-31.93
60.33	0.0258	-43.78	12.54	-0.04	-0.08	-31.36
60.34	0.0251	-43.10	12.46	-0.04	-0.08	-30.75
60.35	0.0244	-42.41	12.38	-0.04	-0.08	-30.15
60.36	0.0238	-41.73	12.29	-0.04	-0.08	-29.55
60.37	0.0231	-41.03	12.20	-0.03	-0.08	-28.94
60.38	0.0222	-39.72	11.89	-0.03	-0.07	-27.95
60.39	0.0205	-36.73	11.00	-0.03	-0.07	-25.83
60.40	0.0179	-32.19	9.65	-0.03	-0.06	-22.63
60.41	0.0152	-27.22	8.17	-0.02	-0.05	-19.13
60.42	0.0126	-22.67	6.81	-0.02	-0.04	-15.92
60.43	0.0103	-18.55	5.57	-0.02	-0.03	-13.03
60.44	0.0081	-14.49	4.35	-0.01	-0.03	-10.18
60.45	0.0057	-10.26	3.08	-0.01	-0.02	-7.21
60.46	0.0033	-5.90	1.77	0.00	-0.01	-4.14
60.47	0.0009	-1.55	0.46	0.00	0.00	-1.09
60.48	-0.0015	-0.77	2.59	-0.01	0.00	1.81
60.49	-0.0039	-2.07	6.90	-0.02	-0.01	4.81
60.50	-0.0063	-3.38	11.26	-0.02	-0.01	7.85
60.51	-0.0087	-4.68	15.58	-0.03	-0.01	10.86
60.52	-0.0111	-5.96	19.86	-0.04	-0.02	13.85
60.53	-0.0134	-7.24	24.13	-0.04	-0.02	16.82
60.54	-0.0158	-8.52	28.40	-0.05	-0.02	19.80
60.55	-0.0182	-9.81	32.69	-0.06	-0.03	22.79
60.56	-0.0206	-11.10	36.98	-0.07	-0.03	25.78
60.57	-0.0224	-11.90	39.94	-0.07	-0.03	27.93
60.58	-0.0233	-12.16	41.15	-0.08	-0.04	28.88
60.59	-0.0239	-12.29	41.83	-0.08	-0.04	29.43
60.60	-0.0246	-12.39	42.55	-0.08	-0.04	30.05
60.61	-0.0253	-12.48	43.27	-0.08	-0.04	30.68
60.62	-0.0259	-12.56	43.95	-0.08	-0.04	31.26
60.63	-0.0265	-12.62	44.54	-0.08	-0.04	31.80
60.64	-0.0270	-12.56	44.83	-0.08	-0.04	32.14
60.65	-0.0274	-12.50	45.03	-0.08	-0.04	32.41
60.66	-0.0279	-12.42	45.22	-0.08	-0.04	32.67
60.67	-0.0283	-12.33	45.40	-0.09	-0.04	32.94
60.68	-0.0287	-12.25	45.58	-0.09	-0.04	33.20
60.69	-0.0292	-12.17	45.76	-0.09	-0.04	33.46
60.70	-0.0296	-12.09	45.94	-0.09	-0.04	33.72
60.71	-0.0300	-12.01	46.12	-0.09	-0.04	33.99
60.72	-0.0304	-11.93	46.30	-0.09	-0.04	34.25
60.73	-0.0309	-11.84	46.49	-0.09	-0.04	34.51

60.74	-0.0313	-11.76	46.67	-0.09	-0.04	34.77
60.75	-0.0317	-11.68	46.85	-0.09	-0.05	35.03
60.76	-0.0322	-11.60	47.03	-0.09	-0.05	35.30
60.77	-0.0326	-11.51	47.21	-0.09	-0.05	35.56
60.78	-0.0330	-11.43	47.39	-0.09	-0.05	35.82
60.79	-0.0334	-11.35	47.57	-0.09	-0.05	36.08
60.80	-0.0339	-11.27	47.75	-0.09	-0.05	36.34
60.81	-0.0343	-11.18	47.93	-0.09	-0.05	36.61
60.82	-0.0347	-11.10	48.11	-0.09	-0.05	36.87
60.83	-0.0352	-11.02	48.29	-0.09	-0.05	37.13
60.84	-0.0356	-10.94	48.47	-0.09	-0.05	37.39
60.85	-0.0360	-10.86	48.65	-0.09	-0.05	37.65
60.86	-0.0364	-10.77	48.83	-0.09	-0.05	37.92
60.87	-0.0369	-10.69	49.02	-0.09	-0.05	38.18
60.88	-0.0373	-10.61	49.20	-0.09	-0.05	38.44
60.89	-0.0377	-10.53	49.38	-0.09	-0.05	38.70
60.90	-0.0382	-10.44	49.56	-0.10	-0.05	38.96
60.91	-0.0386	-10.36	49.74	-0.10	-0.05	39.23
60.92	-0.0390	-10.28	49.92	-0.10	-0.05	39.49
60.93	-0.0394	-10.20	50.10	-0.10	-0.05	39.75
60.94	-0.0399	-10.11	50.28	-0.10	-0.05	40.01
60.95	-0.0406	-10.29	51.17	-0.10	-0.05	40.72
60.96	-0.0421	-11.00	53.65	-0.10	-0.06	42.49
60.97	-0.0442	-12.04	57.29	-0.11	-0.06	45.08
60.98	-0.0464	-13.13	61.06	-0.12	-0.06	47.75
60.99	-0.0483	-14.08	64.37	-0.12	-0.07	50.09
61.00	-0.0500	-14.93	67.30	-0.13	-0.07	52.17
61.01	-0.0499	-14.90	67.18	-0.13	-0.07	52.09
61.02	-0.0490	-15.13	66.89	-0.13	-0.07	51.56
61.03	-0.0486	-15.21	66.74	-0.13	-0.07	51.33
61.04	-0.0483	-15.26	66.54	-0.13	-0.07	51.08
61.05	-0.0478	-15.37	66.35	-0.13	-0.07	50.78
61.06	-0.0473	-15.45	66.16	-0.13	-0.07	50.51
61.07	-0.0469	-15.54	65.97	-0.13	-0.07	50.24
61.08	-0.0464	-15.63	65.78	-0.13	-0.06	49.96
61.09	-0.0460	-15.71	65.59	-0.12	-0.06	49.69
61.10	-0.0455	-15.80	65.40	-0.12	-0.06	49.41
61.11	-0.0451	-15.89	65.21	-0.12	-0.06	49.13
61.12	-0.0446	-15.97	65.02	-0.12	-0.06	48.86
61.13	-0.0442	-16.06	64.83	-0.12	-0.06	48.58
61.14	-0.0437	-16.15	64.64	-0.12	-0.06	48.31
61.15	-0.0433	-16.23	64.45	-0.12	-0.06	48.03
61.16	-0.0428	-16.32	64.26	-0.12	-0.06	47.76
61.17	-0.0424	-16.41	64.07	-0.12	-0.06	47.48
61.18	-0.0419	-16.49	63.88	-0.12	-0.06	47.20
61.19	-0.0415	-16.58	63.69	-0.12	-0.06	46.93
61.20	-0.0410	-16.67	63.50	-0.12	-0.06	46.65
61.21	-0.0406	-16.75	63.31	-0.12	-0.06	46.38
61.22	-0.0401	-16.84	63.11	-0.12	-0.06	46.10
61.23	-0.0397	-16.93	62.92	-0.12	-0.06	45.82
61.24	-0.0392	-17.01	62.73	-0.12	-0.06	45.55
61.25	-0.0388	-17.10	62.54	-0.12	-0.06	45.27
61.26	-0.0383	-17.19	62.35	-0.12	-0.06	45.00
61.27	-0.0379	-17.27	62.16	-0.12	-0.06	44.72
61.28	-0.0374	-17.36	61.97	-0.12	-0.06	44.45
61.29	-0.0370	-17.44	61.78	-0.12	-0.05	44.17
61.30	-0.0365	-17.53	61.59	-0.11	-0.05	43.89

61.31	-0.0361	-17.62	61.40	-0.11	-0.05	43.62
61.32	-0.0355	-17.63	61.02	-0.11	-0.05	43.22
61.33	-0.0349	-17.57	60.38	-0.11	-0.05	42.64
61.34	-0.0342	-17.48	59.65	-0.11	-0.05	42.00
61.35	-0.0335	-17.39	58.93	-0.11	-0.05	41.37
61.36	-0.0328	-17.30	58.19	-0.11	-0.05	40.74
61.37	-0.0321	-17.19	57.42	-0.11	-0.05	40.07
61.38	-0.0307	-16.48	55.00	-0.10	-0.05	38.37
61.39	-0.0282	-15.16	50.57	-0.09	-0.04	35.27
61.40	-0.0252	-13.57	45.23	-0.08	-0.04	31.53
61.41	-0.0224	-12.07	40.20	-0.07	-0.03	28.02
61.42	-0.0199	-10.74	35.80	-0.07	-0.03	24.95
61.43	-0.0176	-9.48	31.59	-0.06	-0.03	22.02
61.44	-0.0152	-8.16	27.20	-0.05	-0.02	18.97
61.45	-0.0126	-6.79	22.62	-0.04	-0.02	15.77
61.46	-0.0100	-5.41	18.01	-0.03	-0.02	12.56
61.47	-0.0075	-4.05	13.48	-0.03	-0.01	9.40
61.48	-0.0050	-2.70	9.00	-0.02	-0.01	6.28
61.49	-0.0025	-1.36	4.52	-0.01	0.00	3.15
61.50	0.0000	0.00	0.00	0.00	0.00	-0.01
61.51	0.0025	-4.38	1.31	0.00	-0.01	-3.09
61.52	0.0050	-8.97	2.69	-0.01	-0.02	-6.30
61.53	0.0075	-13.55	4.06	-0.01	-0.03	-9.52
61.54	0.0101	-18.07	5.42	-0.02	-0.03	-12.70
61.55	0.0126	-22.56	6.77	-0.02	-0.04	-15.85
61.56	0.0151	-27.05	8.12	-0.02	-0.05	-19.00
61.57	0.0176	-31.56	9.47	-0.03	-0.06	-22.17
61.58	0.0201	-36.07	10.83	-0.03	-0.07	-25.35
61.59	0.0222	-39.61	11.82	-0.03	-0.07	-27.90
61.60	0.0233	-41.10	12.14	-0.03	-0.08	-29.07
61.61	0.0239	-41.82	12.29	-0.04	-0.08	-29.64
61.62	0.0246	-42.56	12.40	-0.04	-0.08	-30.28
61.63	0.0253	-43.33	12.49	-0.04	-0.08	-30.96
61.64	0.0260	-44.04	12.58	-0.04	-0.08	-31.58
61.65	0.0266	-44.61	12.62	-0.04	-0.08	-32.11
61.66	0.0271	-44.89	12.56	-0.04	-0.08	-32.46
61.67	0.0276	-45.10	12.48	-0.04	-0.08	-32.74
61.68	0.0280	-45.30	12.40	-0.04	-0.08	-33.02
61.69	0.0285	-45.49	12.31	-0.04	-0.09	-33.30
61.70	0.0289	-45.68	12.23	-0.04	-0.09	-33.58
61.71	0.0294	-45.87	12.14	-0.04	-0.09	-33.86
61.72	0.0298	-46.06	12.05	-0.04	-0.09	-34.14
61.73	0.0303	-46.25	11.97	-0.04	-0.09	-34.41
61.74	0.0307	-46.44	11.88	-0.04	-0.09	-34.69
61.75	0.0312	-46.63	11.79	-0.04	-0.09	-34.97
61.76	0.0316	-46.82	11.71	-0.05	-0.09	-35.25
61.77	0.0321	-47.01	11.62	-0.05	-0.09	-35.52
61.78	0.0325	-47.20	11.53	-0.05	-0.09	-35.80
61.79	0.0330	-47.39	11.45	-0.05	-0.09	-36.08
61.80	0.0334	-47.58	11.36	-0.05	-0.09	-36.36
61.81	0.0339	-47.77	11.27	-0.05	-0.09	-36.64
61.82	0.0343	-47.96	11.19	-0.05	-0.09	-36.92
61.83	0.0348	-48.15	11.10	-0.05	-0.09	-37.19
61.84	0.0352	-48.34	11.01	-0.05	-0.09	-37.47
61.85	0.0357	-48.53	10.93	-0.05	-0.09	-37.75
61.86	0.0361	-48.72	10.84	-0.05	-0.09	-38.03
61.87	0.0366	-48.91	10.75	-0.05	-0.09	-38.30

61.88	0.0370	-49.10	10.67	-0.05	-0.09	-38.58
61.89	0.0375	-49.29	10.58	-0.05	-0.09	-38.86
61.90	0.0379	-49.49	10.50	-0.05	-0.10	-39.14
61.91	0.0384	-49.68	10.41	-0.05	-0.10	-39.42
61.92	0.0388	-49.87	10.32	-0.05	-0.10	-39.69
61.93	0.0393	-50.06	10.23	-0.05	-0.10	-39.97
61.94	0.0397	-50.24	10.15	-0.05	-0.10	-40.25
61.95	0.0403	-50.76	10.18	-0.05	-0.10	-40.74
61.96	0.0416	-52.91	10.79	-0.06	-0.10	-42.28
61.97	0.0438	-56.58	11.84	-0.06	-0.11	-44.91
61.98	0.0462	-60.65	13.01	-0.06	-0.12	-47.82
61.99	0.0482	-64.25	14.05	-0.07	-0.12	-50.39
62.00	0.0501	-67.34	14.94	-0.07	-0.13	-52.60
62.01	0.0499	-67.23	14.91	-0.07	-0.13	-52.52
62.02	0.0490	-66.93	15.15	-0.07	-0.13	-51.97
62.03	0.0487	-66.78	15.23	-0.07	-0.13	-51.75
62.04	0.0483	-66.58	15.27	-0.07	-0.13	-51.50
62.05	0.0478	-66.39	15.39	-0.07	-0.13	-51.20
62.06	0.0473	-66.20	15.47	-0.07	-0.13	-50.92
62.07	0.0469	-66.01	15.55	-0.07	-0.13	-50.65
62.08	0.0464	-65.82	15.64	-0.06	-0.13	-50.37
62.09	0.0460	-65.63	15.73	-0.06	-0.12	-50.09
62.10	0.0455	-65.44	15.81	-0.06	-0.12	-49.81
62.11	0.0451	-65.25	15.90	-0.06	-0.12	-49.54
62.12	0.0446	-65.06	15.99	-0.06	-0.12	-49.26
62.13	0.0442	-64.87	16.07	-0.06	-0.12	-48.98
62.14	0.0437	-64.68	16.16	-0.06	-0.12	-48.70
62.15	0.0433	-64.49	16.25	-0.06	-0.12	-48.43
62.16	0.0428	-64.30	16.33	-0.06	-0.12	-48.15
62.17	0.0424	-64.11	16.42	-0.06	-0.12	-47.87
62.18	0.0419	-63.92	16.51	-0.06	-0.12	-47.59
62.19	0.0415	-63.73	16.59	-0.06	-0.12	-47.31
62.20	0.0410	-63.54	16.68	-0.06	-0.12	-47.04
62.21	0.0406	-63.35	16.77	-0.06	-0.12	-46.76
62.22	0.0401	-63.16	16.85	-0.06	-0.12	-46.48
62.23	0.0397	-62.97	16.94	-0.06	-0.12	-46.20
62.24	0.0392	-62.78	17.03	-0.06	-0.12	-45.93
62.25	0.0388	-62.59	17.11	-0.06	-0.12	-45.65
62.26	0.0383	-62.40	17.20	-0.06	-0.12	-45.37
62.27	0.0379	-62.20	17.29	-0.06	-0.12	-45.09
62.28	0.0374	-62.01	17.37	-0.06	-0.12	-44.81
62.29	0.0370	-61.82	17.46	-0.05	-0.12	-44.54
62.30	0.0365	-61.63	17.54	-0.05	-0.11	-44.26
62.31	0.0361	-61.44	17.63	-0.05	-0.11	-43.98
62.32	0.0356	-61.06	17.65	-0.05	-0.11	-43.58
62.33	0.0349	-60.41	17.58	-0.05	-0.11	-43.00
62.34	0.0342	-59.69	17.50	-0.05	-0.11	-42.35
62.35	0.0335	-58.96	17.40	-0.05	-0.11	-41.72
62.36	0.0328	-58.23	17.31	-0.05	-0.11	-41.08
62.37	0.0321	-57.43	17.19	-0.05	-0.11	-40.40
62.38	0.0307	-55.00	16.48	-0.05	-0.10	-38.67
62.39	0.0282	-50.56	15.16	-0.04	-0.09	-35.54
62.40	0.0252	-45.22	13.57	-0.04	-0.08	-31.77
62.41	0.0224	-40.20	12.07	-0.03	-0.07	-28.24
62.42	0.0199	-35.80	10.75	-0.03	-0.07	-25.15
62.43	0.0176	-31.59	9.48	-0.03	-0.06	-22.19
62.44	0.0152	-27.20	8.16	-0.02	-0.05	-19.11

62.45	0.0126	-22.62	6.79	-0.02	-0.04	-15.90
62.46	0.0100	-18.01	5.41	-0.02	-0.03	-12.66
62.47	0.0075	-13.48	4.05	-0.01	-0.03	-9.47
62.48	0.0050	-9.00	2.70	-0.01	-0.02	-6.33
62.49	0.0025	-4.52	1.36	0.00	-0.01	-3.18
62.50	0.0000	0.00	0.00	0.00	0.00	-0.01
62.51	-0.0025	-1.31	4.38	-0.01	0.00	3.06
62.52	-0.0050	-2.69	8.97	-0.02	-0.01	6.26
62.53	-0.0075	-4.06	13.55	-0.03	-0.01	9.44
62.54	-0.0101	-5.42	18.07	-0.03	-0.02	12.60
62.55	-0.0126	-6.77	22.55	-0.04	-0.02	15.73
62.56	-0.0151	-8.12	27.05	-0.05	-0.02	18.86
62.57	-0.0176	-9.47	31.56	-0.06	-0.03	22.00
62.58	-0.0201	-10.83	36.08	-0.07	-0.03	25.15
62.59	-0.0226	-12.18	40.59	-0.08	-0.03	28.30
62.60	-0.0251	-13.53	45.10	-0.08	-0.04	31.45
62.61	-0.0276	-14.89	49.61	-0.09	-0.04	34.59
62.62	-0.0301	-16.24	54.12	-0.10	-0.05	37.73
62.63	-0.0320	-16.99	56.99	-0.11	-0.05	39.84
62.64	-0.0328	-17.24	58.15	-0.11	-0.05	40.75
62.65	-0.0334	-17.38	58.87	-0.11	-0.05	41.33
62.66	-0.0342	-17.48	59.64	-0.11	-0.05	42.00
62.67	-0.0349	-17.58	60.39	-0.11	-0.05	42.65
62.68	-0.0355	-17.65	61.05	-0.11	-0.05	43.24
62.69	-0.0361	-17.60	61.37	-0.11	-0.05	43.60
62.70	-0.0365	-17.53	61.58	-0.11	-0.05	43.89
62.71	-0.0370	-17.45	61.78	-0.12	-0.05	44.17
62.72	-0.0374	-17.36	61.97	-0.12	-0.06	44.45
62.73	-0.0379	-17.27	62.16	-0.12	-0.06	44.72
62.74	-0.0383	-17.19	62.35	-0.12	-0.06	45.00
62.75	-0.0388	-17.10	62.54	-0.12	-0.06	45.27
62.76	-0.0392	-17.01	62.73	-0.12	-0.06	45.55
62.77	-0.0397	-16.93	62.92	-0.12	-0.06	45.82
62.78	-0.0401	-16.84	63.11	-0.12	-0.06	46.10
62.79	-0.0406	-16.75	63.31	-0.12	-0.06	46.38
62.80	-0.0410	-16.67	63.50	-0.12	-0.06	46.65
62.81	-0.0415	-16.58	63.69	-0.12	-0.06	46.93
62.82	-0.0419	-16.49	63.88	-0.12	-0.06	47.20
62.83	-0.0424	-16.41	64.07	-0.12	-0.06	47.48
62.84	-0.0428	-16.32	64.26	-0.12	-0.06	47.76
62.85	-0.0433	-16.23	64.45	-0.12	-0.06	48.03
62.86	-0.0437	-16.15	64.64	-0.12	-0.06	48.31
62.87	-0.0442	-16.06	64.83	-0.12	-0.06	48.58
62.88	-0.0446	-15.97	65.02	-0.12	-0.06	48.86
62.89	-0.0451	-15.89	65.21	-0.12	-0.06	49.13
62.90	-0.0455	-15.80	65.40	-0.12	-0.06	49.41
62.91	-0.0460	-15.71	65.59	-0.12	-0.06	49.69
62.92	-0.0464	-15.63	65.78	-0.13	-0.06	49.96
62.93	-0.0469	-15.54	65.97	-0.13	-0.07	50.24
62.94	-0.0473	-15.45	66.16	-0.13	-0.07	50.51
62.95	-0.0478	-15.37	66.35	-0.13	-0.07	50.79
62.96	-0.0482	-15.28	66.54	-0.13	-0.07	51.06
62.97	-0.0487	-15.19	66.73	-0.13	-0.07	51.34
62.98	-0.0491	-15.11	66.92	-0.13	-0.07	51.62
62.99	-0.0496	-15.02	67.11	-0.13	-0.07	51.89
63.00	-0.0502	-15.10	67.76	-0.13	-0.07	52.46
63.01	-0.0500	-15.09	67.58	-0.13	-0.07	52.29

63.02	-0.0493	-15.27	67.33	-0.13	-0.07	51.87
63.03	-0.0489	-15.35	67.16	-0.13	-0.07	51.62
63.04	-0.0485	-15.41	66.97	-0.13	-0.07	51.36
63.05	-0.0480	-15.51	66.78	-0.13	-0.07	51.07
63.06	-0.0475	-15.60	66.58	-0.13	-0.07	50.79
63.07	-0.0471	-15.68	66.39	-0.13	-0.07	50.52
63.08	-0.0466	-15.77	66.20	-0.13	-0.07	50.24
63.09	-0.0462	-15.85	66.01	-0.13	-0.06	49.97
63.10	-0.0457	-15.94	65.82	-0.13	-0.06	49.69
63.11	-0.0453	-16.03	65.63	-0.12	-0.06	49.42
63.12	-0.0448	-16.11	65.44	-0.12	-0.06	49.14
63.13	-0.0444	-16.20	65.25	-0.12	-0.06	48.86
63.14	-0.0439	-16.29	65.06	-0.12	-0.06	48.59
63.15	-0.0435	-16.37	64.87	-0.12	-0.06	48.31
63.16	-0.0430	-16.46	64.68	-0.12	-0.06	48.04
63.17	-0.0426	-16.55	64.49	-0.12	-0.06	47.76
63.18	-0.0421	-16.63	64.30	-0.12	-0.06	47.49
63.19	-0.0417	-16.72	64.11	-0.12	-0.06	47.21
63.20	-0.0412	-16.81	63.92	-0.12	-0.06	46.93
63.21	-0.0408	-16.89	63.73	-0.12	-0.06	46.66
63.22	-0.0403	-16.98	63.54	-0.12	-0.06	46.38
63.23	-0.0399	-17.07	63.35	-0.12	-0.06	46.11
63.24	-0.0394	-17.15	63.16	-0.12	-0.06	45.83
63.25	-0.0390	-17.24	62.97	-0.12	-0.06	45.56
63.26	-0.0385	-17.33	62.78	-0.12	-0.06	45.28
63.27	-0.0381	-17.41	62.59	-0.12	-0.06	45.00
63.28	-0.0376	-17.50	62.40	-0.12	-0.06	44.73
63.29	-0.0372	-17.59	62.21	-0.12	-0.05	44.45
63.30	-0.0367	-17.67	62.02	-0.12	-0.05	44.18
63.31	-0.0363	-17.76	61.83	-0.12	-0.05	43.90
63.32	-0.0357	-17.76	61.41	-0.11	-0.05	43.48
63.33	-0.0351	-17.69	60.75	-0.11	-0.05	42.89
63.34	-0.0343	-17.61	60.02	-0.11	-0.05	42.25
63.35	-0.0337	-17.52	59.29	-0.11	-0.05	41.62
63.36	-0.0330	-17.42	58.56	-0.11	-0.05	40.98
63.37	-0.0322	-17.25	57.62	-0.11	-0.05	40.22
63.38	-0.0307	-16.49	55.01	-0.10	-0.05	38.38
63.39	-0.0281	-15.13	50.49	-0.09	-0.04	35.22
63.40	-0.0252	-13.55	45.17	-0.08	-0.04	31.50
63.41	-0.0224	-12.07	40.21	-0.07	-0.03	28.03
63.42	-0.0200	-10.75	35.83	-0.07	-0.03	24.98
63.43	-0.0176	-9.48	31.60	-0.06	-0.03	22.03
63.44	-0.0151	-8.16	27.19	-0.05	-0.02	18.96
63.45	-0.0126	-6.78	22.61	-0.04	-0.02	15.77
63.46	-0.0100	-5.41	18.01	-0.03	-0.02	12.56
63.47	-0.0075	-4.05	13.48	-0.03	-0.01	9.40
63.48	-0.0050	-2.70	9.01	-0.02	-0.01	6.28
63.49	-0.0025	-1.36	4.52	-0.01	0.00	3.15
63.50	0.0000	0.00	0.00	0.00	0.00	-0.01
63.51	0.0025	-4.39	1.31	0.00	-0.01	-3.09
63.52	0.0050	-8.97	2.69	-0.01	-0.02	-6.30
63.53	0.0075	-13.54	4.06	-0.01	-0.03	-9.52
63.54	0.0101	-18.07	5.42	-0.02	-0.03	-12.70
63.55	0.0126	-22.55	6.77	-0.02	-0.04	-15.85
63.56	0.0151	-27.05	8.12	-0.02	-0.05	-19.00
63.57	0.0176	-31.56	9.47	-0.03	-0.06	-22.17
63.58	0.0201	-36.08	10.83	-0.03	-0.07	-25.35

63.59	0.0226	-40.59	12.18	-0.03	-0.08	-28.52
63.60	0.0251	-45.10	13.53	-0.04	-0.08	-31.69
63.61	0.0276	-49.61	14.89	-0.04	-0.09	-34.86
63.62	0.0301	-54.12	16.24	-0.05	-0.10	-38.02
63.63	0.0320	-57.01	17.00	-0.05	-0.11	-40.16
63.64	0.0329	-58.18	17.26	-0.05	-0.11	-41.09
63.65	0.0335	-58.91	17.39	-0.05	-0.11	-41.67
63.66	0.0342	-59.67	17.49	-0.05	-0.11	-42.34
63.67	0.0349	-60.43	17.59	-0.05	-0.11	-43.00
63.68	0.0356	-61.09	17.66	-0.05	-0.11	-43.60
63.69	0.0361	-61.41	17.61	-0.05	-0.11	-43.97
63.70	0.0365	-61.62	17.54	-0.05	-0.11	-44.25
63.71	0.0370	-61.82	17.46	-0.05	-0.12	-44.53
63.72	0.0374	-62.01	17.37	-0.06	-0.12	-44.82
63.73	0.0379	-62.20	17.29	-0.06	-0.12	-45.09
63.74	0.0383	-62.39	17.20	-0.06	-0.12	-45.37
63.75	0.0388	-62.59	17.11	-0.06	-0.12	-45.65
63.76	0.0392	-62.78	17.03	-0.06	-0.12	-45.93
63.77	0.0397	-62.97	16.94	-0.06	-0.12	-46.20
63.78	0.0401	-63.16	16.85	-0.06	-0.12	-46.48
63.79	0.0406	-63.35	16.77	-0.06	-0.12	-46.76
63.80	0.0410	-63.54	16.68	-0.06	-0.12	-47.04
63.81	0.0415	-63.73	16.59	-0.06	-0.12	-47.31
63.82	0.0419	-63.92	16.51	-0.06	-0.12	-47.59
63.83	0.0424	-64.11	16.42	-0.06	-0.12	-47.87
63.84	0.0428	-64.30	16.33	-0.06	-0.12	-48.15
63.85	0.0433	-64.49	16.25	-0.06	-0.12	-48.43
63.86	0.0437	-64.68	16.16	-0.06	-0.12	-48.70
63.87	0.0442	-64.87	16.07	-0.06	-0.12	-48.98
63.88	0.0446	-65.06	15.99	-0.06	-0.12	-49.26
63.89	0.0451	-65.25	15.90	-0.06	-0.12	-49.54
63.90	0.0455	-65.44	15.81	-0.06	-0.12	-49.81
63.91	0.0460	-65.63	15.73	-0.06	-0.12	-50.09
63.92	0.0464	-65.82	15.64	-0.06	-0.13	-50.37
63.93	0.0469	-66.01	15.55	-0.07	-0.13	-50.65
63.94	0.0473	-66.20	15.47	-0.07	-0.13	-50.92
63.95	0.0478	-66.39	15.38	-0.07	-0.13	-51.20
63.96	0.0482	-66.58	15.29	-0.07	-0.13	-51.48
63.97	0.0487	-66.77	15.21	-0.07	-0.13	-51.76
63.98	0.0491	-66.96	15.12	-0.07	-0.13	-52.04
63.99	0.0496	-67.15	15.03	-0.07	-0.13	-52.31
64.00	0.0502	-67.78	15.11	-0.07	-0.13	-52.87
64.01	0.0500	-67.59	15.10	-0.07	-0.13	-52.69
64.02	0.0492	-67.33	15.28	-0.07	-0.13	-52.25
64.03	0.0488	-67.14	15.35	-0.07	-0.13	-51.99
64.04	0.0483	-66.95	15.44	-0.07	-0.13	-51.70
64.05	0.0479	-66.74	15.54	-0.07	-0.13	-51.40
64.06	0.0474	-66.54	15.63	-0.07	-0.13	-51.11
64.07	0.0469	-66.35	15.72	-0.07	-0.13	-50.82
64.08	0.0465	-66.15	15.81	-0.07	-0.13	-50.53
64.09	0.0460	-65.95	15.90	-0.06	-0.13	-50.23
64.10	0.0455	-65.75	15.99	-0.06	-0.12	-49.94
64.11	0.0450	-65.55	16.08	-0.06	-0.12	-49.65
64.12	0.0446	-65.35	16.17	-0.06	-0.12	-49.36
64.13	0.0441	-65.15	16.26	-0.06	-0.12	-49.07
64.14	0.0436	-64.95	16.36	-0.06	-0.12	-48.77
64.15	0.0431	-64.75	16.45	-0.06	-0.12	-48.48

64.16	0.0427	-64.55	16.54	-0.06	-0.12	-48.19
64.17	0.0422	-64.35	16.63	-0.06	-0.12	-47.90
64.18	0.0417	-64.15	16.72	-0.06	-0.12	-47.61
64.19	0.0412	-63.95	16.81	-0.06	-0.12	-47.31
64.20	0.0408	-63.75	16.90	-0.06	-0.12	-47.02
64.21	0.0403	-63.55	16.99	-0.06	-0.12	-46.73
64.22	0.0398	-63.35	17.08	-0.06	-0.12	-46.44
64.23	0.0393	-63.15	17.18	-0.06	-0.12	-46.15
64.24	0.0389	-62.95	17.27	-0.06	-0.12	-45.86
64.25	0.0384	-62.75	17.36	-0.06	-0.12	-45.56
64.26	0.0379	-62.55	17.45	-0.06	-0.12	-45.27
64.27	0.0375	-62.35	17.54	-0.06	-0.12	-44.98
64.28	0.0370	-62.15	17.63	-0.05	-0.12	-44.69
64.29	0.0365	-61.95	17.72	-0.05	-0.12	-44.39
64.30	0.0360	-61.67	17.79	-0.05	-0.11	-44.06
64.31	0.0354	-61.06	17.73	-0.05	-0.11	-43.49
64.32	0.0346	-60.30	17.64	-0.05	-0.11	-42.82
64.33	0.0339	-59.53	17.55	-0.05	-0.11	-42.14
64.34	0.0331	-58.77	17.45	-0.05	-0.11	-41.48
64.35	0.0324	-57.98	17.34	-0.05	-0.11	-40.79
64.36	0.0313	-56.08	16.81	-0.05	-0.10	-39.42
64.37	0.0288	-51.60	15.46	-0.04	-0.10	-36.27
64.38	0.0254	-45.67	13.70	-0.04	-0.09	-32.10
64.39	0.0223	-40.08	12.03	-0.03	-0.07	-28.15
64.40	0.0197	-35.40	10.63	-0.03	-0.07	-24.86
64.41	0.0173	-31.09	9.33	-0.03	-0.06	-21.84
64.42	0.0148	-26.57	7.97	-0.02	-0.05	-18.67
64.43	0.0121	-21.76	6.53	-0.02	-0.04	-15.29
64.44	0.0094	-16.87	5.06	-0.01	-0.03	-11.85
64.45	0.0067	-12.08	3.62	-0.01	-0.02	-8.48
64.46	0.0041	-7.38	2.21	-0.01	-0.01	-5.18
64.47	0.0015	-2.68	0.80	0.00	0.00	-1.88
64.48	-0.0011	-0.57	1.92	0.00	0.00	1.35
64.49	-0.0037	-2.01	6.69	-0.01	-0.01	4.66
64.50	-0.0064	-3.46	11.55	-0.02	-0.01	8.06
64.51	-0.0091	-4.91	16.36	-0.03	-0.01	11.41
64.52	-0.0117	-6.32	21.08	-0.04	-0.02	14.70
64.53	-0.0144	-7.73	25.77	-0.05	-0.02	17.97
64.54	-0.0170	-9.15	30.50	-0.06	-0.03	21.26
64.55	-0.0196	-10.58	35.25	-0.07	-0.03	24.58
64.56	-0.0223	-12.00	40.01	-0.07	-0.03	27.89
64.57	-0.0249	-13.43	44.75	-0.08	-0.04	31.20
64.58	-0.0276	-14.85	49.49	-0.09	-0.04	34.50
64.59	-0.0302	-16.27	54.22	-0.10	-0.05	37.80
64.60	-0.0325	-17.28	57.98	-0.11	-0.05	40.54
64.61	-0.0332	-17.43	58.76	-0.11	-0.05	41.17
64.62	-0.0337	-17.53	59.34	-0.11	-0.05	41.65
64.63	-0.0345	-17.63	60.19	-0.11	-0.05	42.40
64.64	-0.0353	-17.73	60.98	-0.11	-0.05	43.09
64.65	-0.0359	-17.77	61.57	-0.11	-0.05	43.63
64.66	-0.0364	-17.71	61.87	-0.12	-0.05	43.99
64.67	-0.0369	-17.63	62.09	-0.12	-0.05	44.29
64.68	-0.0374	-17.55	62.30	-0.12	-0.06	44.58
64.69	-0.0379	-17.45	62.50	-0.12	-0.06	44.88
64.70	-0.0383	-17.36	62.70	-0.12	-0.06	45.17
64.71	-0.0388	-17.27	62.90	-0.12	-0.06	45.46
64.72	-0.0393	-17.18	63.10	-0.12	-0.06	45.75

64.73	-0.0398	-17.09	63.30	-0.12	-0.06	46.04
64.74	-0.0402	-17.00	63.50	-0.12	-0.06	46.33
64.75	-0.0407	-16.91	63.70	-0.12	-0.06	46.62
64.76	-0.0412	-16.82	63.90	-0.12	-0.06	46.91
64.77	-0.0416	-16.73	64.10	-0.12	-0.06	47.20
64.78	-0.0421	-16.63	64.30	-0.12	-0.06	47.49
64.79	-0.0426	-16.54	64.50	-0.12	-0.06	47.78
64.80	-0.0431	-16.45	64.70	-0.12	-0.06	48.07
64.81	-0.0435	-16.36	64.90	-0.12	-0.06	48.36
64.82	-0.0440	-16.27	65.10	-0.12	-0.06	48.65
64.83	-0.0445	-16.18	65.30	-0.12	-0.06	48.93
64.84	-0.0450	-16.09	65.50	-0.12	-0.06	49.23
64.85	-0.0454	-16.00	65.70	-0.12	-0.06	49.52
64.86	-0.0459	-15.91	65.90	-0.13	-0.06	49.80
64.87	-0.0464	-15.81	66.10	-0.13	-0.06	50.10
64.88	-0.0469	-15.72	66.30	-0.13	-0.07	50.39
64.89	-0.0473	-15.63	66.50	-0.13	-0.07	50.68
64.90	-0.0478	-15.54	66.70	-0.13	-0.07	50.96
64.91	-0.0483	-15.45	66.90	-0.13	-0.07	51.26
64.92	-0.0487	-15.36	67.10	-0.13	-0.07	51.55
64.93	-0.0492	-15.27	67.30	-0.13	-0.07	51.83
64.94	-0.0497	-15.18	67.50	-0.13	-0.07	52.13
64.95	-0.0502	-15.12	67.78	-0.13	-0.07	52.47
64.96	-0.0514	-15.63	69.65	-0.13	-0.07	53.82
64.97	-0.0534	-16.63	73.17	-0.14	-0.07	56.32
64.98	-0.0558	-17.78	77.20	-0.15	-0.08	59.20
64.99	-0.0580	-18.83	80.85	-0.15	-0.08	61.79
65.00	-0.0599	-19.78	84.16	-0.16	-0.08	64.13
65.01	-0.0598	-19.74	84.03	-0.16	-0.08	64.05
65.02	-0.0588	-20.00	83.70	-0.16	-0.08	63.45
65.03	-0.0584	-20.09	83.54	-0.16	-0.08	63.20
65.04	-0.0579	-20.14	83.31	-0.16	-0.08	62.93
65.05	-0.0574	-20.27	83.11	-0.16	-0.08	62.60
65.06	-0.0569	-20.36	82.89	-0.16	-0.08	62.30
65.07	-0.0564	-20.45	82.69	-0.16	-0.08	62.00
65.08	-0.0559	-20.55	82.48	-0.16	-0.08	61.69
65.09	-0.0554	-20.64	82.27	-0.16	-0.08	61.39
65.10	-0.0549	-20.74	82.06	-0.16	-0.08	61.09
65.11	-0.0544	-20.83	81.85	-0.15	-0.08	60.78
65.12	-0.0539	-20.93	81.64	-0.15	-0.08	60.48
65.13	-0.0534	-21.02	81.43	-0.15	-0.08	60.18
65.14	-0.0529	-21.12	81.22	-0.15	-0.08	59.87
65.15	-0.0524	-21.22	81.01	-0.15	-0.08	59.57
65.16	-0.0519	-21.31	80.80	-0.15	-0.07	59.26
65.17	-0.0514	-21.41	80.59	-0.15	-0.07	58.96
65.18	-0.0510	-21.50	80.38	-0.15	-0.07	58.65
65.19	-0.0505	-21.60	80.17	-0.15	-0.07	58.35
65.20	-0.0500	-21.69	79.96	-0.15	-0.07	58.05
65.21	-0.0495	-21.79	79.75	-0.15	-0.07	57.74
65.22	-0.0490	-21.88	79.54	-0.15	-0.07	57.44
65.23	-0.0485	-21.98	79.33	-0.15	-0.07	57.13
65.24	-0.0480	-22.07	79.12	-0.15	-0.07	56.83
65.25	-0.0475	-22.17	78.91	-0.15	-0.07	56.53
65.26	-0.0470	-22.27	78.70	-0.15	-0.07	56.22
65.27	-0.0465	-22.36	78.49	-0.15	-0.07	55.92
65.28	-0.0460	-22.46	78.28	-0.15	-0.07	55.61
65.29	-0.0455	-22.55	78.07	-0.15	-0.07	55.30

65.30	-0.0449	-22.60	77.73	-0.14	-0.07	54.92
65.31	-0.0443	-22.54	77.07	-0.14	-0.07	54.32
65.32	-0.0435	-22.44	76.26	-0.14	-0.07	53.61
65.33	-0.0427	-22.34	75.46	-0.14	-0.06	52.91
65.34	-0.0419	-22.24	74.65	-0.14	-0.06	52.21
65.35	-0.0410	-22.03	73.56	-0.14	-0.06	51.33
65.36	-0.0393	-21.16	70.60	-0.13	-0.06	49.25
65.37	-0.0365	-19.66	65.57	-0.12	-0.06	45.73
65.38	-0.0333	-17.92	59.73	-0.11	-0.05	41.64
65.39	-0.0302	-16.29	54.28	-0.10	-0.05	37.84
65.40	-0.0275	-14.84	49.45	-0.09	-0.04	34.48
65.41	-0.0249	-13.44	44.79	-0.08	-0.04	31.23
65.42	-0.0222	-11.98	39.92	-0.07	-0.03	27.84
65.43	-0.0194	-10.46	34.87	-0.06	-0.03	24.31
65.44	-0.0166	-8.94	29.80	-0.06	-0.03	20.78
65.45	-0.0138	-7.45	24.81	-0.05	-0.02	17.30
65.46	-0.0111	-5.96	19.87	-0.04	-0.02	13.86
65.47	-0.0083	-4.48	14.93	-0.03	-0.01	10.41
65.48	-0.0055	-2.99	9.96	-0.02	-0.01	6.94
65.49	-0.0028	-1.49	4.97	-0.01	0.00	3.47
65.50	0.0000	0.00	0.00	0.00	0.00	0.00
65.51	0.0027	-4.86	1.46	-0.01	-0.01	-3.41
65.52	0.0055	-9.88	2.97	-0.01	-0.02	-6.95
65.53	0.0083	-14.95	4.49	-0.01	-0.03	-10.50
65.54	0.0111	-19.94	5.98	-0.02	-0.04	-14.01
65.55	0.0139	-24.88	7.46	-0.02	-0.05	-17.48
65.56	0.0166	-29.81	8.95	-0.03	-0.06	-20.95
65.57	0.0194	-34.79	10.44	-0.03	-0.06	-24.44
65.58	0.0222	-39.78	11.94	-0.03	-0.07	-27.95
65.59	0.0249	-44.76	13.43	-0.04	-0.08	-31.45
65.60	0.0277	-49.73	14.92	-0.04	-0.09	-34.94
65.61	0.0305	-54.69	16.41	-0.05	-0.10	-38.43
65.62	0.0324	-57.61	17.15	-0.05	-0.11	-40.61
65.63	0.0332	-58.77	17.40	-0.05	-0.11	-41.53
65.64	0.0339	-59.57	17.55	-0.05	-0.11	-42.18
65.65	0.0347	-60.42	17.66	-0.05	-0.11	-42.92
65.66	0.0355	-61.25	17.76	-0.05	-0.11	-43.65
65.67	0.0361	-61.72	17.75	-0.05	-0.11	-44.13
65.68	0.0367	-61.99	17.68	-0.05	-0.12	-44.48
65.69	0.0371	-62.21	17.60	-0.05	-0.12	-44.79
65.70	0.0377	-62.43	17.50	-0.06	-0.12	-45.10
65.71	0.0381	-62.64	17.41	-0.06	-0.12	-45.41
65.72	0.0386	-62.85	17.31	-0.06	-0.12	-45.71
65.73	0.0391	-63.06	17.22	-0.06	-0.12	-46.02
65.74	0.0396	-63.27	17.12	-0.06	-0.12	-46.32
65.75	0.0401	-63.48	17.03	-0.06	-0.12	-46.63
65.76	0.0406	-63.69	16.93	-0.06	-0.12	-46.94
65.77	0.0411	-63.90	16.83	-0.06	-0.12	-47.24
65.78	0.0416	-64.11	16.74	-0.06	-0.12	-47.55
65.79	0.0421	-64.32	16.64	-0.06	-0.12	-47.86
65.80	0.0426	-64.53	16.55	-0.06	-0.12	-48.16
65.81	0.0431	-64.74	16.45	-0.06	-0.12	-48.47
65.82	0.0436	-64.95	16.36	-0.06	-0.12	-48.77
65.83	0.0441	-65.15	16.26	-0.06	-0.12	-49.08
65.84	0.0446	-65.36	16.17	-0.06	-0.12	-49.39
65.85	0.0451	-65.57	16.07	-0.06	-0.12	-49.69
65.86	0.0456	-65.78	15.97	-0.06	-0.13	-50.00

65.87	0.0461	-65.99	15.88	-0.06	-0.13	-50.30
65.88	0.0466	-66.20	15.78	-0.07	-0.13	-50.61
65.89	0.0471	-66.41	15.69	-0.07	-0.13	-50.92
65.90	0.0476	-66.62	15.59	-0.07	-0.13	-51.22
65.91	0.0481	-66.83	15.50	-0.07	-0.13	-51.53
65.92	0.0486	-67.04	15.40	-0.07	-0.13	-51.84
65.93	0.0491	-67.25	15.31	-0.07	-0.13	-52.14
65.94	0.0496	-67.46	15.21	-0.07	-0.13	-52.45
65.95	0.0501	-67.67	15.12	-0.07	-0.13	-52.75
65.96	0.0511	-69.25	15.52	-0.07	-0.13	-53.93
65.97	0.0531	-72.60	16.47	-0.07	-0.14	-56.34
65.98	0.0556	-76.75	17.65	-0.08	-0.15	-59.32
65.99	0.0579	-80.67	18.77	-0.08	-0.15	-62.13
66.00	0.0599	-84.20	19.79	-0.08	-0.16	-64.65
66.01	0.0598	-84.07	19.75	-0.08	-0.16	-64.57
66.02	0.0588	-83.74	20.02	-0.08	-0.16	-63.96
66.03	0.0584	-83.58	20.11	-0.08	-0.16	-63.71
66.04	0.0580	-83.36	20.15	-0.08	-0.16	-63.44
66.05	0.0574	-83.15	20.28	-0.08	-0.16	-63.11
66.06	0.0569	-82.93	20.37	-0.08	-0.16	-62.80
66.07	0.0564	-82.73	20.46	-0.08	-0.16	-62.50
66.08	0.0559	-82.52	20.56	-0.08	-0.16	-62.19
66.09	0.0554	-82.31	20.66	-0.08	-0.16	-61.89
66.10	0.0549	-82.10	20.75	-0.08	-0.16	-61.58
66.11	0.0544	-81.89	20.85	-0.08	-0.15	-61.28
66.12	0.0539	-81.68	20.94	-0.08	-0.15	-60.97
66.13	0.0535	-81.47	21.04	-0.08	-0.15	-60.66
66.14	0.0530	-81.26	21.13	-0.08	-0.15	-60.36
66.15	0.0525	-81.05	21.23	-0.08	-0.15	-60.05
66.16	0.0520	-80.84	21.32	-0.07	-0.15	-59.74
66.17	0.0515	-80.63	21.42	-0.07	-0.15	-59.44
66.18	0.0510	-80.42	21.52	-0.07	-0.15	-59.13
66.19	0.0505	-80.21	21.61	-0.07	-0.15	-58.83
66.20	0.0500	-80.00	21.71	-0.07	-0.15	-58.52
66.21	0.0495	-79.79	21.80	-0.07	-0.15	-58.21
66.22	0.0490	-79.58	21.90	-0.07	-0.15	-57.91
66.23	0.0485	-79.37	21.99	-0.07	-0.15	-57.60
66.24	0.0480	-79.16	22.09	-0.07	-0.15	-57.29
66.25	0.0475	-78.95	22.18	-0.07	-0.15	-56.99
66.26	0.0470	-78.75	22.28	-0.07	-0.15	-56.68
66.27	0.0465	-78.54	22.37	-0.07	-0.15	-56.38
66.28	0.0460	-78.32	22.47	-0.07	-0.15	-56.07
66.29	0.0455	-78.11	22.56	-0.07	-0.15	-55.76
66.30	0.0450	-77.77	22.61	-0.07	-0.14	-55.37
66.31	0.0443	-77.10	22.55	-0.07	-0.14	-54.76
66.32	0.0435	-76.30	22.46	-0.07	-0.14	-54.05
66.33	0.0427	-75.49	22.35	-0.06	-0.14	-53.34
66.34	0.0420	-74.68	22.25	-0.06	-0.14	-52.64
66.35	0.0411	-73.58	22.04	-0.06	-0.14	-51.74
66.36	0.0393	-70.60	21.16	-0.06	-0.13	-49.63
66.37	0.0365	-65.57	19.66	-0.06	-0.12	-46.08
66.38	0.0333	-59.72	17.92	-0.05	-0.11	-41.96
66.39	0.0302	-54.28	16.29	-0.05	-0.10	-38.14
66.40	0.0275	-49.46	14.84	-0.04	-0.09	-34.75
66.41	0.0249	-44.79	13.44	-0.04	-0.08	-31.47
66.42	0.0222	-39.92	11.98	-0.03	-0.07	-28.05
66.43	0.0194	-34.87	10.46	-0.03	-0.06	-24.50

66.44	0.0166	-29.80	8.94	-0.03	-0.06	-20.94
66.45	0.0138	-24.81	7.45	-0.02	-0.05	-17.43
66.46	0.0111	-19.87	5.96	-0.02	-0.04	-13.96
66.47	0.0083	-14.93	4.48	-0.01	-0.03	-10.49
66.48	0.0055	-9.96	2.99	-0.01	-0.02	-7.00
66.49	0.0028	-4.97	1.49	0.00	-0.01	-3.50
66.50	0.0000	0.00	0.00	0.00	0.00	0.00
66.51	-0.0027	-1.46	4.86	-0.01	-0.01	3.38
66.52	-0.0055	-2.97	9.88	-0.02	-0.01	6.89
66.53	-0.0083	-4.49	14.95	-0.03	-0.01	10.42
66.54	-0.0111	-5.98	19.94	-0.04	-0.02	13.90
66.55	-0.0139	-7.46	24.88	-0.05	-0.02	17.34
66.56	-0.0166	-8.95	29.81	-0.06	-0.03	20.79
66.57	-0.0194	-10.44	34.79	-0.06	-0.03	24.25
66.58	-0.0222	-11.94	39.78	-0.07	-0.03	27.73
66.59	-0.0249	-13.43	44.76	-0.08	-0.04	31.21
66.60	-0.0277	-14.92	49.73	-0.09	-0.04	34.67
66.61	-0.0305	-16.41	54.69	-0.10	-0.05	38.13
66.62	-0.0332	-17.90	59.66	-0.11	-0.05	41.60
66.63	-0.0360	-19.40	64.63	-0.12	-0.05	45.06
66.64	-0.0388	-20.89	69.61	-0.13	-0.06	48.53
66.65	-0.0409	-21.85	73.14	-0.14	-0.06	51.09
66.66	-0.0420	-22.17	74.60	-0.14	-0.06	52.23
66.67	-0.0426	-22.34	75.41	-0.14	-0.06	52.86
66.68	-0.0435	-22.45	76.28	-0.14	-0.07	53.62
66.69	-0.0443	-22.55	77.09	-0.14	-0.07	54.33
66.70	-0.0449	-22.59	77.72	-0.14	-0.07	54.91
66.71	-0.0455	-22.53	78.04	-0.15	-0.07	55.29
66.72	-0.0460	-22.45	78.27	-0.15	-0.07	55.61
66.73	-0.0465	-22.36	78.49	-0.15	-0.07	55.92
66.74	-0.0470	-22.26	78.70	-0.15	-0.07	56.22
66.75	-0.0475	-22.17	78.91	-0.15	-0.07	56.53
66.76	-0.0480	-22.07	79.12	-0.15	-0.07	56.83
66.77	-0.0485	-21.98	79.33	-0.15	-0.07	57.13
66.78	-0.0490	-21.88	79.54	-0.15	-0.07	57.44
66.79	-0.0495	-21.79	79.75	-0.15	-0.07	57.74
66.80	-0.0500	-21.69	79.96	-0.15	-0.07	58.05
66.81	-0.0505	-21.60	80.17	-0.15	-0.07	58.35
66.82	-0.0510	-21.50	80.38	-0.15	-0.07	58.65
66.83	-0.0514	-21.41	80.59	-0.15	-0.07	58.96
66.84	-0.0519	-21.31	80.80	-0.15	-0.07	59.26
66.85	-0.0524	-21.22	81.01	-0.15	-0.08	59.57
66.86	-0.0529	-21.12	81.22	-0.15	-0.08	59.87
66.87	-0.0534	-21.02	81.43	-0.15	-0.08	60.18
66.88	-0.0539	-20.93	81.64	-0.15	-0.08	60.48
66.89	-0.0544	-20.83	81.85	-0.15	-0.08	60.78
66.90	-0.0549	-20.74	82.06	-0.16	-0.08	61.09
66.91	-0.0554	-20.64	82.27	-0.16	-0.08	61.39
66.92	-0.0559	-20.55	82.48	-0.16	-0.08	61.70
66.93	-0.0564	-20.45	82.69	-0.16	-0.08	62.00
66.94	-0.0569	-20.36	82.90	-0.16	-0.08	62.30
66.95	-0.0574	-20.26	83.11	-0.16	-0.08	62.61
66.96	-0.0579	-20.16	83.32	-0.16	-0.08	62.91
66.97	-0.0584	-20.07	83.53	-0.16	-0.08	63.22
66.98	-0.0589	-19.97	83.74	-0.16	-0.08	63.52
66.99	-0.0594	-19.88	83.95	-0.16	-0.08	63.82
67.00	-0.0601	-19.98	84.68	-0.16	-0.08	64.46

67.01	-0.0598	-19.96	84.49	-0.16	-0.08	64.28
67.02	-0.0591	-20.16	84.21	-0.16	-0.08	63.81
67.03	-0.0586	-20.22	84.01	-0.16	-0.08	63.54
67.04	-0.0581	-20.33	83.80	-0.16	-0.08	63.24
67.05	-0.0576	-20.43	83.60	-0.16	-0.08	62.93
67.06	-0.0571	-20.52	83.39	-0.16	-0.08	62.63
67.07	-0.0566	-20.61	83.18	-0.16	-0.08	62.32
67.08	-0.0561	-20.71	82.97	-0.16	-0.08	62.02
67.09	-0.0557	-20.81	82.76	-0.16	-0.08	61.72
67.10	-0.0552	-20.90	82.55	-0.16	-0.08	61.41
67.11	-0.0547	-21.00	82.34	-0.16	-0.08	61.11
67.12	-0.0542	-21.09	82.13	-0.16	-0.08	60.80
67.13	-0.0537	-21.19	81.92	-0.15	-0.08	60.50
67.14	-0.0532	-21.28	81.71	-0.15	-0.08	60.19
67.15	-0.0527	-21.38	81.50	-0.15	-0.08	59.89
67.16	-0.0522	-21.47	81.29	-0.15	-0.08	59.59
67.17	-0.0517	-21.57	81.08	-0.15	-0.07	59.28
67.18	-0.0512	-21.66	80.87	-0.15	-0.07	58.98
67.19	-0.0507	-21.76	80.66	-0.15	-0.07	58.68
67.20	-0.0502	-21.86	80.45	-0.15	-0.07	58.37
67.21	-0.0497	-21.95	80.24	-0.15	-0.07	58.07
67.22	-0.0492	-22.05	80.03	-0.15	-0.07	57.76
67.23	-0.0487	-22.14	79.82	-0.15	-0.07	57.46
67.24	-0.0482	-22.24	79.61	-0.15	-0.07	57.15
67.25	-0.0477	-22.33	79.40	-0.15	-0.07	56.85
67.26	-0.0472	-22.43	79.19	-0.15	-0.07	56.55
67.27	-0.0467	-22.52	78.98	-0.15	-0.07	56.24
67.28	-0.0462	-22.62	78.77	-0.15	-0.07	55.94
67.29	-0.0457	-22.71	78.56	-0.15	-0.07	55.63
67.30	-0.0452	-22.75	78.18	-0.15	-0.07	55.22
67.31	-0.0445	-22.68	77.49	-0.14	-0.07	54.60
67.32	-0.0437	-22.58	76.69	-0.14	-0.07	53.89
67.33	-0.0429	-22.48	75.88	-0.14	-0.06	53.19
67.34	-0.0421	-22.38	75.07	-0.14	-0.06	52.49
67.35	-0.0412	-22.10	73.80	-0.14	-0.06	51.49
67.36	-0.0393	-21.16	70.61	-0.13	-0.06	49.25
67.37	-0.0365	-19.63	65.48	-0.12	-0.06	45.67
67.38	-0.0332	-17.90	59.67	-0.11	-0.05	41.60
67.39	-0.0302	-16.30	54.29	-0.10	-0.05	37.85
67.40	-0.0276	-14.85	49.49	-0.09	-0.04	34.50
67.41	-0.0250	-13.44	44.80	-0.08	-0.04	31.24
67.42	-0.0222	-11.98	39.92	-0.07	-0.03	27.83
67.43	-0.0194	-10.46	34.86	-0.06	-0.03	24.31
67.44	-0.0166	-8.94	29.80	-0.06	-0.03	20.78
67.45	-0.0138	-7.45	24.81	-0.05	-0.02	17.30
67.46	-0.0111	-5.96	19.88	-0.04	-0.02	13.86
67.47	-0.0083	-4.48	14.93	-0.03	-0.01	10.41
67.48	-0.0055	-2.99	9.96	-0.02	-0.01	6.94
67.49	-0.0028	-1.49	4.97	-0.01	0.00	3.47
67.50	0.0000	0.00	0.00	0.00	0.00	0.00
67.51	0.0027	-4.85	1.46	-0.01	-0.01	-3.41
67.52	0.0055	-9.88	2.97	-0.01	-0.02	-6.95
67.53	0.0083	-14.95	4.49	-0.01	-0.03	-10.50
67.54	0.0111	-19.94	5.98	-0.02	-0.04	-14.01
67.55	0.0139	-24.88	7.46	-0.02	-0.05	-17.48
67.56	0.0166	-29.81	8.95	-0.03	-0.06	-20.95
67.57	0.0194	-34.78	10.44	-0.03	-0.06	-24.44

67.58	0.0222	-39.78	11.94	-0.03	-0.07	-27.95
67.59	0.0249	-44.76	13.43	-0.04	-0.08	-31.45
67.60	0.0277	-49.73	14.92	-0.04	-0.09	-34.94
67.61	0.0305	-54.69	16.41	-0.05	-0.10	-38.43
67.62	0.0332	-59.66	17.90	-0.05	-0.11	-41.92
67.63	0.0360	-64.63	19.40	-0.05	-0.12	-45.41
67.64	0.0388	-69.61	20.89	-0.06	-0.13	-48.91
67.65	0.0409	-73.16	21.86	-0.06	-0.14	-51.50
67.66	0.0420	-74.64	22.18	-0.06	-0.14	-52.66
67.67	0.0427	-75.44	22.36	-0.06	-0.14	-53.29
67.68	0.0435	-76.29	22.46	-0.07	-0.14	-54.04
67.69	0.0443	-77.12	22.56	-0.07	-0.14	-54.77
67.70	0.0450	-77.76	22.61	-0.07	-0.14	-55.36
67.71	0.0455	-78.08	22.55	-0.07	-0.15	-55.74
67.72	0.0460	-78.31	22.47	-0.07	-0.15	-56.06
67.73	0.0465	-78.53	22.37	-0.07	-0.15	-56.37
67.74	0.0470	-78.74	22.28	-0.07	-0.15	-56.68
67.75	0.0475	-78.95	22.18	-0.07	-0.15	-56.99
67.76	0.0480	-79.16	22.09	-0.07	-0.15	-57.29
67.77	0.0485	-79.37	21.99	-0.07	-0.15	-57.60
67.78	0.0490	-79.58	21.90	-0.07	-0.15	-57.91
67.79	0.0495	-79.79	21.80	-0.07	-0.15	-58.21
67.80	0.0500	-80.00	21.71	-0.07	-0.15	-58.52
67.81	0.0505	-80.21	21.61	-0.07	-0.15	-58.83
67.82	0.0510	-80.42	21.52	-0.07	-0.15	-59.13
67.83	0.0515	-80.63	21.42	-0.07	-0.15	-59.44
67.84	0.0520	-80.84	21.32	-0.07	-0.15	-59.74
67.85	0.0525	-81.05	21.23	-0.08	-0.15	-60.05
67.86	0.0530	-81.26	21.13	-0.08	-0.15	-60.36
67.87	0.0535	-81.47	21.04	-0.08	-0.15	-60.66
67.88	0.0539	-81.68	20.94	-0.08	-0.15	-60.97
67.89	0.0544	-81.89	20.85	-0.08	-0.15	-61.28
67.90	0.0549	-82.10	20.75	-0.08	-0.16	-61.58
67.91	0.0554	-82.31	20.66	-0.08	-0.16	-61.89
67.92	0.0559	-82.52	20.56	-0.08	-0.16	-62.19
67.93	0.0564	-82.73	20.46	-0.08	-0.16	-62.50
67.94	0.0569	-82.94	20.37	-0.08	-0.16	-62.81
67.95	0.0574	-83.15	20.27	-0.08	-0.16	-63.11
67.96	0.0579	-83.36	20.18	-0.08	-0.16	-63.42
67.97	0.0584	-83.57	20.08	-0.08	-0.16	-63.73
67.98	0.0589	-83.78	19.99	-0.08	-0.16	-64.03
67.99	0.0594	-83.99	19.89	-0.08	-0.16	-64.34
68.00	0.0601	-84.70	19.98	-0.08	-0.16	-64.97
68.01	0.0598	-84.50	19.97	-0.08	-0.16	-64.77
68.02	0.0590	-84.21	20.17	-0.08	-0.16	-64.28
68.03	0.0586	-84.00	20.24	-0.08	-0.16	-64.00
68.04	0.0581	-83.79	20.35	-0.08	-0.16	-63.68
68.05	0.0575	-83.57	20.45	-0.08	-0.16	-63.35
68.06	0.0570	-83.35	20.55	-0.08	-0.16	-63.04
68.07	0.0565	-83.13	20.65	-0.08	-0.16	-62.72
68.08	0.0560	-82.91	20.75	-0.08	-0.16	-62.39
68.09	0.0555	-82.69	20.85	-0.08	-0.16	-62.08
68.10	0.0549	-82.47	20.95	-0.08	-0.16	-61.76
68.11	0.0544	-82.25	21.05	-0.08	-0.16	-61.43
68.12	0.0539	-82.03	21.15	-0.08	-0.15	-61.12
68.13	0.0534	-81.81	21.25	-0.08	-0.15	-60.80
68.14	0.0529	-81.60	21.35	-0.08	-0.15	-60.47

68.15	0.0523	-81.38	21.45	-0.08	-0.15	-60.16
68.16	0.0518	-81.16	21.55	-0.07	-0.15	-59.83
68.17	0.0513	-80.94	21.65	-0.07	-0.15	-59.51
68.18	0.0508	-80.72	21.75	-0.07	-0.15	-59.19
68.19	0.0503	-80.50	21.85	-0.07	-0.15	-58.87
68.20	0.0498	-80.28	21.95	-0.07	-0.15	-58.56
68.21	0.0492	-80.06	22.05	-0.07	-0.15	-58.23
68.22	0.0487	-79.84	22.15	-0.07	-0.15	-57.91
68.23	0.0482	-79.62	22.25	-0.07	-0.15	-57.59
68.24	0.0477	-79.40	22.35	-0.07	-0.15	-57.27
68.25	0.0472	-79.18	22.45	-0.07	-0.15	-56.95
68.26	0.0466	-78.96	22.55	-0.07	-0.15	-56.63
68.27	0.0461	-78.74	22.65	-0.07	-0.15	-56.31
68.28	0.0456	-78.52	22.74	-0.07	-0.15	-55.99
68.29	0.0450	-78.00	22.74	-0.07	-0.15	-55.47
68.30	0.0442	-77.22	22.65	-0.07	-0.14	-54.78
68.31	0.0434	-76.38	22.55	-0.06	-0.14	-54.03
68.32	0.0426	-75.53	22.44	-0.06	-0.14	-53.30
68.33	0.0418	-74.67	22.33	-0.06	-0.14	-52.55
68.34	0.0403	-72.35	21.68	-0.06	-0.13	-50.87
68.35	0.0378	-67.78	20.32	-0.06	-0.13	-47.65
68.36	0.0345	-61.86	18.56	-0.05	-0.11	-43.47
68.37	0.0312	-55.98	16.80	-0.05	-0.10	-39.33
68.38	0.0283	-50.74	15.23	-0.04	-0.09	-35.65
68.39	0.0255	-45.84	13.76	-0.04	-0.09	-32.21
68.40	0.0227	-40.83	12.25	-0.03	-0.08	-28.69
68.41	0.0198	-35.61	10.68	-0.03	-0.07	-25.02
68.42	0.0169	-30.30	9.09	-0.03	-0.06	-21.29
68.43	0.0140	-25.06	7.52	-0.02	-0.05	-17.61
68.44	0.0111	-19.88	5.97	-0.02	-0.04	-13.97
68.45	0.0082	-14.72	4.42	-0.01	-0.03	-10.34
68.46	0.0053	-9.53	2.86	-0.01	-0.02	-6.70
68.47	0.0024	-4.32	1.30	0.00	-0.01	-3.04
68.48	-0.0005	-0.21	0.74	0.00	0.00	0.52
68.49	-0.0033	-1.79	5.96	-0.01	-0.01	4.15
68.50	-0.0063	-3.37	11.24	-0.02	-0.01	7.83
68.51	-0.0092	-4.96	16.52	-0.03	-0.01	11.52
68.52	-0.0121	-6.52	21.71	-0.04	-0.02	15.14
68.53	-0.0150	-8.06	26.86	-0.05	-0.02	18.73
68.54	-0.0178	-9.61	32.03	-0.06	-0.03	22.33
68.55	-0.0207	-11.18	37.24	-0.07	-0.03	25.97
68.56	-0.0237	-12.74	42.46	-0.08	-0.04	29.61
68.57	-0.0265	-14.30	47.67	-0.09	-0.04	33.24
68.58	-0.0294	-15.86	52.86	-0.10	-0.04	36.86
68.59	-0.0323	-17.42	58.05	-0.11	-0.05	40.47
68.60	-0.0352	-18.98	63.25	-0.12	-0.05	44.10
68.61	-0.0381	-20.54	68.45	-0.13	-0.06	47.72
68.62	-0.0407	-21.85	72.97	-0.14	-0.06	50.92
68.63	-0.0422	-22.27	74.91	-0.14	-0.06	52.44
68.64	-0.0428	-22.48	75.75	-0.14	-0.06	53.07
68.65	-0.0436	-22.58	76.65	-0.14	-0.07	53.86
68.66	-0.0445	-22.69	77.51	-0.14	-0.07	54.61
68.67	-0.0452	-22.75	78.20	-0.15	-0.07	55.24
68.68	-0.0458	-22.69	78.54	-0.15	-0.07	55.64
68.69	-0.0463	-22.60	78.79	-0.15	-0.07	55.97
68.70	-0.0468	-22.51	79.02	-0.15	-0.07	56.29
68.71	-0.0473	-22.41	79.24	-0.15	-0.07	56.61

68.72	-0.0478	-22.31	79.46	-0.15	-0.07	56.93
68.73	-0.0484	-22.21	79.68	-0.15	-0.07	57.25
68.74	-0.0489	-22.11	79.90	-0.15	-0.07	57.57
68.75	-0.0494	-22.01	80.12	-0.15	-0.07	57.89
68.76	-0.0499	-21.91	80.33	-0.15	-0.07	58.20
68.77	-0.0504	-21.81	80.55	-0.15	-0.07	58.52
68.78	-0.0510	-21.71	80.77	-0.15	-0.07	58.84
68.79	-0.0515	-21.61	80.99	-0.15	-0.07	59.16
68.80	-0.0520	-21.51	81.21	-0.15	-0.07	59.47
68.81	-0.0525	-21.41	81.43	-0.15	-0.08	59.79
68.82	-0.0530	-21.31	81.65	-0.15	-0.08	60.11
68.83	-0.0535	-21.21	81.87	-0.15	-0.08	60.43
68.84	-0.0541	-21.11	82.09	-0.16	-0.08	60.75
68.85	-0.0546	-21.01	82.31	-0.16	-0.08	61.06
68.86	-0.0551	-20.91	82.53	-0.16	-0.08	61.38
68.87	-0.0556	-20.81	82.75	-0.16	-0.08	61.70
68.88	-0.0561	-20.71	82.97	-0.16	-0.08	62.02
68.89	-0.0567	-20.61	83.18	-0.16	-0.08	62.34
68.90	-0.0572	-20.51	83.40	-0.16	-0.08	62.65
68.91	-0.0577	-20.41	83.62	-0.16	-0.08	62.97
68.92	-0.0582	-20.31	83.84	-0.16	-0.08	63.29
68.93	-0.0587	-20.21	84.06	-0.16	-0.08	63.61
68.94	-0.0593	-20.11	84.28	-0.16	-0.08	63.92
68.95	-0.0598	-20.01	84.50	-0.16	-0.08	64.24
68.96	-0.0607	-20.24	85.63	-0.16	-0.09	65.13
68.97	-0.0624	-21.08	88.59	-0.17	-0.09	67.25
68.98	-0.0649	-22.29	92.84	-0.18	-0.09	70.28
68.99	-0.0675	-23.55	97.22	-0.18	-0.09	73.39
69.00	-0.0698	-24.70	101.20	-0.19	-0.10	76.20
69.01	-0.0697	-24.66	101.06	-0.19	-0.10	76.11
69.02	-0.0686	-24.96	100.69	-0.19	-0.10	75.45
69.03	-0.0682	-25.00	100.49	-0.19	-0.10	75.21
69.04	-0.0676	-25.13	100.27	-0.19	-0.10	74.86
69.05	-0.0671	-25.24	100.05	-0.19	-0.10	74.53
69.06	-0.0665	-25.33	99.82	-0.19	-0.09	74.20
69.07	-0.0660	-25.44	99.59	-0.19	-0.09	73.87
69.08	-0.0654	-25.55	99.36	-0.19	-0.09	73.54
69.09	-0.0649	-25.65	99.13	-0.19	-0.09	73.20
69.10	-0.0644	-25.75	98.91	-0.19	-0.09	72.87
69.11	-0.0638	-25.86	98.68	-0.19	-0.09	72.54
69.12	-0.0633	-25.96	98.45	-0.19	-0.09	72.21
69.13	-0.0627	-26.07	98.22	-0.18	-0.09	71.88
69.14	-0.0622	-26.17	97.99	-0.18	-0.09	71.55
69.15	-0.0617	-26.27	97.76	-0.18	-0.09	71.21
69.16	-0.0611	-26.38	97.53	-0.18	-0.09	70.88
69.17	-0.0606	-26.48	97.30	-0.18	-0.09	70.55
69.18	-0.0600	-26.59	97.08	-0.18	-0.09	70.22
69.19	-0.0595	-26.69	96.85	-0.18	-0.09	69.89
69.20	-0.0590	-26.79	96.62	-0.18	-0.09	69.56
69.21	-0.0584	-26.90	96.39	-0.18	-0.09	69.23
69.22	-0.0579	-27.00	96.16	-0.18	-0.08	68.89
69.23	-0.0573	-27.11	95.93	-0.18	-0.08	68.56
69.24	-0.0568	-27.21	95.70	-0.18	-0.08	68.23
69.25	-0.0563	-27.32	95.47	-0.18	-0.08	67.90
69.26	-0.0557	-27.42	95.24	-0.18	-0.08	67.56
69.27	-0.0552	-27.52	95.01	-0.18	-0.08	67.23
69.28	-0.0546	-27.62	94.77	-0.18	-0.08	66.89

69.29	-0.0539	-27.58	94.14	-0.18	-0.08	66.30
69.30	-0.0531	-27.48	93.28	-0.17	-0.08	65.54
69.31	-0.0522	-27.37	92.40	-0.17	-0.08	64.77
69.32	-0.0514	-27.26	91.51	-0.17	-0.08	64.01
69.33	-0.0506	-27.14	90.61	-0.17	-0.08	63.23
69.34	-0.0489	-26.31	87.78	-0.16	-0.07	61.23
69.35	-0.0460	-24.74	82.51	-0.15	-0.07	57.55
69.36	-0.0424	-22.83	76.10	-0.14	-0.06	53.06
69.37	-0.0390	-21.02	70.04	-0.13	-0.06	48.83
69.38	-0.0360	-19.43	64.73	-0.12	-0.05	45.13
69.39	-0.0332	-17.90	59.66	-0.11	-0.05	41.60
69.40	-0.0303	-16.32	54.40	-0.10	-0.05	37.93
69.41	-0.0272	-14.67	48.90	-0.09	-0.04	34.09
69.42	-0.0241	-13.01	43.36	-0.08	-0.04	30.23
69.43	-0.0211	-11.37	37.90	-0.07	-0.03	26.43
69.44	-0.0181	-9.76	32.52	-0.06	-0.03	22.67
69.45	-0.0151	-8.14	27.13	-0.05	-0.02	18.92
69.46	-0.0121	-6.51	21.71	-0.04	-0.02	15.14
69.47	-0.0091	-4.88	16.27	-0.03	-0.01	11.35
69.48	-0.0060	-3.25	10.84	-0.02	-0.01	7.56
69.49	-0.0030	-1.63	5.42	-0.01	0.00	3.78
69.50	0.0000	-0.01	0.00	0.00	0.00	-0.01
69.51	0.0029	-5.26	1.58	-0.01	-0.01	-3.70
69.52	0.0060	-10.76	3.24	-0.01	-0.02	-7.56
69.53	0.0091	-16.31	4.89	-0.01	-0.03	-11.46
69.54	0.0121	-21.75	6.53	-0.02	-0.04	-15.29
69.55	0.0151	-27.13	8.14	-0.02	-0.05	-19.07
69.56	0.0181	-32.52	9.76	-0.03	-0.06	-22.85
69.57	0.0211	-37.94	11.39	-0.03	-0.07	-26.66
69.58	0.0242	-43.38	13.02	-0.04	-0.08	-30.48
69.59	0.0272	-48.82	14.65	-0.04	-0.09	-34.30
69.60	0.0302	-54.24	16.27	-0.05	-0.10	-38.11
69.61	0.0332	-59.65	17.90	-0.05	-0.11	-41.91
69.62	0.0362	-65.07	19.53	-0.06	-0.12	-45.72
69.63	0.0393	-70.50	21.15	-0.06	-0.13	-49.53
69.64	0.0419	-74.69	22.27	-0.06	-0.14	-52.63
69.65	0.0425	-75.49	22.42	-0.06	-0.14	-53.27
69.66	0.0431	-76.14	22.54	-0.06	-0.14	-53.81
69.67	0.0441	-77.19	22.65	-0.07	-0.14	-54.75
69.68	0.0450	-78.05	22.76	-0.07	-0.15	-55.50
69.69	0.0456	-78.46	22.72	-0.07	-0.15	-55.96
69.70	0.0461	-78.75	22.64	-0.07	-0.15	-56.32
69.71	0.0467	-78.98	22.54	-0.07	-0.15	-56.66
69.72	0.0472	-79.21	22.44	-0.07	-0.15	-56.99
69.73	0.0478	-79.44	22.33	-0.07	-0.15	-57.33
69.74	0.0483	-79.67	22.23	-0.07	-0.15	-57.66
69.75	0.0488	-79.90	22.12	-0.07	-0.15	-58.00
69.76	0.0494	-80.13	22.02	-0.07	-0.15	-58.33
69.77	0.0499	-80.36	21.92	-0.07	-0.15	-58.66
69.78	0.0505	-80.58	21.81	-0.07	-0.15	-59.00
69.79	0.0510	-80.81	21.71	-0.07	-0.15	-59.33
69.80	0.0516	-81.04	21.60	-0.07	-0.15	-59.67
69.81	0.0521	-81.27	21.50	-0.08	-0.15	-60.00
69.82	0.0526	-81.50	21.39	-0.08	-0.15	-60.33
69.83	0.0532	-81.73	21.29	-0.08	-0.15	-60.67
69.84	0.0537	-81.96	21.19	-0.08	-0.15	-61.00
69.85	0.0543	-82.18	21.08	-0.08	-0.16	-61.34

69.86	0.0548	-82.41	20.98	-0.08	-0.16	-61.67
69.87	0.0553	-82.64	20.87	-0.08	-0.16	-62.00
69.88	0.0559	-82.87	20.77	-0.08	-0.16	-62.34
69.89	0.0564	-83.10	20.67	-0.08	-0.16	-62.67
69.90	0.0570	-83.33	20.56	-0.08	-0.16	-63.01
69.91	0.0575	-83.56	20.46	-0.08	-0.16	-63.34
69.92	0.0580	-83.79	20.35	-0.08	-0.16	-63.67
69.93	0.0586	-84.01	20.25	-0.08	-0.16	-64.01
69.94	0.0591	-84.24	20.14	-0.08	-0.16	-64.34
69.95	0.0597	-84.47	20.04	-0.08	-0.16	-64.68
69.96	0.0605	-85.32	20.16	-0.08	-0.16	-65.41
69.97	0.0621	-88.05	20.93	-0.09	-0.17	-67.38
69.98	0.0646	-92.36	22.16	-0.09	-0.18	-70.47
69.99	0.0674	-97.01	23.49	-0.09	-0.18	-73.80
70.00	0.0698	-101.24	24.71	-0.10	-0.19	-76.82
70.01	0.0697	-101.11	24.67	-0.10	-0.19	-76.73
70.02	0.0686	-100.73	24.97	-0.10	-0.19	-76.05
70.03	0.0681	-100.56	25.07	-0.10	-0.19	-75.78
70.04	0.0677	-100.32	25.11	-0.10	-0.19	-75.49
70.05	0.0671	-100.09	25.26	-0.10	-0.19	-75.12
70.06	0.0665	-99.86	25.35	-0.09	-0.19	-74.79
70.07	0.0660	-99.64	25.45	-0.09	-0.19	-74.47
70.08	0.0655	-99.40	25.56	-0.09	-0.19	-74.13
70.09	0.0649	-99.18	25.66	-0.09	-0.19	-73.79
70.10	0.0644	-98.95	25.77	-0.09	-0.19	-73.46
70.11	0.0638	-98.72	25.87	-0.09	-0.19	-73.13
70.12	0.0633	-98.49	25.98	-0.09	-0.19	-72.79
70.13	0.0628	-98.26	26.08	-0.09	-0.18	-72.46
70.14	0.0622	-98.03	26.18	-0.09	-0.18	-72.12
70.15	0.0617	-97.80	26.29	-0.09	-0.18	-71.79
70.16	0.0611	-97.57	26.39	-0.09	-0.18	-71.45
70.17	0.0606	-97.35	26.50	-0.09	-0.18	-71.12
70.18	0.0601	-97.12	26.60	-0.09	-0.18	-70.79
70.19	0.0595	-96.89	26.70	-0.09	-0.18	-70.45
70.20	0.0590	-96.66	26.81	-0.09	-0.18	-70.12
70.21	0.0584	-96.43	26.91	-0.09	-0.18	-69.78
70.22	0.0579	-96.20	27.02	-0.08	-0.18	-69.45
70.23	0.0574	-95.97	27.12	-0.08	-0.18	-69.12
70.24	0.0568	-95.74	27.23	-0.08	-0.18	-68.78
70.25	0.0563	-95.51	27.33	-0.08	-0.18	-68.45
70.26	0.0557	-95.28	27.43	-0.08	-0.18	-68.11
70.27	0.0552	-95.05	27.53	-0.08	-0.18	-67.77
70.28	0.0546	-94.81	27.63	-0.08	-0.18	-67.43
70.29	0.0539	-94.17	27.59	-0.08	-0.18	-66.84
70.30	0.0531	-93.31	27.49	-0.08	-0.17	-66.07
70.31	0.0522	-92.43	27.39	-0.08	-0.17	-65.30
70.32	0.0514	-91.55	27.27	-0.08	-0.17	-64.53
70.33	0.0506	-90.64	27.15	-0.08	-0.17	-63.74
70.34	0.0489	-87.80	26.32	-0.07	-0.16	-61.72
70.35	0.0460	-82.51	24.74	-0.07	-0.15	-57.99
70.36	0.0424	-76.10	22.83	-0.06	-0.14	-53.47
70.37	0.0390	-70.04	21.02	-0.06	-0.13	-49.21
70.38	0.0360	-64.73	19.43	-0.05	-0.12	-45.48
70.39	0.0332	-59.67	17.90	-0.05	-0.11	-41.93
70.40	0.0303	-54.40	16.32	-0.05	-0.10	-38.22
70.41	0.0272	-48.90	14.67	-0.04	-0.09	-34.36
70.42	0.0241	-43.36	13.01	-0.04	-0.08	-30.46

70.43	0.0211	-37.90	11.37	-0.03	-0.07	-26.63
70.44	0.0181	-32.52	9.76	-0.03	-0.06	-22.85
70.45	0.0151	-27.13	8.14	-0.02	-0.05	-19.06
70.46	0.0121	-21.71	6.51	-0.02	-0.04	-15.25
70.47	0.0091	-16.27	4.88	-0.01	-0.03	-11.43
70.48	0.0060	-10.84	3.25	-0.01	-0.02	-7.62
70.49	0.0030	-5.42	1.63	0.00	-0.01	-3.81
70.50	0.0000	0.00	0.01	0.00	0.00	0.00
70.51	-0.0029	-1.58	5.26	-0.01	-0.01	3.66
70.52	-0.0060	-3.24	10.76	-0.02	-0.01	7.50
70.53	-0.0091	-4.89	16.31	-0.03	-0.01	11.37
70.54	-0.0121	-6.53	21.76	-0.04	-0.02	15.17
70.55	-0.0151	-8.14	27.12	-0.05	-0.02	18.91
70.56	-0.0181	-9.75	32.50	-0.06	-0.03	22.66
70.57	-0.0211	-11.38	37.94	-0.07	-0.03	26.45
70.58	-0.0242	-13.02	43.39	-0.08	-0.04	30.25
70.59	-0.0272	-14.65	48.82	-0.09	-0.04	34.04
70.60	-0.0302	-16.27	54.24	-0.10	-0.05	37.81
70.61	-0.0332	-17.90	59.65	-0.11	-0.05	41.59
70.62	-0.0362	-19.53	65.07	-0.12	-0.06	45.37
70.63	-0.0393	-21.15	70.50	-0.13	-0.06	49.15
70.64	-0.0423	-22.78	75.92	-0.14	-0.06	52.94
70.65	-0.0453	-24.41	81.35	-0.15	-0.07	56.72
70.66	-0.0483	-26.04	86.77	-0.16	-0.07	60.50
70.67	-0.0504	-26.91	90.11	-0.17	-0.08	62.97
70.68	-0.0515	-27.20	91.46	-0.17	-0.08	64.02
70.69	-0.0522	-27.36	92.34	-0.17	-0.08	64.73
70.70	-0.0531	-27.48	93.27	-0.17	-0.08	65.53
70.71	-0.0539	-27.60	94.18	-0.18	-0.08	66.32
70.72	-0.0546	-27.58	94.69	-0.18	-0.08	66.84
70.73	-0.0552	-27.52	95.00	-0.18	-0.08	67.22
70.74	-0.0557	-27.42	95.24	-0.18	-0.08	67.56
70.75	-0.0563	-27.32	95.47	-0.18	-0.08	67.90
70.76	-0.0568	-27.21	95.70	-0.18	-0.08	68.23
70.77	-0.0573	-27.11	95.93	-0.18	-0.08	68.56
70.78	-0.0579	-27.00	96.16	-0.18	-0.08	68.89
70.79	-0.0584	-26.90	96.39	-0.18	-0.09	69.23
70.80	-0.0590	-26.79	96.62	-0.18	-0.09	69.56
70.81	-0.0595	-26.69	96.85	-0.18	-0.09	69.89
70.82	-0.0600	-26.59	97.08	-0.18	-0.09	70.22
70.83	-0.0606	-26.48	97.30	-0.18	-0.09	70.55
70.84	-0.0611	-26.38	97.53	-0.18	-0.09	70.88
70.85	-0.0617	-26.27	97.76	-0.18	-0.09	71.21
70.86	-0.0622	-26.17	97.99	-0.18	-0.09	71.55
70.87	-0.0627	-26.07	98.22	-0.18	-0.09	71.88
70.88	-0.0633	-25.96	98.45	-0.19	-0.09	72.21
70.89	-0.0638	-25.86	98.68	-0.19	-0.09	72.54
70.90	-0.0644	-25.75	98.91	-0.19	-0.09	72.87
70.91	-0.0649	-25.65	99.13	-0.19	-0.09	73.20
70.92	-0.0654	-25.55	99.36	-0.19	-0.09	73.54
70.93	-0.0660	-25.44	99.59	-0.19	-0.09	73.87
70.94	-0.0665	-25.34	99.82	-0.19	-0.09	74.20
70.95	-0.0671	-25.23	100.05	-0.19	-0.10	74.53
70.96	-0.0676	-25.13	100.28	-0.19	-0.10	74.86
70.97	-0.0681	-25.02	100.51	-0.19	-0.10	75.20
70.98	-0.0687	-24.92	100.73	-0.19	-0.10	75.53
70.99	-0.0692	-24.82	100.96	-0.19	-0.10	75.86

71.00	-0.0700	-24.91	101.73	-0.19	-0.10	76.53
71.01	-0.0697	-24.90	101.51	-0.19	-0.10	76.33
71.02	-0.0689	-25.10	101.21	-0.19	-0.10	75.82
71.03	-0.0684	-25.18	100.99	-0.19	-0.10	75.53
71.04	-0.0678	-25.29	100.77	-0.19	-0.10	75.19
71.05	-0.0673	-25.40	100.54	-0.19	-0.10	74.85
71.06	-0.0668	-25.50	100.31	-0.19	-0.10	74.53
71.07	-0.0662	-25.60	100.08	-0.19	-0.09	74.19
71.08	-0.0657	-25.71	99.86	-0.19	-0.09	73.86
71.09	-0.0651	-25.81	99.63	-0.19	-0.09	73.53
71.10	-0.0646	-25.92	99.40	-0.19	-0.09	73.20
71.11	-0.0641	-26.02	99.17	-0.19	-0.09	72.87
71.12	-0.0635	-26.13	98.94	-0.19	-0.09	72.54
71.13	-0.0630	-26.23	98.71	-0.19	-0.09	72.20
71.14	-0.0624	-26.33	98.48	-0.19	-0.09	71.87
71.15	-0.0619	-26.44	98.25	-0.18	-0.09	71.54
71.16	-0.0614	-26.54	98.02	-0.18	-0.09	71.21
71.17	-0.0608	-26.65	97.80	-0.18	-0.09	70.88
71.18	-0.0603	-26.75	97.57	-0.18	-0.09	70.55
71.19	-0.0597	-26.85	97.34	-0.18	-0.09	70.22
71.20	-0.0592	-26.96	97.11	-0.18	-0.09	69.88
71.21	-0.0587	-27.06	96.88	-0.18	-0.09	69.55
71.22	-0.0581	-27.17	96.65	-0.18	-0.09	69.22
71.23	-0.0576	-27.27	96.42	-0.18	-0.08	68.89
71.24	-0.0570	-27.38	96.20	-0.18	-0.08	68.56
71.25	-0.0565	-27.48	95.96	-0.18	-0.08	68.22
71.26	-0.0559	-27.58	95.73	-0.18	-0.08	67.89
71.27	-0.0554	-27.68	95.50	-0.18	-0.08	67.55
71.28	-0.0549	-27.78	95.25	-0.18	-0.08	67.21
71.29	-0.0541	-27.73	94.58	-0.18	-0.08	66.60
71.30	-0.0533	-27.62	93.70	-0.17	-0.08	65.82
71.31	-0.0524	-27.52	92.82	-0.17	-0.08	65.05
71.32	-0.0516	-27.40	91.94	-0.17	-0.08	64.29
71.33	-0.0507	-27.23	90.89	-0.17	-0.08	63.42
71.34	-0.0489	-26.33	87.84	-0.16	-0.07	61.27
71.35	-0.0459	-24.70	82.35	-0.15	-0.07	57.43
71.36	-0.0422	-22.73	75.75	-0.14	-0.06	52.81
71.37	-0.0389	-20.95	69.79	-0.13	-0.06	48.65
71.38	-0.0360	-19.42	64.69	-0.12	-0.05	45.10
71.39	-0.0333	-17.93	59.75	-0.11	-0.05	41.66
71.40	-0.0303	-16.34	54.46	-0.10	-0.05	37.97
71.41	-0.0272	-14.67	48.90	-0.09	-0.04	34.09
71.42	-0.0241	-13.00	43.33	-0.08	-0.04	30.21
71.43	-0.0211	-11.37	37.89	-0.07	-0.03	26.41
71.44	-0.0181	-9.76	32.52	-0.06	-0.03	22.67
71.45	-0.0151	-8.14	27.14	-0.05	-0.02	18.92
71.46	-0.0121	-6.52	21.71	-0.04	-0.02	15.14
71.47	-0.0091	-4.88	16.27	-0.03	-0.01	11.34
71.48	-0.0060	-3.25	10.84	-0.02	-0.01	7.56
71.49	-0.0030	-1.63	5.42	-0.01	0.00	3.78
71.50	0.0000	-0.01	0.02	0.00	0.00	0.00
71.51	0.0029	-5.25	1.58	-0.01	-0.01	-3.69
71.52	0.0060	-10.78	3.24	-0.01	-0.02	-7.58
71.53	0.0091	-16.33	4.89	-0.01	-0.03	-11.48
71.54	0.0121	-21.75	6.53	-0.02	-0.04	-15.29
71.55	0.0151	-27.11	8.14	-0.02	-0.05	-19.05
71.56	0.0181	-32.51	9.76	-0.03	-0.06	-22.84

71.57	0.0211	-37.94	11.39	-0.03	-0.07	-26.66
71.58	0.0242	-43.39	13.02	-0.04	-0.08	-30.49
71.59	0.0272	-48.82	14.65	-0.04	-0.09	-34.30
71.60	0.0302	-54.23	16.27	-0.05	-0.10	-38.11
71.61	0.0332	-59.65	17.90	-0.05	-0.11	-41.91
71.62	0.0362	-65.07	19.53	-0.06	-0.12	-45.72
71.63	0.0393	-70.50	21.15	-0.06	-0.13	-49.53
71.64	0.0423	-75.92	22.78	-0.06	-0.14	-53.35
71.65	0.0453	-81.35	24.41	-0.07	-0.15	-57.16
71.66	0.0483	-86.77	26.04	-0.07	-0.16	-60.97
71.67	0.0509	-90.89	27.12	-0.08	-0.17	-64.01
71.68	0.0515	-91.65	27.27	-0.08	-0.17	-64.63
71.69	0.0521	-92.32	27.39	-0.08	-0.17	-65.18
71.70	0.0531	-93.36	27.50	-0.08	-0.17	-66.12
71.71	0.0540	-94.23	27.61	-0.08	-0.18	-66.87
71.72	0.0546	-94.73	27.60	-0.08	-0.18	-67.38
71.73	0.0552	-95.03	27.52	-0.08	-0.18	-67.76
71.74	0.0557	-95.28	27.43	-0.08	-0.18	-68.11
71.75	0.0563	-95.51	27.33	-0.08	-0.18	-68.45
71.76	0.0568	-95.74	27.22	-0.08	-0.18	-68.78
71.77	0.0574	-95.97	27.12	-0.08	-0.18	-69.12
71.78	0.0579	-96.20	27.02	-0.08	-0.18	-69.45
71.79	0.0584	-96.43	26.91	-0.09	-0.18	-69.78
71.80	0.0590	-96.66	26.81	-0.09	-0.18	-70.12
71.81	0.0595	-96.89	26.70	-0.09	-0.18	-70.45
71.82	0.0601	-97.12	26.60	-0.09	-0.18	-70.79
71.83	0.0606	-97.35	26.50	-0.09	-0.18	-71.12
71.84	0.0611	-97.57	26.39	-0.09	-0.18	-71.45
71.85	0.0617	-97.80	26.29	-0.09	-0.18	-71.79
71.86	0.0622	-98.03	26.18	-0.09	-0.18	-72.12
71.87	0.0628	-98.26	26.08	-0.09	-0.18	-72.46
71.88	0.0633	-98.49	25.98	-0.09	-0.19	-72.79
71.89	0.0638	-98.72	25.87	-0.09	-0.19	-73.13
71.90	0.0644	-98.95	25.77	-0.09	-0.19	-73.46
71.91	0.0649	-99.18	25.66	-0.09	-0.19	-73.79
71.92	0.0655	-99.40	25.56	-0.09	-0.19	-74.13
71.93	0.0660	-99.63	25.46	-0.09	-0.19	-74.46
71.94	0.0665	-99.86	25.35	-0.09	-0.19	-74.79
71.95	0.0671	-100.09	25.25	-0.10	-0.19	-75.13
71.96	0.0676	-100.32	25.14	-0.10	-0.19	-75.46
71.97	0.0682	-100.55	25.04	-0.10	-0.19	-75.80
71.98	0.0687	-100.78	24.93	-0.10	-0.19	-76.13
71.99	0.0692	-101.00	24.83	-0.10	-0.19	-76.46
72.00	0.0700	-101.75	24.91	-0.10	-0.19	-77.13
72.01	0.0699	-101.64	24.87	-0.10	-0.19	-77.06
72.02	0.0694	-101.46	25.00	-0.10	-0.19	-76.75
72.03	0.0692	-101.36	25.03	-0.10	-0.19	-76.62
72.04	0.0689	-101.25	25.09	-0.10	-0.19	-76.45
72.05	0.0687	-101.13	25.15	-0.10	-0.19	-76.28
72.06	0.0684	-101.02	25.19	-0.10	-0.19	-76.11
72.07	0.0681	-100.90	25.25	-0.10	-0.19	-75.95
72.08	0.0678	-100.79	25.30	-0.10	-0.19	-75.78
72.09	0.0676	-100.68	25.35	-0.10	-0.19	-75.61
72.10	0.0673	-100.56	25.40	-0.10	-0.19	-75.44
72.11	0.0670	-100.45	25.46	-0.10	-0.19	-75.28
72.12	0.0668	-100.33	25.51	-0.10	-0.19	-75.11
72.13	0.0665	-100.22	25.56	-0.09	-0.19	-74.94

72.14	0.0662	-100.10	25.61	-0.09	-0.19	-74.78
72.15	0.0660	-99.99	25.66	-0.09	-0.19	-74.61
72.16	0.0657	-99.88	25.72	-0.09	-0.19	-74.44
72.17	0.0654	-99.76	25.77	-0.09	-0.19	-74.27
72.18	0.0651	-99.65	25.82	-0.09	-0.19	-74.11
72.19	0.0649	-99.53	25.87	-0.09	-0.19	-73.94
72.20	0.0646	-99.42	25.92	-0.09	-0.19	-73.77
72.21	0.0643	-99.30	25.98	-0.09	-0.19	-73.61
72.22	0.0641	-99.19	26.03	-0.09	-0.19	-73.44
72.23	0.0638	-99.07	26.08	-0.09	-0.19	-73.27
72.24	0.0635	-98.96	26.13	-0.09	-0.19	-73.11
72.25	0.0633	-98.85	26.18	-0.09	-0.19	-72.94
72.26	0.0630	-98.73	26.24	-0.09	-0.19	-72.77
72.27	0.0627	-98.62	26.29	-0.09	-0.19	-72.61
72.28	0.0624	-98.50	26.34	-0.09	-0.19	-72.44
72.29	0.0622	-98.39	26.39	-0.09	-0.18	-72.27
72.30	0.0619	-98.27	26.44	-0.09	-0.18	-72.10
72.31	0.0616	-98.16	26.50	-0.09	-0.18	-71.94
72.32	0.0614	-98.05	26.55	-0.09	-0.18	-71.77
72.33	0.0611	-97.93	26.60	-0.09	-0.18	-71.60
72.34	0.0608	-97.82	26.65	-0.09	-0.18	-71.43
72.35	0.0606	-97.70	26.71	-0.09	-0.18	-71.27
72.36	0.0603	-97.59	26.76	-0.09	-0.18	-71.10
72.37	0.0600	-97.47	26.81	-0.09	-0.18	-70.93
72.38	0.0597	-97.36	26.86	-0.09	-0.18	-70.77
72.39	0.0595	-97.25	26.91	-0.09	-0.18	-70.60
72.40	0.0592	-97.13	26.97	-0.09	-0.18	-70.43
72.41	0.0589	-97.02	27.02	-0.09	-0.18	-70.27
72.42	0.0587	-96.90	27.07	-0.09	-0.18	-70.10
72.43	0.0584	-96.79	27.12	-0.09	-0.18	-69.93
72.44	0.0581	-96.67	27.17	-0.09	-0.18	-69.76
72.45	0.0578	-96.56	27.23	-0.09	-0.18	-69.60
72.46	0.0576	-96.45	27.28	-0.08	-0.18	-69.43
72.47	0.0573	-96.33	27.33	-0.08	-0.18	-69.26
72.48	0.0570	-96.22	27.38	-0.08	-0.18	-69.10
72.49	0.0568	-96.10	27.43	-0.08	-0.18	-68.93
72.50	0.0565	-95.99	27.49	-0.08	-0.18	-68.76
72.51	0.0562	-95.87	27.54	-0.08	-0.18	-68.59
72.52	0.0560	-95.75	27.59	-0.08	-0.18	-68.43
72.53	0.0557	-95.64	27.64	-0.08	-0.18	-68.26
72.54	0.0554	-95.52	27.69	-0.08	-0.18	-68.09
72.55	0.0551	-95.40	27.74	-0.08	-0.18	-67.92
72.56	0.0549	-95.28	27.79	-0.08	-0.18	-67.75
72.57	0.0545	-95.01	27.79	-0.08	-0.18	-67.48
72.58	0.0541	-94.60	27.74	-0.08	-0.18	-67.12
72.59	0.0537	-94.16	27.69	-0.08	-0.18	-66.73
72.60	0.0533	-93.73	27.64	-0.08	-0.17	-66.35
72.61	0.0529	-93.29	27.58	-0.08	-0.17	-65.96
72.62	0.0525	-92.85	27.52	-0.08	-0.17	-65.58
72.63	0.0520	-92.40	27.46	-0.08	-0.17	-65.19
72.64	0.0516	-91.96	27.41	-0.08	-0.17	-64.80
72.65	0.0512	-91.51	27.35	-0.08	-0.17	-64.41
72.66	0.0508	-91.05	27.28	-0.08	-0.17	-64.01
72.67	0.0500	-89.78	26.93	-0.08	-0.17	-63.10
72.68	0.0486	-87.34	26.20	-0.07	-0.16	-61.38
72.69	0.0469	-84.23	25.27	-0.07	-0.16	-59.18
72.70	0.0452	-81.17	24.36	-0.07	-0.15	-57.03

72.71	0.0437	-78.45	23.54	-0.07	-0.15	-55.12
72.72	0.0423	-75.90	22.78	-0.06	-0.14	-53.33
72.73	0.0408	-73.28	21.99	-0.06	-0.14	-51.49
72.74	0.0393	-70.55	21.17	-0.06	-0.13	-49.57
72.75	0.0377	-67.78	20.34	-0.06	-0.13	-47.63
72.76	0.0362	-65.05	19.52	-0.06	-0.12	-45.71
72.77	0.0347	-62.35	18.71	-0.05	-0.12	-43.81
72.78	0.0332	-59.66	17.90	-0.05	-0.11	-41.92
72.79	0.0317	-56.95	17.09	-0.05	-0.11	-40.01
72.80	0.0302	-54.23	16.27	-0.05	-0.10	-38.11
72.81	0.0287	-51.51	15.46	-0.04	-0.10	-36.20
72.82	0.0272	-48.80	14.64	-0.04	-0.09	-34.29
72.83	0.0257	-46.09	13.83	-0.04	-0.09	-32.39
72.84	0.0242	-43.39	13.02	-0.04	-0.08	-30.48
72.85	0.0227	-40.67	12.20	-0.03	-0.08	-28.58
72.86	0.0211	-37.96	11.39	-0.03	-0.07	-26.67
72.87	0.0196	-35.25	10.58	-0.03	-0.07	-24.77
72.88	0.0181	-32.54	9.76	-0.03	-0.06	-22.86
72.89	0.0166	-29.83	8.95	-0.03	-0.06	-20.96
72.90	0.0151	-27.11	8.14	-0.02	-0.05	-19.05
72.91	0.0136	-24.40	7.32	-0.02	-0.05	-17.15
72.92	0.0121	-21.69	6.51	-0.02	-0.04	-15.24
72.93	0.0106	-18.98	5.70	-0.02	-0.04	-13.34
72.94	0.0091	-16.27	4.88	-0.01	-0.03	-11.43
72.95	0.0076	-13.56	4.07	-0.01	-0.03	-9.53
72.96	0.0060	-10.85	3.25	-0.01	-0.02	-7.62
72.97	0.0045	-8.13	2.44	-0.01	-0.02	-5.71
72.98	0.0030	-5.42	1.63	0.00	-0.01	-3.81
72.99	0.0015	-2.71	0.81	0.00	-0.01	-1.90
73.00	0.0000	0.00	0.00	0.00	0.00	0.00

REFERENCES

American Institute of Steel Construction (AISC). (2016a). *Prequalified Connections for Special and Intermediate Steel Moment Frames for Seismic Applications (ANSI/AISC 358-16)*. Chicago, IL: American Institute of Steel Construction.

American Institute of Steel Construction (AISC). (2016b). *Seismic Provisions for Structural Steel Buildings (ANSI/AISC 341-16)*. Chicago, IL: American Institute of Steel Construction.

American Institute of Steel Construction (AISC). (2016c). *Specification for Structural Steel Buildings (ANSI/AISC 360-16)*. Chicago, IL: American Institute of Steel Construction.

American Institute of Steel Construction (AISC). (2017). *Steel Construction Manual (15th Ed.)*. Chicago, IL: American Institute of Steel Construction.

American Welding Society. (2016). *Structural Welding Code – Seismic Supplement (AWS D1.8/D1.8M:2016)*. American Welding Society.

American Society of Civil Engineers (ASCE). (2017). *Minimum Design Loads and Associated Criteria for Buildings and Other Structures*. Reston, VA: American Society of Civil Engineers.

Applied Technology Council. (2006). *Next-Generation Performance-Based Seismic Design Guidelines (FEMA-445)*. Redwood City, CA: Applied Technology Council.

Applied Technology Council. (1995). *Structural Response Modification Factors (ATC 19)*. Redwood City, CA: Applied Technology Council.

Applied Technology Council. (1978). *Tentative Provisions for the Development of Seismic Regulations for Buildings (ATC-3-06)*. Washington DC: Applied Technology Council.

Applied Technology Council. (2010). *Quantification of Building Seismic Performance Factors (FEMA P-695)*. North Charleston, SC: Federal Emergency Management Agency.

Applied Technology Council. (2011). *Quantification of Building Seismic Performance Factors: Component Equivalency Methodology (FEMA P-795)*. North Charleston, SC: Federal Emergency Management Agency.

ASTM International. (2021). ASTM F1554-07a: Standard Specification for Anchor Bolts, Steel, 36, 55, and 105-ksi Yield Strength. *Annual Book of ASTM Standards (2021)*. West Conshohocken, PA: American Society for Testing and Materials.

Computers and Structures, Inc. (2017). *CSI Analysis Reference Manual For SAP2000, ETABS, SAFE, and CSIBridge*. Berkley, CA: Computers & Structures, Inc.

Donald Brandt, G. (1982). Rapid Determination of Ultimate Strength of Eccentrically Loaded Bolt Groups. *Engineering Journal, Second Quarter*, 94-100.

DuraFuse Frames. (n.d.). About. https://www.durafuseframes.com/about/

Engelhardt, M., Winneberger, T., Zekany, A., and Potyraj, T. (1998). Experimental Investigation of Dogbone Moment Connections. Engineering Journal, Fourth Quarter, 128-139.

Federal Emergency Management Agency. (2009). *Effects of Strength and Stiffness Degradation on Seismic Response (FEMA P440A)*. North Charleston, SC: Federal Emergency Management Agency.

Federal Emergency Management Agency. (2004). *NEHRP Recommended Provisions for Seismic Regulations for New Buildings and Other Structures*. Washington DC: National Institute of Building Sciences.

Freddi, Fabio, Dimopoulos, Christoforos A., Karavasilis, Theodore L. (2020). Experimental Evaluation of a Rocking Damage-Free Steel Column Base with Friction Devices. Journal of Structural Engineering, 146 (10), 04020217-1 – 04020217-20.

Hu, Jong Wan. (2013). Design Motivation, Mechanical Modeling and Nonlinear Analysis of Composite PR Moment Frames with Smart SMA Connection Systems. Advanced Steel Construction, 9 (4), 334-349.

International Association of Plumbing and Mechanical Officials. (2017). *Uniform Evaluation Service Report 164*. Ontario, CA: International Associate of Plumbing and Mechanical Officials.

International Code Council. (2017). *2018 International Building Code*. Country Club Hills, IL: International Code Council.

Mander, Thomas J., Rodgers, Geoffrey W., Chase, Geoffrey J., Mander, John B., MacRae, Gregory A. (2009). Damage Avoidance Design Steel Beam-Column Moment Connection Using High-Force-To-Volume Dissipators. Journal of Structural Engineering, 135 (11), 1390-1397.

McClure, Frank E. (2006). *Modern Earthquake Codes, History and Development, A Historical Review from an Eye Witness*. Berkley, CA: Computers & Structures, Inc.

Plumier, Andre. (1997). The Dogbone: Back to the Future. Engineering Journal, Second Quarter, 61-67.

Ricles, James M., Sause, Richard, Garlock, Maria M., Zhao, Chen. (2001). Posttensioned Seismic-Resistant Connections for Steel Frames. Journal of Structural Engineering, 127 (2), 113-121.

Strongtie. (n.d.). *Structural Engineering Blog*. https://seblog.strongtie.com/2016/05/simpson-strong-tie-strong-wall-wood-shearwall-the-latest-in-our-prefabricated-shearwall-panel-line-part-2/

Takeda T., Sozen M., and Nielsen, N. (1970). *Reinforced Concrete Response to Simulated Earthquakes*. Journal of the Structural Division, 96 (12), 2557-2573.

Vulcraft. (2020a). Vulcraft Steel Deck. Vulcraft.

Vulcraft. (2020b). Vulcraft Steel Joist and Joist Girder Systems. Vulcraft.

CURRICULUM VITAE

Michael Kempfert

Place of birth: Manitowoc, WI

Education

B.S., Milwaukee School of Engineering, November 2000
Major: Architectural Engineering

M.S., Milwaukee School of Engineering, February 2004
Major: Structural Engineering

Dissertation Title: A New Connection Type for Use in Ordinary, Intermediate, or Special moment Frames

Teaching Experience: Milwaukee School of Engineering, Lecturer

Courses taught:
- Soil Mechanics and Foundations
- Mechanics of Materials I
- Mechanics of Materials II
- Building Construction Methods
- Principals of Structural Steel and Reinforced Concrete Design
- Principals of Structural Engineering
- Steel Design
- Senior Design II
- Senior Design III

Presentations:
- Drawing Details: The Good, The Bad, and The Ugly
- Structural Provisions in the Building Code and Referenced Standards